dnd

unico
system

U

minimal,
elegant,
Unico

dnd

Sistema Unico per porta
Unico system for door

san
ZNE

Sistema Unico per finestra
Unico system for window

U

ginkgo
OCS

Il sistema Unico
Unico, the system

Unico è il nuovo sistema per porte – ideato da Dnd – che riduce al minimo l'impatto visivo della rosetta sulla maniglia, valorizzandone così il design: una soluzione tecnica ed estetica ideale per gli ambienti contemporanei.
Grazie al suo piccolo volume, risulta poco visibile: misura solo 30 mm di diametro e 2 mm di spessore.
Il sistema, proposto in forma rotonda, è facile da installare e prevede la realizzazione di un foro da 22 mm sulla porta.

Unico is the new system for doors – designed by Dnd – that minimises the visual impact of the rose on the handle, thus enhancing its design: a technical and aesthetic solution that is ideal for contemporary interiors.
Thanks to its small volume, it is hardly visible: it measures only 30 mm in diameter and 2 mm in thickness.
The system, which comes in a round shape, is easy to install and requires a 22 mm hole to be drilled in the door.

nottolino e bocchette
turn & release and escutcheons

2413+A

BD80Y

BD80P

anik
ONO

Sistema Unico disponibile anche per finestre
Unico System available also for windows

Il nuovo sistema Unico è disponibile anche per serramenti, su cui la discrezione della rosetta – di soli 34 mm di diametro e 10 mm di spessore – esalta pienamente la forma e il disegno della maniglia.
Sistema DK a 8 scatti, facile da installare con la realizzazione di un foro da 13 mm sul serramento.

The new Unico system is also available for windows, where the discretion of the rose – just 34 mm in diameter and 10 mm in thickness – fully enhances the shape and design of the handle.
DK 8 position-system, easy to install by drilling a 13 mm hole in the frame.

luce p
ZCS

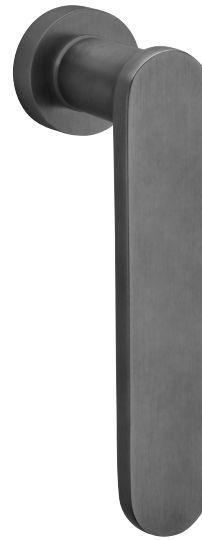

short
PGS | ***forte***®

san
ZCS

U

Il sistema Unico è disponibile su 35 modelli in tutte le loro finiture

Unico, the system is available on 35 models in all their finishes

ellipse new

ellipse brilliant new

crisalide new

crisalide mini new

dune new

anik new

anik brilliant new

anik line new

leva new

leva mirror new

san

eleonora

DUE

levante

drop

blend

viva!

zeppelin

madeleine

boole

iki

ginkgo

ginkgo biloba

isabella

luxury

aretè

aretè L

luce p

luce

short

chop

sochic

art

linear

project

ellipse NEW

design:
Gabriele & Oscar Buratti

made in italy

IP80
PVD-SH | ***forte***®

Ottone
Brass

U

PVD-BG | *forte*®
Oro antico lucido
Antique bright gold

PVD-SG | *forte*®
Oro antico satinato
Antique satin gold

PVD-SH | *forte*® new
Oro champagne satinato
Champagne satin gold

PVD-BB | *forte*® new
Bronzo lucido
Bright bronze

PVD-SB | *forte*® new
Bronzo satinato
Satin bronze

PVN | *forte*® new
Nickel lucido
Bright nickel

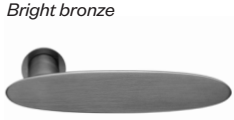

PGS | *forte*®
Grafite satinato
Satin graphite

BSO
Bronzo sabbiato opaco
Matt sandblasted bronze

OC
Cromo lucido
Polished chrome

OCS
Cromo satinato
Satin chrome

ONO
Nero
Black

---

coordinato per finestra
window complement

U **IP22U**

ellipse brilliant NEW

design:
Gabriele & Oscar Buratti

made in italy

IB80
PVD-BB | ***forte***®

Ottone
Brass

U

PVD-BG | *forte*®
Oro antico lucido
Antique bright gold

PVD-SG | *forte*®
Oro antico satinato
Antique satin gold

PVD-SH | *forte*® new
Oro champagne satinato
Champagne satin gold

PVD-BB | *forte*® new
Bronzo lucido
Bright bronze

PVD-SB | *forte*® new
Bronzo satinato
Satin bronze

PVN | *forte*® new
Nickel lucido
Bright nickel

BSO
Bronzo sabbiato opaco
Matt sandblasted bronze

OC
Cromo lucido
Polished chrome

OCS
Cromo satinato
Satin chrome

ONO
Nero
Black

---

coordinato per finestra
window complement

U **IB22U**

crisalide NEW

design:
Elena Salmistraro

made in italy

CS80
AVP + PSD

archiproducts
AWARDS
WINNER
2023

Alluminio + porcellana
Aluminium + porcelain

U

ARO + PSD
Oro satinato + porcellana lucida decorata
Satin gold + decorated glossy porcelain

AVP + PSD
Violetto pastello + porcellana lucida decorata
Pastel violet + decorated glossy porcelain

ARO + PSW
Oro satinato + porcellana lucida bianca
Satin gold + white glossy porcelain

ABN + PSD
Bianco + porcellana lucida decorata
White + decorated glossy porcelain

ABC + PSD
Blu colomba + porcellana lucida decorata
Blue dove + decorated glossy porcelain

ANE + PSW
Nero + porcellana lucida bianca
Black + white glossy porcelain

ANE + PSD
Nero + porcellana lucida decorata
Black + decorated glossy porcelain

---

coordinato per finestra
window complement

U **CS22U**

crisalide mini NEW

design:
Elena Salmistraro

made in italy

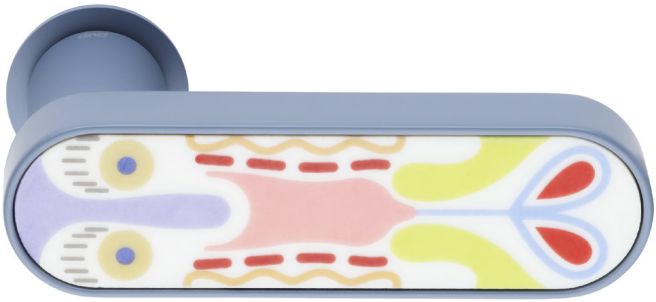

CM80
ABC + PSD

Alluminio + porcellana
Aluminium + porcelain

U

ARO + PSD
Oro satinato + porcellana lucida decorata
Satin gold + decorated glossy porcelain

AVP + PSD
Violetto pastello + porcellana lucida decorata
Pastel violet + decorated glossy porcelain

ARO + PSW
Oro satinato + porcellana lucida bianca
Satin gold + white glossy porcelain

ABN + PSD
Bianco + porcellana lucida decorata
White + decorated glossy porcelain

ABC + PSD
Blu colomba + porcellana lucida decorata
Blue dove + decorated glossy porcelain

ANE + PSW
Nero + porcellana lucida bianca
Black + white glossy porcelain

ANE + PSD
Nero + porcellana lucida decorata
Black + decorated glossy porcelain

---

coordinato per finestra
window complement

U **CM22U**

dune NEW

design:
Elena Salmistraro

made in italy

DN80
ONO + PSB

Ottone + porcellana lucida bianco sabbia
Brass + sand-white glossy porcelain

U

PVD-BG | *forte*® + PSB
Oro antico lucido
Antique bright gold

PVD-SG | *forte*® + PSB
Oro antico satinato
Antique satin gold

PVD-SCB | *forte*® + PSB
Rame satinato
Satin copper

OBN + PSB **new**
Bianco
White

ONO + PSB
Nero
Black

---

coordinato per finestra
window complement

U **DN22U**

dune NEW

design:
Elena Salmistraro

made in italy

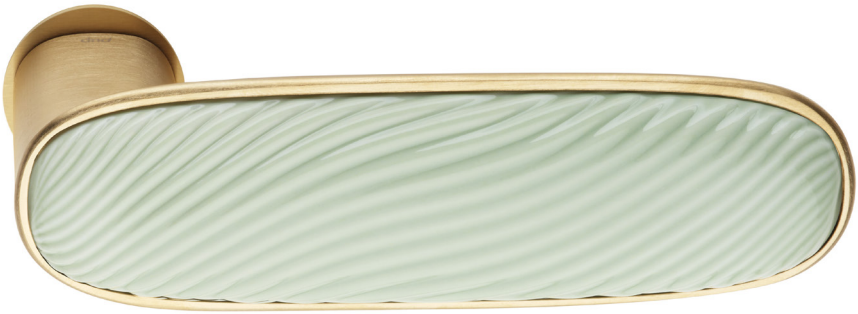

DN80
PVD-SG | ***forte***® + PSV

Ottone + porcellana lucida verde menta
Brass + mint-green glossy porcelain

U

PVD-BG | *forte*® + PSV
Oro antico lucido
Antique bright gold

PVD-SG | *forte*® + PSV
Oro antico satinato
Antique satin gold

PVD-SCB | *forte*® + PSV
Rame satinato
Satin copper

OBN + PSV **new**
Bianco
White

ONO + PSV
Nero
Black

---

coordinato per finestra
window complement

U **DN22U**

dune NEW

design:
Elena Salmistraro

made in italy

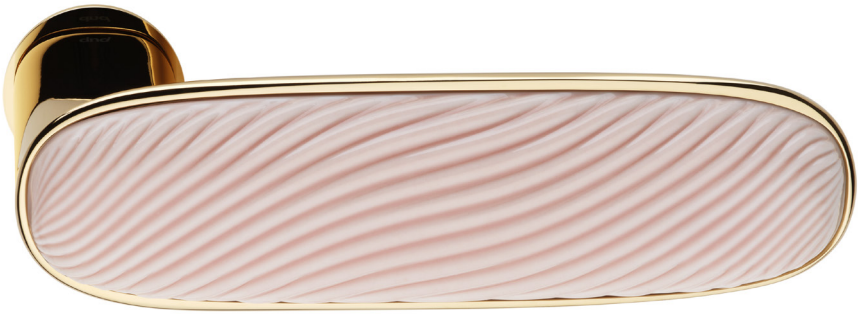

DN80
PVD-BG | ***forte***® + PSR

Ottone + porcellana lucida rosa nuvola
Brass + cloud-pink glossy porcelain

U

PVD-BG | *forte*® + PSR
Oro antico lucido
Antique bright gold

PVD-SG | *forte*® + PSR
Oro antico satinato
Antique satin gold

PVD-SCB | *forte*® + PSR
Rame satinato
Satin copper

OBN + PSR **new**
Bianco
White

ONO + PSR
Nero
Black

---

coordinato per finestra
window complement

U **DN22U**

anik NEW

design:
Gabriele & Oscar Buratti

made in italy

AK80
OCS

Ottone
Brass

U

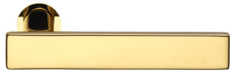

PVD-BG | *forte*®
Oro antico lucido
Antique bright gold

PVD-SG | *forte*®
Oro antico satinato
Antique satin gold

PVD-SH | *forte*® new
Oro champagne satinato
Champagne satin gold

PVD-BB | *forte*® new
Bronzo lucido
Bright bronze

PVD-SB | *forte*® new
Bronzo satinato
Satin bronze

PVN | *forte*® new
Nickel lucido
Bright nickel

PGS | *forte*®
Grafite satinato
Satin graphite

BSO
Bronzo sabbiato opaco
Matt sandblasted bronze

OC new
Cromo lucido
Polished chrome

OCS
Cromo satinato
Satin chrome

ONO
Nero
Black

---

coordinato per finestra
window complement

U **AK22U**

anik brilliant NEW

design:
Gabriele & Oscar Buratti

made in italy

AB80
BSO

Ottone
Brass

U

PVD-BG | *forte*®
Oro antico lucido
Antique bright gold

PVD-SG | *forte*®
Oro antico satinato
Antique satin gold

PVD-SH | *forte*® new
Oro champagne satinato
Champagne satin gold

PVD-BB | *forte*® new
Bronzo lucido
Bright bronze

PVD-SB | *forte*® new
Bronzo satinato
Satin bronze

PVN | *forte*® new
Nickel lucido
Bright nickel

BSO
Bronzo sabbiato opaco
Matt sandblasted bronze

OC new
Cromo lucido
Polished chrome

OCS
Cromo satinato
Satin chrome

ONO
Nero
Black

---

coordinato per finestra
window complement

U **AB22U**

anik line NEW

design:
Gabriele & Oscar Buratti

made in italy

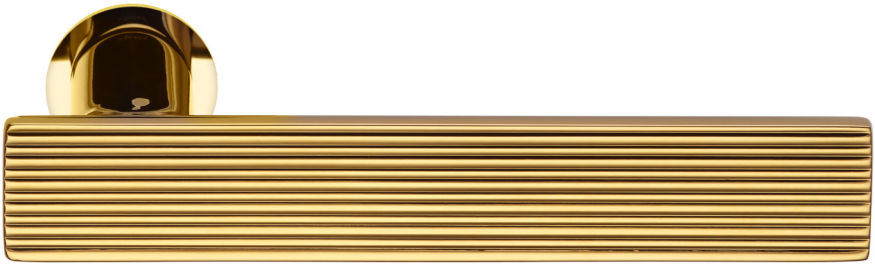

AE80
PVD-BG | ***forte***®

Ottone
Brass

U

PVD-BG | *forte*®
Oro antico lucido
Antique bright gold

PVD-SG | *forte*®
Oro antico satinato
Antique satin gold

PVD-SH | *forte*® new
Oro champagne satinato
Champagne satin gold

PVD-BB | *forte*® new
Bronzo lucido
Bright bronze

PVD-SB | *forte*® new
Bronzo satinato
Satin bronze

PVN | *forte*® new
Nickel lucido
Bright nickel

BSO
Bronzo sabbiato opaco
Matt sandblasted bronze

OC new
Cromo lucido
Polished chrome

OCS
Cromo satinato
Satin chrome

ONO
Nero
Black

---

coordinato per finestra
window complement

U **AE22U**

leva NEW

design:
Park Associati

made in italy

MENZIONE D'ONORE
COMPASSO D'ORO ADI
2024

LV80
PVN | *forte*®

Ottone
Brass

U

PVD-SG | *forte*®
Oro antico satinato
Antique satin gold

PVD-SH | *forte*® new
Oro champagne satinato
Champagne satin gold

PVD-BB | *forte*® new
Bronzo lucido
Bright bronze

PVD-SB | *forte*® new
Bronzo satinato
Satin bronze

PVN | *forte*® new
Nickel lucido
Bright nickel

PGS | *forte*®
Grafite satinato
Satin graphite

OCS
Cromo satinato
Satin chrome

ONO
Nero
Black

---

coordinato per finestra
window complement

U **LV22U**

leva mirror NEW

design:
Park Associati

made in italy

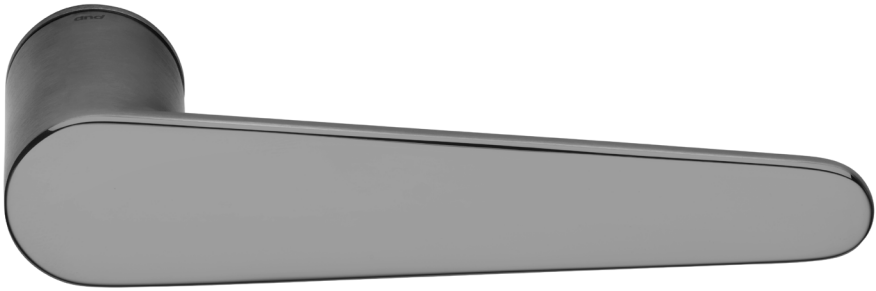

MENZIONE D'ONORE
COMPASSO D'ORO ADI
2024

LM80
PGM | *forte*®

Ottone
Brass

U

PVD-SBM | *forte*®
Oro antico satinato - Lucido
Antique satin gold - Bright

PVD-BBM | *forte*® new
Bronzo satinato - Lucido
Satin bronze - Bright

PGM | *forte*®
Grafite satinato - Lucido
Satin graphite - Bright

CCS
Cromo - Cromo satinato
Chrome - Satin chrome

---

coordinato per finestra
window complement

U **LM22U**

san

design:
Philippe Tabet

made in italy

SN80
ZCS

Zama
Zamak

U

ZC
Cromo lucido
Polished chrome

ZCS
Cromo satinato
Satin chrome

ZAN
Antracite
Anthracite

ZNE
Nero
Black

---

coordinato per finestra
window complement

U **SN22U**

eleonora

design:
Marco Pisati

made in italy

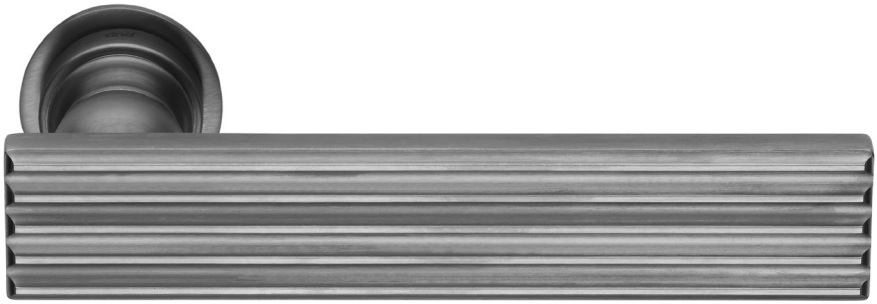

EL80
PGS | ***forte***®

Ottone
Brass

U

PVD-BG | *forte*®
Oro antico lucido
Antique bright gold

PVD-SG | *forte*®
Oro antico satinato
Antique satin gold

PVN | *forte*® new
Nickel lucido
Bright nickel

PGS | *forte*®
Grafite satinato
Satin graphite

OGH
Bronzo satinato opaco
Matt satin bronze

OC new
Cromo lucido
Polished chrome

OCS new
Cromo satinato
Satin chrome

---

coordinato per finestra
window complement

U **EL22U**

DUE

design:
Stefano Boeri Architetti

made in italy

DU80
PVD-SG | ***forte***®

PVD-SG | *forte*®
Oro antico satinato
Antique satin gold

PVD-SB | *forte*® new
Bronzo satinato
Satin bronze

PGS | *forte*®
Grafite satinato
Satin graphite

OCS
Cromo satinato
Satin chrome

ONO
Nero
Black

---

coordinato per finestra
window complement

U **DU22U**

levante

design:
Maurizio Varratta

made in italy

LE80
PVD-SCB | ***forte***®

Ottone
Brass

U

PVD-SG | *forte*®
Oro antico satinato
Antique satin gold

PVD-SCB | *forte*®
Rame satinato
Satin copper

PVX | *forte*®
Inox satinato
Satin steel

PGS | *forte*®
Grafite satinato
Satin graphite

OCS
Cromo satinato
Satin chrome

ONO **new**
Nero
Black

---

coordinato per finestra
window complement

U **LE22U**

drop

design:
Cino Zucchi

made in italy

DP80
PVX | ***forte***®

Ottone
Brass

U

PVD-SG | *forte*®
Oro antico satinato
Antique satin gold

PVD-SCB | *forte*®
Rame satinato
Satin copper

PVX | *forte*®
Inox satinato
Satin steel

PGS | *forte*®
Grafite satinato
Satin graphite

OCS
Cromo satinato
Satin chrome

---

coordinato per finestra
window complement

U **DP22U**

blend

design:
967arch

made in italy

BN80
OCS

Ottone
Brass

U

PVD-SG | *forte*®
Oro antico satinato
Antique satin gold

PVD-SB | *forte*® new
Bronzo satinato
Satin bronze

PGS | *forte*®
Grafite satinato
Satin graphite

OCS
Cromo satinato
Satin chrome

BNL
Bianco lucido
Bright white

ONO
Nero
Black

---

coordinato per finestra
window complement

U **BN22U**

viva!

design:
Luca Nichetto

made in italy

VV80
PVD-BG | ***forte***®

Ottone
Brass

U

PVD-BG | *forte*®
Oro antico lucido
Antique bright gold

PVD-SG | *forte*®
Oro antico satinato
Antique satin gold

PVD-SCB | *forte*®
Rame satinato
Satin copper

PVN | *forte*® new
Nickel lucido
Bright nickel

PGS | *forte*®
Grafite satinato
Satin graphite

OGH
Bronzo satinato opaco
Matt satin bronze

OC new
Cromo lucido
Polished chrome

OCS
Cromo satinato
Satin chrome

---

coordinato per finestra
window complement

U **VV22U**

zeppelin

design:
Jaime Hayon

made in italy

ZP80
PVN | ***forte***®

Ottone
Brass

U

PVD-BG | *forte*®
Oro antico lucido
Antique bright gold

PVD-SG | *forte*®
Oro antico satinato
Antique satin gold

PVD-SCB | *forte*®
Rame satinato
Satin copper

PVN | *forte*® new
Nickel lucido
Bright nickel

PGS | *forte*®
Grafite satinato
Satin graphite

OC new
Cromo lucido
Polished chrome

OCS new
Cromo satinato
Satin chrome

OVE
Verde
Green

ONO
Nero
Black

---

coordinato per finestra
window complement

U **ZP22U**

madeleine

design:
Inga Sempé

made in italy

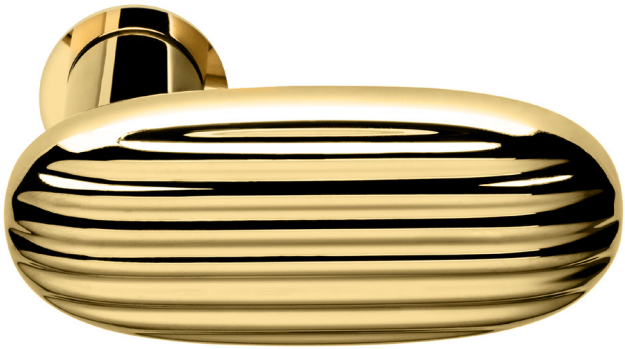

MA80
PVD-BG | ***forte***®

Ottone
Brass

U

PVD-BG | *forte*®
Oro antico lucido
Antique bright gold

PVD-SG | *forte*®
Oro antico satinato
Antique satin gold

PVD-SCB | *forte*®
Rame satinato
Satin copper

PVN | *forte*® new
Nickel lucido
Bright nickel

PGS | *forte*®
Grafite satinato
Satin graphite

ONO
Nero
Black

OC new
Cromo lucido
Polished chrome

OCS new
Cromo satinato
Satin chrome

---

coordinato per finestra
window complement

U **MA22U**

boole

design:
Odo Fioravanti

made in italy

BE80
OCS

Ottone
Brass

U

PVD-SG | *forte*®
Oro antico satinato
Antique satin gold

PVD-SB | *forte*® new
Bronzo satinato
Satin bronze

PVX | *forte*®
Inox satinato
Satin steel

PGS | *forte*®
Grafite satinato
Satin graphite

OCS
Cromo satinato
Satin chrome

ONO
Nero
Black

---

coordinato per finestra
window complement

U **BE22U**

iki

design:
Mario Scairato
Alessandro Stabile

made in italy

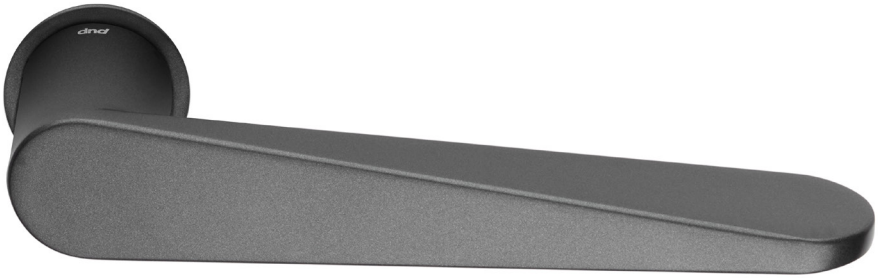

IK80
ZAN

Zama
Zamak

U

ZCS
Cromo satinato
Satin chrome

ZAN
Antracite
Anthracite

ZNE
Nero
Black

---

coordinato per finestra
window complement

U **IK22U**

ginkgo

design:
Giulio Iacchetti

made in italy

GK80
PVD-SG | ***forte***®

Good Design Awards 2017

Ottone
Brass

U

PVD-BG | *forte*®
Oro antico lucido
Antique bright gold

PVD-SG | *forte*®
Oro antico satinato
Antique satin gold

PVD-SH | *forte*® new
Oro champagne satinato
Champagne satin gold

PVD-BB | *forte*® new
Bronzo lucido
Bright bronze

PVD-SB | *forte*® new
Bronzo satinato
Satin bronze

PVN | *forte*® new
Nickel lucido
Bright nickel

PGS | *forte*®
Grafite satinato
Satin graphite

OC
Cromo lucido
Polished chrome

OCS
Cromo satinato
Satin chrome

ONO
Nero
Black

---

coordinato per finestra
window complement

U **GK22U**

ginkgo biloba

design:
Giulio Iacchetti

made in italy

GB80
PVD-BG | ***forte***®

Good Design Awards 2017

Ottone
Brass

U

PVD-BG | *forte*®
Oro antico lucido
Antique bright gold

PVD-SG | *forte*®
Oro antico satinato
Antique satin gold

PVD-SH | *forte*® new
Oro champagne satinato
Champagne satin gold

PVD-BB | *forte*® new
Bronzo lucido
Bright bronze

PVD-SB | *forte*® new
Bronzo satinato
Satin bronze

PVN | *forte*® new
Nickel lucido
Bright nickel

PGS | *forte*®
Grafite satinato
Satin graphite

OC
Cromo lucido
Polished chrome

OCS
Cromo satinato
Satin chrome

ONO
Nero
Black

---

coordinato per finestra
window complement

U **GB22U**

isabella

design:
Marco Pisati

made in italy

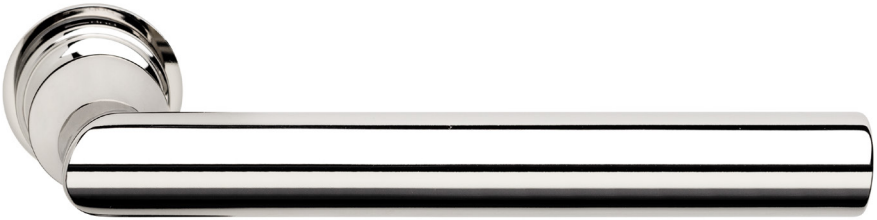

IS80
OC

Ottone
Brass

U

PVD-BG | *forte*®
Oro antico lucido
Antique bright gold

PVD-SG | *forte*®
Oro antico satinato
Antique satin gold

PVD-SH | *forte*® new
Oro champagne satinato
Champagne satin gold

PVD-BB | *forte*® new
Bronzo lucido
Bright bronze

PVD-SB | *forte*® new
Bronzo satinato
Satin bronze

PVN | *forte*® new
Nickel lucido
Bright nickel

PGS | *forte*®
Grafite satinato
Satin graphite

OGH
Bronzo satinato opaco
Matt satin bronze

OC
Cromo lucido
Polished chrome

OCS new
Cromo satinato
Satin chrome

---

coordinato per finestra
window complement

U **IS22U**

luxury

design:
Mauro Ronchi

made in italy

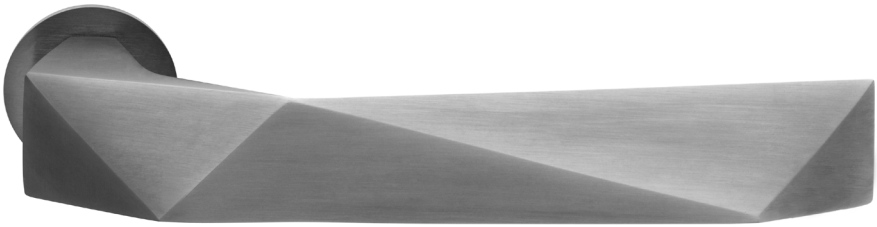

LU80
PGS | ***forte***®

Ottone
Brass

U

PVD-BG | *forte*®
Oro antico lucido
Antique bright gold

PVD-SG | *forte*®
Oro antico satinato
Antique satin gold

PVD-SCB | *forte*®
Rame satinato
Satin copper

PGS | *forte*®
Grafite satinato
Satin graphite

OGH
Bronzo satinato opaco
Matt satin bronze

OC
Cromo lucido
Polished chrome

OCS
Cromo satinato
Satin chrome

ONO
Nero
Black

---

coordinato per finestra
window complement

U **LU22U**

aretè

design:
Mauro Ronchi

made in italy

AT80
PGS | ***forte***®

Ottone
Brass

U

PVD-SG | *forte*®
Oro antico satinato
Antique satin gold

PVX | *forte*®
Inox satinato
Satin steel

PGS | *forte*®
Grafite satinato
Satin graphite

OGH
Bronzo satinato opaco
Matt satin bronze

AB
Bronzato
Antique bronze

OC
Cromo lucido
Polished chrome

OCS
Cromo satinato
Satin chrome

---

coordinato per finestra
window complement

U **AT22U**

aretè L

design:
Mauro Ronchi

made in italy

AL80
OGH

Ottone
Brass

U

PVD-SG | *forte*®
Oro antico satinato
Antique satin gold

PVX | *forte*®
Inox satinato
Satin steel

PGS | *forte*®
Grafite satinato
Satin graphite

OGH
Bronzo satinato opaco
Matt satin bronze

AB
Bronzato
Antique bronze

OC
Cromo lucido
Polished chrome

OCS
Cromo satinato
Satin chrome

---

coordinato per finestra
window complement

U **AL22U**

luce p

design:
Dnd technical division

made in italy

LP80
ZCS

Zama
Zamak

U

ZC
Cromo lucido
Polished chrome

ZCS
Cromo satinato
Satin chrome

ZNS
Nickel satinato
Satin nickel

ZOS
Ottonato satinato
Satin brass color

ZGH
Bronzo satinato opaco
Matt satin bronze

ZAN
Antracite
Anthracite

ZBN
Bianco
White

ZNE
Nero
Black

---

coordinato per finestra
window complement

U **LP22U**

luce

design:
Dnd technical division

made in italy

LC80
ZNE

Zama
Zamak

U

ZC
Cromo lucido
Polished chrome

ZCS
Cromo satinato
Satin chrome

ZNS
Nickel satinato
Satin nickel

ZOS
Ottonato satinato
Satin brass color

ZGH
Bronzo satinato opaco
Matt satin bronze

ZAN
Antracite
Anthracite

ZBN
Bianco
White

ZNE
Nero
Black

---

coordinato per finestra
window complement

U **LC30U**

short

design:
Karim Rashid

made in italy

SH80
OC

Ottone
Brass

U

PVD-BG | *forte*® new
Oro antico lucido
Antique bright gold

PVD-SG | *forte*®
Oro antico satinato
Antique satin gold

PVD-SCB | *forte*®
Rame satinato
Satin copper

PVD-BB | *forte*® new
Bronzo lucido
Bright bronze

PVD-SB | *forte*® new
Bronzo satinato
Satin bronze

PGS | *forte*®
Grafite satinato
Satin graphite

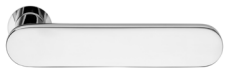

OC
Cromo lucido
Polished chrome

OCS
Cromo satinato
Satin chrome

AB
Bronzato
Antique bronze

OBN new
Bianco
White

ONO
Nero
Black

---

coordinato per finestra
window complement

U **SH22U**

chop

design:
Didier Schweizer

made in italy

CP80
ZNE

Zama
Zamak

U

ZC
Cromo lucido
Polished chrome

ZCS
Cromo satinato
Satin chrome

ZOS
Ottonato satinato
Satin brass color

ZGH
Bronzo satinato opaco
Matt satin bronze

ZAN
Antracite
Anthracite

ZNE
Nero
Black

---

coordinato per finestra
window complement

U **CP22U**

sochic

design:
Dnd technical division

made in italy

SC80
ZNE

Zama
Zamak

U

ZOR
Placcato oro 24K
Gold plated 24K

ZC
Cromo lucido
Polished chrome

ZNE
Nero
Black

---

coordinato per finestra
window complement

U **SC22U**

art

design:
Mauro Ronchi

made in italy

AR80
OC

Ottone
Brass

U

PVD | *forte*®
Oro lucido
Bright gold

PVD-BB | *forte*® new
Bronzo lucido
Bright bronze

PVD-SB | *forte*® new
Bronzo satinato
Satin bronze

OGH
Bronzo satinato opaco
Matt satin bronze

OC
Cromo lucido
Polished chrome

OCS
Cromo satinato
Satin chrome

ONS
Nickel satinato
Satin nickel

---

coordinato per finestra
window complement

U **AR22U**

linear

design:
Mauro Ronchi

made in italy

LI80
PVD-SG | ***forte***®

Ottone
Brass

U

PVD-BG | *forte*®
Oro antico lucido
Antique bright gold

PVD-SG | *forte*®
Oro antico satinato
Antique satin gold

OGH
Bronzo satinato opaco
Matt satin bronze

OC
Cromo lucido
Polished chrome

OCS
Cromo satinato
Satin chrome

---

coordinato per finestra
window complement

U **LI22U**

project

design:
Dnd technical division

made in italy

PR80
OS

Ottone
Brass

U

OLV
Lucido
Polished

OS
Satinato
Satin

AB
Bronzato
Antique bronze

OC
Cromo lucido
Polished chrome

OCS
Cromo satinato
Satin chrome

ONS
Nickel satinato
Satin nickel

ONO
Nero
Black

---

coordinato per finestra
window complement

U **PR22U**

U

Istruzioni montaggio Unico per porta
Installation instructions Unico for door

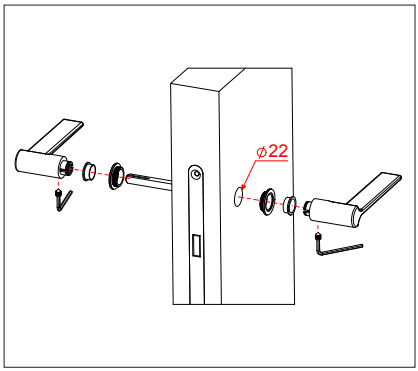

Solo maniglia
Handle only

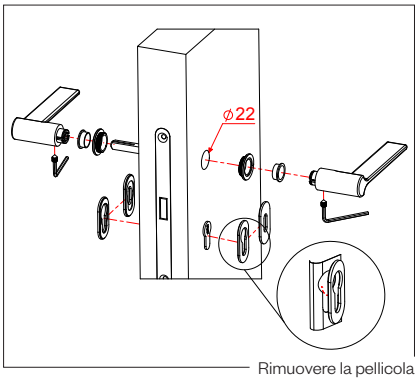

Rimuovere la pellicola protettiva dal biadesivo
Remove the protective film from the adhesive tape

Con bocchette
With escutcheons

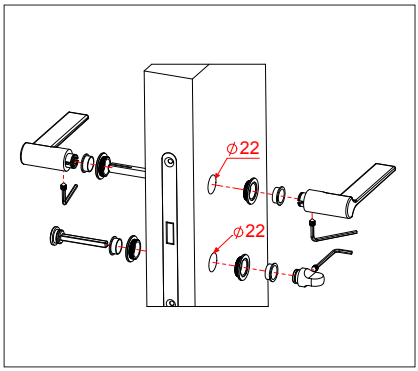

Con nottolino
With turn & release

ATTENZIONE!
Per una migliore tenuta il foro nella porta deve essere il più preciso possibile rispetto alla quota indicata e deve essere centrato con il meccanismo della serratura.

CAUTION!
For a better fitting, the hole in the hardware must be as precise as possible in relation to the indicated dimension and must be centered with the lock mechanism.

U

Istruzioni montaggio DK Unico per finestra
Installation instructions DK Unico for window

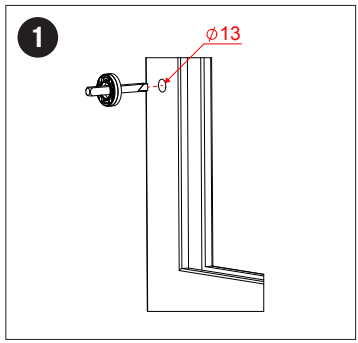

Inserire il meccanismo
Insert the mechanism

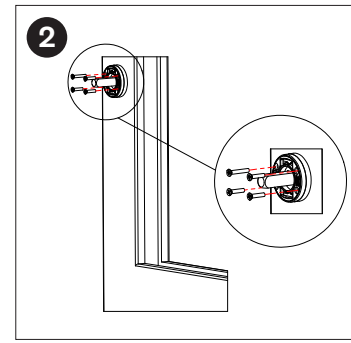

Fissarlo con le 4 viti
Fix the mechanism with 4 screws

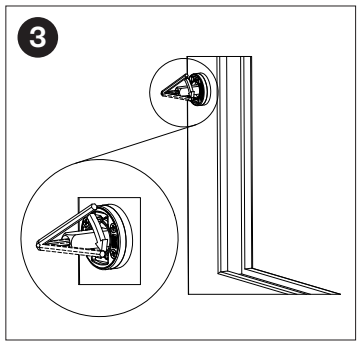

Serrare la vite a brugola
Tighten the Allen screw

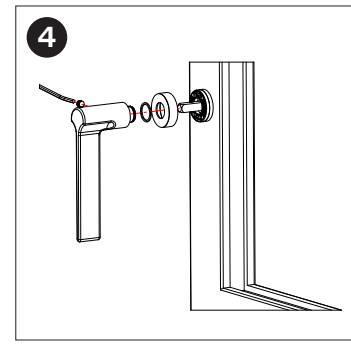

Inserire la rosetta, posizionare la maniglia e bloccarla con il grano
Insert the rose, place the handle and i lock it in position with the grub screw

ATTENZIONE!
Per una migliore tenuta il foro nel serramento deve essere il più preciso possibile rispetto alla quota indicata e deve essere centrato con il meccanismo della serratura.

CAUTION!
For a better fitting, the hole in the hardware must be as precise as possible in relation to the indicated dimension and must be centered with the lock mechanism.

Copertina /
Cover
Leonardo Sonnoli
Irene Bacchi
– Studio Sonnoli –

Fotografie
delle maniglie /
Door handles
photographs
Tiziano Reguzzi

Dnd Martinelli S.r.l.
Via Piani di Mura, 2
25070 Casto (BS) – Italia

T +39 0365 899113
info@dndhandles.it

www.dndhandles.it

© 2025 Dnd Martinelli S.r.l.

Tutti i diritti riservati
All rights reserved

handles
with care

dndhandles.it

Dnd Martinelli S.r.l.
Via Piani di Mura, 2
25070 Casto (BS) – Italia

T +39 0365 899113
info@dndhandles.it

www.dndhandles.it