BRENNAN Industries

The Logical Choice for Hydraulic Fittings and Adapters®

PRODUCT CATALOG

O-Ring Face Seal Fittings

Tube Fittings & Adapters

Flange Adapters

Flareless Bite Type Fittings

DIN Fittings

International Fittings

NWD

$15°°

In 1953, Brennan Industries, Inc. was founded in Ohio to answer the need of hydraulic systems customers who required reliable tube fitting and adapter products in a timely fashion.

In the early years, only about 300 different connectors were being manufactured. Today, with over 20, 000 line items in inventory, Brennan offers the most complete line of hydraulic tube fittings, adapters and related products available anywhere in the world.

Whether you need steel, stainless steel or brass standards or specials, we have the fittings you need on the shelf and in sizes ranging from 1/16” to 2” and higher.

In addition to our 6 well stocked, full service domestic USA distribution centers, Brennan is now a recognized quality global manufacturer of hydraulic fittings and adapters with international distribution centers opening in the near future.

Our global manufacturing and inspection processes assure that our customers, no matter where they may be located, will receive quality Brennan fittings consistent in fit, form, function, quality and performance.

As an ISO 9001: 2000 certified company, all our products meet or exceed J.I.C./S.A.E. specifications and Brennan is the product identification and traceability innovator within the industry.

Brennan’s international reputation for excellence has contributed to our rapid growth. Despite this growth we remain a family owned business making sure our customers still receive personal attention by our experienced sales and customer service representatives.

If you prefer doing business electronically, in addition to Brennan’s e-commerce solutions, you can check us out on the web: www.brennaninc.com.

We look forward to hearing from you.

TABLE OF CONTENTS

Reference ---------- A

Technical Specification ---------- A-001

Parts Nomenclature ---------- A-005

Glossary of Description ---------- A-005

O-Ring Face Seal Fittings ---------- B

Tube Fittings & Adapters ---------- C

Hydraulic Flanges & Accessories ---------- D

Flareless Bite Type Fittings ---------- E

Metric Bite Type Fittings ---------- F

International Fittings ---------- G

NWD Technology Fittings ---------- H

Interchange Chart,Numerical Index and Terms of Sale ---------- I

A-001

Suggested OEM Torque and Pressure Ratings

SAE J514 and J1453 Steel Fittings

Dash Size	Type	Wet Torque [ft-lb]	Variance	Flats Method for JIC Only	SAE Working Pressure 4:1
4	MAORB Jam Nut	23	+2-2	N/A	4,500
4	MORB Straight Thread Port Connections	15	+2-2	N/A	5,000
4	O-Ring Face Seal Treads	13	+2-2	N/A	6,000
4	JIC 37° Flare and Swivel Nuts	13	+2-2	11/2-1 3/4	5,000/4,500
6	MAORB Jam Nut	32	+2-2	N/A	4,000
6	MORB Straight Thread Port Connections	24	+2-2	N/A	5,000
6	O-Ring Face Seal Treads	23	+2-2	N/A	6,000
6	JIC 37° Flare and Swivel Nuts	23	+2-2	1-11/2	5,000/4,000
8	MAORB Jam Nut	55	+3-3	N/A	4,000
8	MORB Straight Thread Port Connections	40	+3-3	N/A	4,500
8	O-Ring Face Seal Treads	40	+3-3	N/A	6,000
8	JIC 37° Flare and Swivel Nuts	40	+3-3	11/2-1 3/4	4,500/4,000
10	MAORB Jam	75	+5-3	N/A	3,000
10	MORB Straight Thread Port Connections	60	+5-3	N/A	3,500
10	O-Ring Face Seal Treads	60	+5-3	N/A	6,000
10	JIC 37° Flare and Swivel Nuts	60	+5-3	1-11/2	3,500/3000
12	MAORB Jam Nut	115	+5-3	N/A	3,000
12	MORB Straight Thread Port Connections	100	+5-3	N/A	3,500
12	O-Ring Face Seal Treads	85	+5-3	N/A	6,000
12	JIC 37° Flare and Swivel Nuts	85	+5-3	1-11/2	3,500/3,000
16	MAORB Jam Nut	115	+8-0	N/A	2,500
16	MORB Straight Thread Port Connections	115	+8-0	N/A	3,000
16	O-Ring Face Seal Treads	115	+8-0	N/A	6,000
16	JIC 37° Flare and Swivel Nuts	115	+8-0	3/4-1	3,000/2,500
20	MAORB Jam Nut	115	+20-0	N/A	2,000
20	MORB Straight Thread Port Connections	115	+20-0	N/A	2,500
20	O-Ring Face Seal Treads	115	+20-0	N/A	4,000
20	JIC 37° Flare and Swivel Nuts	115	+20-0	3/4-1	2,500/2,000
24	MAORB Jam Nut	115	+50-0	N/A	1,500
24	MORB Straight Thread Port Connections	115	+50-0	N/A	2,000
24	O-Ring Face Seal Treads	115	+50-0	N/A	4,000
24	JIC 37° Flare and Swivel Nuts	115	+50-0	3/4-1	2,000/1,500
32	MAORB Jam Nut	115	+85-0	N/A	1,125
32	MORB Straight Thread Port Connections	115	+85-0	N/A	1,500
32	O-Ring Face Seal Treads	115	+85-0	N/A	-
32	JIC 37° Flare and Swivel Nuts	115	+85-0	3/4-1	1,500/1,125

Suggested OEM Torque and Pressure Ratings continued

A-002

BSP Steel Fittings

Dash Size	Type	Wet Torque [Nm]	Working Pressure BAR	Wet Torque [lb-ft]	Working Pressure PSI
2	BSPP 60° Inner Tapper Connection	12-14	350	9-11	5,000
2	BSPP MAORB Jam Nut Port Connection	20	250	15	3,600
4	BSPP 60° Inner Tapper Connection	14-16	350	10-12	5,000
4	BSPP MAORB Jam Nut Port Connection	35	250	26	3,600
6	BSPP 60° Inner Tapper Connection	25-28	200	19-20	2,900
6	BSPP MAORB Jam Nut Port Connection	70	250	52	3,600
8	BSPP 60° Inner Tapper Connection	45-60	200	33-44	2,900
8	BSPP MAORB Jam Nut Port Connection	100	250	74	3,600
10	BSPP 60° Inner Tapper Connection	55-70	200	41-52	2,900
10	BSPP MAORB Jam Nut Port Connection	100	250	74	3,600
12	BSPP 60° Inner Tapper Connection	90-110	200	66-81	2,900
12	BSPP MAORB Jam Nut Port Connection	190	250	140	3,600
16	BSPP 60° Inner Tapper Connection	120-140	115	89-103	1,700
16	BSPP MAORB Jam Nut Port Connection	300	250	220	3,600
20	BSPP 60° Inner Tapper Connection	170-190	100	125-140	1,500
20	BSPP MAORB Jam Nut Port Connection	330	200	243	3,000
24	BSPP 60° Inner Tapper Connection	200 - 245	100	148-181	1,500
24	BSPP MAORB Jam Nut Port Connection	400	140	295	2,000

Metric (L) Light

Dash Size	Type	Wet Torque (Nm)	Working Pressure BAR	Wet Torque [lb-ft]	Working Pressure PSI
12x1.5	Inner Tapper Connection	13-15	250	10-11	3,600
14x1.5	Inner Tapper Connection	15-18	250	11-13	3,600
16x1.5	Inner Tapper Connection	25-28	250	19-20	3,600
18x1.5	Inner Tapper Connection	27-30	250	19-22	3,600
22x1.5	Inner Tapper Connection	50-60	250	36-44	3,600
26x1.5	Inner Tapper Connection	60-75	160	44-55	2,300
30x2	Inner Tapper Connection	85-105	160	62-77	2,300
36x2 24°	Inner Tapper Connection	120-140	100	89-103	1,400
45x2 24°	Inner Tapper Connection	170-190	100	125-140	1,400
52x2 24°	Inner Tapper Connection	190-230	100	140-170	1,400

Metric (S) Heavy

Oash Size	Type	Wet Torque [Nm]	Working Pressure BAR	Wet Torque [lb-ft]	Working Pressure PSI
14x1.5 24°	Inner Tapper Connection	14-16	630	10-12	9,000
16x1.5 24°	Inner Tapper Connection	25-28	630	19-20	9,000
18x1.5 24°	Inner Tapper Connection	27-30	630	19-22	9,000
20x1.5 24°	Inner Tapper Connection	43-54	630	32-40	9,000
22x1.5 24°	Inner Tapper Connection	50-62	630	36-46	9,000
24x1.5 24°	Inner Tapper Connection	60-75	400	44-55	5,800
30x2 24°	Inner Tapper Connection	90-110	400	66-81	5,800
36x2 24°	Inner Tapper Connection	125-145	400	91-107	5,800
42x2 24°	Inner Tapper Connection	170-190	250	125-140	3,600
52x2 24°	Inner Tapper Connection	200 - 245	250	148-181	3,600

Suggested OEM Torque and Pressure Ratings continued

ISO 6149

Dash Size	Type	Wet Torque [ft-lb]	Variance	Flats Method for JIC Only	SAE Working Pressure 4:1
10x1	ISO 6149 Jam Nut Port Connection	20	415	15	6,000
12x1.5	ISO 6149 Jam Nut Port Connection	35	415	26	6,000
14x1.5	ISO 6149 Jam Nut Port Connection	45	415	33	6,000
16x1.5	ISO 6149 Jam Nut Port Connection	55	415	41	6,000
18x1.5	ISO 6149 Jam Nut Port Connection	68	415	50	6,000
20x1.5	ISO 6149 Jam Nut Port Connection	80	415	60	6,000
22x1.5	ISO 6149 Jam Nut Port Connection	98	415	72	6,000
26x1.5	ISO 6149 Jam Nut Port Connection	170	415	125	6,000
27x2	ISO 6149 Jam Nut Port Connection	180	415	133	6,000
33x2	ISO 6149 Jam Nut Port Connection	310	350	228	5,000

Dash Size	Brass Fittings	Wet Torque [lb-ft]	Flats Method For JIC Only	Working Pressure PSI
6	JIC 37° Flare	13	3/4-1-1/4	1,200
8	JIC 37° Flare	23	3/4-1-1/4	1,200
12	JIC 37° Flare	60	3/4-1	1,200

SAE J514 Working Pressure Ratings
Capable of 4 to 1 Minimum Burst

Note: In the case of a fitting that is a jump size, it is recommend that the lower pressure of the two ends must be recognized as the working pressure rating for that fitting. This is also the case if the fitting has one or more different style ends. For example, straight threads to pipe threads. In this case it is also recommended that the lower pressure rating of the two different style ends must be recognized as the working pressure rating for that fitting.

Norn SAE Dash Size	Nom Tube O.D. M.M.	Nom Tube O.D. Inch	Straight Thread Size	Nom Pipe Size	Rigid SAE St. Thread Unions & Bulkhead MPa	Rigid SAE St. Thread Unions & Bulkhead PSI	Adjustable SAEStd. Thread & Female Swivel MPa	Adjustable SAE Std. Thread & Female Swivel PSI	Fittings with Pipe Thread MPa	Fittings with Pipe Thread PSI	NPSM Std. Pipe Thread Maximum Operating Pressure MPa	NPSM Std. Pipe Thread Maximum Operating Pressure PSI
2	3.18	0.125	5/16-24	1/8	34.5	5.000	34.5	5.000	34.5	5.000	34.5	5,000
3	4.76	0.188	3/8-24	1/8	34.5	5.000	34.5	5.000	34.5	5.000		
4	6.35	0.250	7/16-20	1/8	34.5	5,000	31.0	4,500	34.5	5,000	34.5	5,000
5	7.94	0.313	1/2-20	1/8	34.5	5,000	27.5	4,000	34.5	5,000	–	–
6	9.52	0.375	9/16-18	1/4	34.5	5,000	27.5	4,000	27.5	4,000	27.5	4,000
8	12.70	0.500	3/4-16	3/8	31.0	4,500	27.5	4,000	21.0	3,000	24.1	3,500
10	15.88	0.625	7/8-14	1/2	24.0	3,500	21.0	3,000	21.0	3,000	–	—
12	19.05	0.750	1 1/16-12	3/4	24.0	3,500	21.0	3,000	17.0	2,500	15.5	2,250
14	22.22	0.875	13/16-12	3/4	21.0	3,000	17.0	2,500	17.0	2,500	–	—
16	25.40	1.000	1 5/16-12	1	21.0	3,000	17.0	2,500	14.0	2,000	13.8	2,000
20	31.75	1.250	1 5/8-12	1 1/4	17.0	2,500	14.0	2,000	8.0	1,150	11.2	1,625
24	38.10	1.500	1 7/8-12	1 1/2	14.0	2,000	10.5	1,500	7.0	1,000	8.6	1,250
32	50.30	2.000	21/2-12	2	10.5	1,500	8.0	1,125	7.0	1,000	7.8	1,125

MPa (Mega Paskels) - 1 MPa = 145 PSI

Technical Specification

A-004

SAE J1453 Working, Proof & Minimum Pressures for Face Seal Fittings

Note: In the case of a fitting that is a jump size, it is recommend that the lower pressure of the two ends must be recognized as the working pressure rating for that fitting. This is also the case if the fitting has one or more different style ends. For example, Face Seal to pipe threads. In this case it is also recommended that the lower pressure rating of the two different style ends must be recognized as the working pressure rating for that fitting.

Nom SAE Dash Size	Straight Fittings Working MPa	Straight Fittings Working PSI	Straight Fittings Proof MPa	Straight Fittings Proof PSI	Straight Fittings Min. Burst MPa	Straight Fittings Min. Burst PSI	Adjustable Fittings Working MPa	Adjustable Fittings Working PSI	Adjustable Fittings Proof MPa	Adjustable Fittings Proof PSI	Adjustable Fittings Min. Burst MPa	Adjustable Fittings Min. Burst PSI
4	41.3	6,000	82.5	12,000	165	24,000	41.3	6,000	82.5	12,000	165.0	24,000
6	41.3	6,000	82.5	12,000	165	24,000	41.3	6,000	82.5	12,000	165.0	24,000
8	41.3	6,000	82.5	12,000	165	24,000	41.3	6,000	82.5	12,000	165.0	24,000
10	41.3	6,000	82.5	12,000	165	24,000	41.3	6,000	82.5	12,000	165.0	24,000
12	41.3	6,000	82.5	12,000	165	24,000	41.3	6,000	82.5	12,000	165.0	24,000
16	41.3	6,000	82.5	12,000	165	24,000	34.5	5,0000	69.9	10,000	138.0	20,000
20	27.5	4,000	55.0	8,000	110	16,000	27.5	4,000	55.0	8,000	110.0	16,000
24	27.5	4,000	55.0	8,000	110	16,000	20.7	3,000	41.3	6,000	82.5	12,000

MPa (Mega Paskels) - 1 MPa = 145 PSI

SAE J518 Maximum Working Pressure Ratings for Code 61 Flange Fittings

Nominal Flange Size Inch	Maximum Recommended Working Pressure MPa	Maximum Recommended Working Pressure PSI
1/2	34.5	5,000
3/4	34.5	5,000
1	34.5	5,000
1 1/4	27.6	4,000
1 1/2	20.7	3,000
2	20.7	3,000

MPa (Mega Paskels) - 1 MPa = 145 PSI

SAE J518 Maximum Working Pressure Ratings for Code 62 Flange Fittings

Nominal Flange Size Inch	Maximum Recommended Working Pressure MPa	Maximum Recommended Working Pressure PSI
1/2	41.4	6,000
3/4	41.4	6,000
1	41.4	6,000
1 1/4	41.4	6,000
1 1/2	41.4	6,000
2	41.4	6,000

MPa (Mega Paskels) - 1 MPa = 145 PSI

Parts Nomenclature

Brennan Industries, Inc.'s hydraulic tube fitting and adapter part numbers are constructed from symbols that identify the series, size, material and type of product. When ordering part numbers, begin by listing the series followed by the size and the material suffix. Sizes are measured in sixteenths of an inch (example: 4/16 or 4). The standard product is produced in steel and requires no material suffix. If ordering stainless steel products, add the suffix SS, and if you are ordering brass products, add the suffix B. Add the suffix D for Aluminum products. Standard steel shapes such as 90°, 45°, tees and crosses are produced as a forging as well as fitting components brazed together. If you require forged one-piece construction parts, order the part number with the F6 suffix. All stainless steel and brass,Aluminum shapes are forged one-piece construction and therefore do not require the FG suffix. Metric Bite Type Fittings are called out by tube size (in millimeters) i.e. 20mm Tube (S20), while Metric Port Fittings are called out by Thread O.D. and Thread Pitch (in millimeters) i.e. 30x2.0 or 30x1.5. BSPP fittings, while different from U.S. threads are still measured fractionally and are therefore called out by sixteenths of an inch.

2501-08-08-SS

This is a 2501 Series with a 1/2" male JIC tube and a 1/2" male pipe thread. The part number also indicates that the product is made of stainless steel.

2501-12-08-FG

This is a 2501 Series with a 3/4" male JIC tubeand a 1/2" male pipe thread. The part numberalso indicates that the product was produced as a forged one-piece construction, steel adapter.

2501-04-04-B

This is a 2501 Series witha 1/4" male JIC tubeand a 1/4" male pipe thread. The part number also indicates that the product is made of brass.

2501-08-0G-D

This is a 2501 Series with a 1/2" male JIC tube and a 3/8" male pipe thread. The part number also indicates that the product is made of Aluminum.

Glossary of Descriptions

A0RB: Adjustable 0-ring Boss (NWO)
B: Brass
BHLN: Bulk Head Lock Nut
BSPP: British Standard Pipe Parallel (G Thread)
BSPPS: British Standard Pipe Parallel Swivel
BSPT: British Standard Pipe Taper (R Thread)
BT: Bite Type
BT: Bored Through Connector in Double Ferrule Series
BTS: Bite Type Swivel
BULN: Back-up Lock Nut (NWO)
BW: Butt Weld
C: (before number) Bite Type
C: (after number) Cap
COR: Captive 0-Ring (Style DIN 3852, Form E)
C HEX: Width Across the Wrench
D: Aluminum
DK0: 24° Sealing Cone (Female Swivel) with 0-Ring
E: Extra Light (Metric Fittings)
F: (before number) Flare-0
FBSPP: Female British Standard Pipe Parallel
FBSPT: Female British Standard Pipe Tapered
FBSPPS: Female British Standard Pipe Parallel Swivel
FFS: Female Face Seal
FFSS: Female Face Seal Swivel
FG: Forged Flats of the Hex
FIF: Female Inverted Flare
FJ: Female J.I.C.
FJIS: Female J.I.S.
FJS: Female J.I.C. Swivel
FK: Female Komatsu
FMS: Female Metric Swivel
FO: Flare-0
FORB: Female 0-ring Boss
FP: Female Pipe
FPS: Female Pipe Swivel
FS: Face Seal
FSAES: Female SAE Swivel, 45° Seat
H: Hollow Hex O-ring Plug
HB: Hose Barb
HP: Hollow Hex Pipe Plug
I.D.: Inside Dimension
JIC: Joint Industrial Council, 37° Flare
JIS: Japanese Industrial Standard, 30° Flare
L Light (7005-04-L06-12)
L: Long (6400-L-20-20-0)
LGTH: Length
LH: Large Hex
LL: Extra Long Drop
LLL: Extra Extra Long
LLLL Extra Extra Extra Long
MAORB: Male Adjustable 0-ring Boss (NWO)
MBT: Metric Bite Type
MBSPP: Male British Standard Pipe Parallel
MBSPPADJ: Male British Standard Pipe Parallel Adjustable
MBSPPAORB: Male British Standard Pipe Parallel Adjustable 0-ring Boss
MBSPT: Male British Standard Pipe Tapered
MFS: Male Face Seal
MIFS: Male Inverted Flare Swivel
MJ: Male J.I.C.
MJIS: Male J.I.S.
MKOM: Male Komatsu
M.M.: Millimeters
MM: Male Metric
MMADJ: Male Metric Adjustable
MMAORB: Male Metric Adjustable O-ring Boss use with ISO 6149
MMORR: Male Metric 0-Ring and Retaining Ring
MORB: Male 0-ring Boss
MP: Male Pipe
MS: Metric Swivel
N: Used as prefix for Instrumentation fittings series (N2404-04-04-SS)
N: Extended Length (5404-N-02x0.750)
N: Locknut for NWO Assembly (0306-N-03)
NBR: Assembled with Nut and Bite Ring
NPSM: American (formerly National) Pipe Straight Mechanical
NPTF: American (formerly National) Pipe Taper Fuel
NWO: Nut Washer 0-ring (MAORB)
0:0-Ring
O.D.: Outside Dimension
ORB: 0-Ring Boss
PC DOT: SAE DOT Push to Connect Fittings for Vehicle Applications
PCNY: Push to Connect Nylon Fittings
PCNB: Push to Connect Nickel-Plated Brass Fittings
PL: Push Lock
PLATE MAX: Recommended Maximum Plate Thickness After Assembling the Bulkhead with the 306 Locknut, 318 Nut & 319 Sleeve
P: Plug
S: Heavy (7005-04-S06-14)
S: Steel
SAE: Society of Automotive Engineering
SHP: Square Head Plug
SS: Stainless Steel
TS: Tube Spud
V: Versa Flare
Y FLATS: Width Across the Wrench Flats

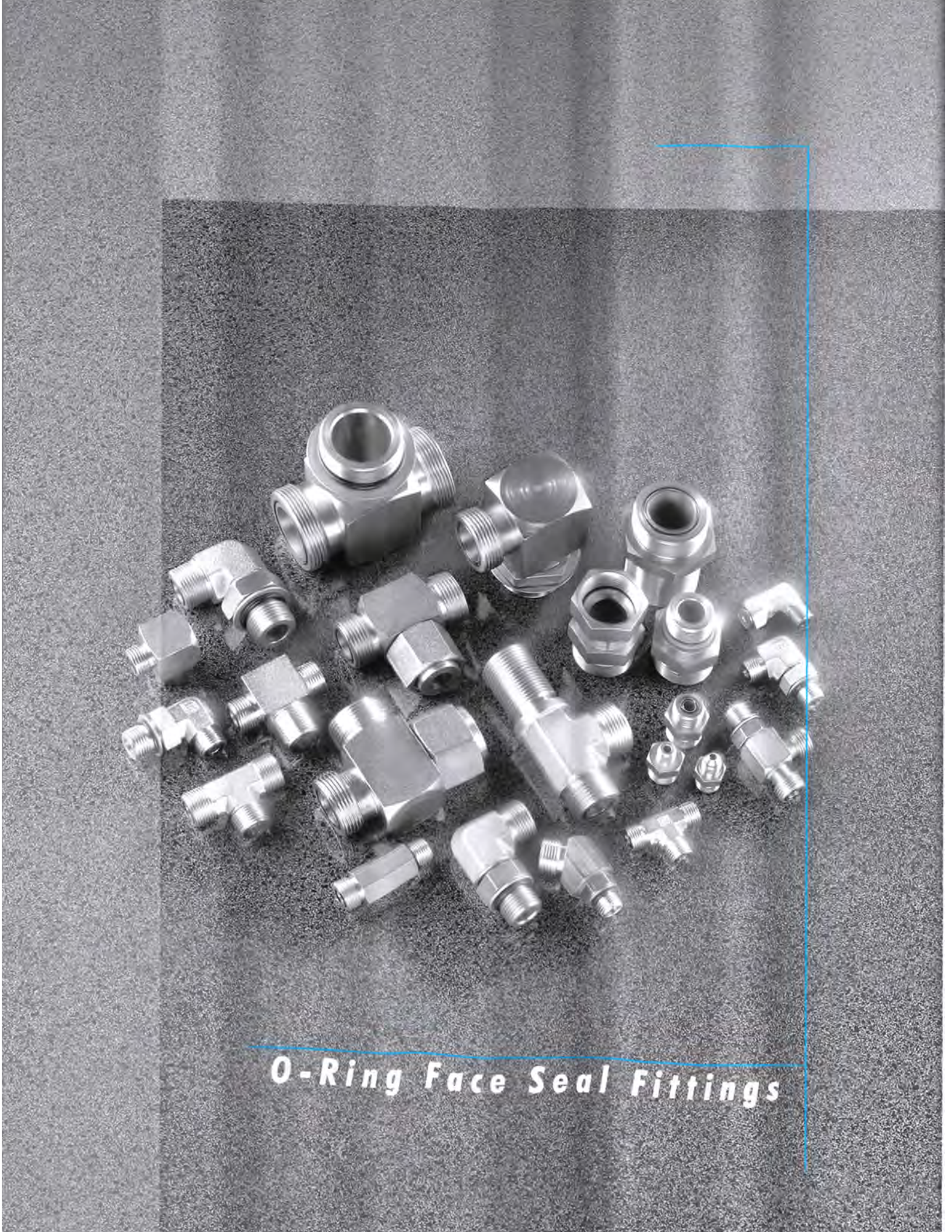

O-Ring Face Seal Fittings

O-Ring Face Seal Fittings

Brennan Industries,Inc.'s steel and stainless steel o-ring face seal fittings meet all design and performance requirements for o-ring face seal fittings in Standard J1453 published by the Society of Automotive Engineers (SAE).

(520112) B-003 **FS0304-C** Cap Assembly Insert	(520118) B-003 **FS0306** Bulkhead Lock Nut	(520110) B-004 **FS0318** Nut	(520115) B-004 **FS0319** Sleeve	(520104) B-005 **FS0403** Bore-MFS Straight	B-005 **FS0403-TS** MFS Tube Spud
B-006 **FS0406** Bore-MFS Bulkhead Straight	(520101) B-006 **FS2403** MFS-MFS Straight	B-007 **FS2404** MFS-MP Straight	B-007 **FS2405** FS-FP Straight	(520123) B-008 **FS2406** FFS-MFS Tube End Reducar	(520109) B-008 **FS2408** MFS Plug
(520201) B-009 **FS2500** MFS-MFS 90°	B-009 **FS2501** MFS-MP 90°	B-010 **FS2503** MFS-MP-45°	B-010 **FS2601** MFS-MFS-MP Tee	(520401) B-011 **FS2603** MFS-MFS-MFS Tee	B-011 **FS2605** MFS-MP-MFS Tee
(520501) B-011 **FS2650** MFS-MFS-MFS-MFS Cross	(520601) B-012 **FS2700** MFS-MFS Bulkhead Union	(520701) B-012 **FS2701** MFS-MFS Bulkhead 90°	(520801) B-013 **FS2702** MFS-MFS Bulkhead 45°	B-013 **FS2703** MFS-MFS-Bulkhead Tee	(520201) B-014 **FS2704** MFS-MFS-MFS Bulkhead Run Tee
B-014 **FS2764** MFS Bulkhead-MORB Straight	(J515 TYPE CH) B-014 **FS4000** Buna O-ring	B-015 **FS4001** Viton O-ring	B-015 **FS6001** Silver Braze Ring	(520120) B-016 **FS6400-0** MFS-MORB Straight	(520122) B-017 **FS6400-L-0** MFS-MORB Straight Long
B-017 **FS6402** MFS-FJS Straight	B-017 **FS6403** MFS-MJ Straight	B-018 **FS6410** FORB-MFS Straight	(520221) B-018 **FS6500** MFS-FFSS 90°	B-018 **FS6502** MFS-FFSS 45°	B-019 **FS6503** FP-FFSS 90°

O-Ring Face Seal Fittings

B-019 **FS6504** FFSS-MJ Straight	B-019 **FS6505** MP-FFSS Straight	B-020 **FS6540** FFSS-MORB Straight	B-020 **FS6564** MFS-FFSS-FORB Straight	B-020 **FS6565** FFSS-FFSS Seraight	(520433) B-021 **FS6600** MFS-MFS-FFSS Branch Tee
(520432) B-021 **FS6602** MFS-FFSS-MFS Run Tee	(520220) B-022 **FS6801-NWO** MFS-MAORB 90°	B-022 **FS6801-L-NWO** MFS-MAORB 90° Long	B-023 **FS6801-LL-NWO** MFS-MAORB 90° X-Long	(520320) B-023 **FS6802-NWO** MFS-MAORB 45°	(520429) B-023 **FS6803** MFS-MFS-MAORB Tee
B-024 **FS6803-L-NWO** MFS-MFS-MAORB Tee	(520428) B-024 **FS6804** MFS-MAORB-MFS Tee	(520281) B-024 **FS6809-NWO** FFSS-MAORB 90°	B-025 **FS6845-NWO** MFS-MAORB-FP Tee	B-025 **FS6850-NWO** MFS–MFS-MAORB -MFS Cross	B-025 **FS6859-NWO** MFS-MAORB–MFS -MFS Cross
B-025 **FS7002** MFS-MBSPP Straight	B-026 **FS7005** MFS-MM Straight	B-026 **FS7202-NWO** MFS-MBSPP 90° Elbow	B-027 **FS7205-NWO** MFS-MMAORB 90° Elbow	B-027 **FS7210** MFS-MFS-MMAORB Tee	B-028 **FS7215** MFS-MMAORB-MFS Tee
B-028 **FS7300-NWO** MFS-MMAORB 45° Elbow	B-029 **FS7640-0** MFS-MMORB ISO6149-2 Straight	B-029 **FS7701** MFS-Metric Parallel Elastomer Seal			

Cap Assembly Insert

FS0304-C Series

Used with FS0318

SAE# 520112

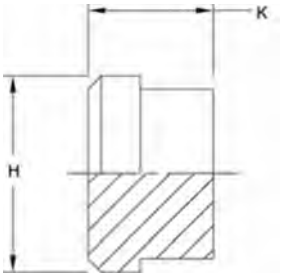

PART NO.SIZE	TUBE D.D.	H O.D.	K LGTH
FS0304-C-04	1/4	0.502	0.34
FS0304-C-06	3/8	0.620	0.37
FS0304-C-08	1/2	0.745	0.47
FS0304-C-10	5/8	0.923	0.47
FS0304-C-12	3/4	1.097	0.53
FS0304-C-16	1	1.347	0.59
FS0304-C-20	1 -1/4	1.597	0.59
FS0304-C-24	1-1/2	1.910	0.59

Bulkhead Lock Nut

FS0306 Series

SAE# 520118

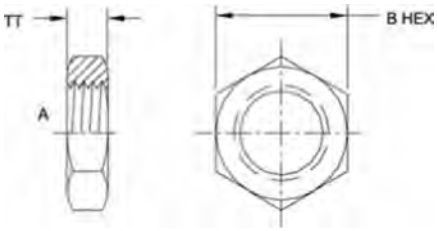

PART NO.SIZE	TUBE 0.0.	A THREAD	B HEX	TT WIDTH
FS0306-04	1/4	9/16-18	0.812	0.27
FS0306-06	3/8	11/16-16	1.000	0.31
FS0306-08	1/2	13/16-16	1.125	0.35
FS0306-10	5/8	1-14	1.312	0.41
FS0306-12	3/4	1-3/16-12	1.500	0.41
FS0306-16	1	1-7/16-12	1.750	0.41
FS0306-20	1-1/4	1 11/16-12	2.000	0.41
FS0306-24	1-1/2	2-12	2.375	0.41

Technical Specification

Nut
FS0318 Series

SAE# 520110

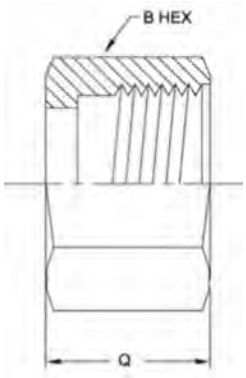

B-004

PART NO.SIZE	TUBE O.D.	A THREAD	8 HEX	Q WIDTH
FS0318-04	1/4	9/16-18	0.687	0.580
FS0318-06	3/8	11/16-16	0.812	0.670
FS0318-08	1/2	13/16-16	0.938	0.827
FS0318-10	5/8	1-14	1.125	0.925
FS0318-12	3/4	1-3/16-12	1.375	1.024
FS0318-16	1	1-7/16-12	1.625	1.095
FS0318-20	1-1/4	1-11/16-12	1.875	1.095
FS0318-24	1-1/2	2-12	2.250	1.095

Sleeve
FS0319 Series

SAE# 520115

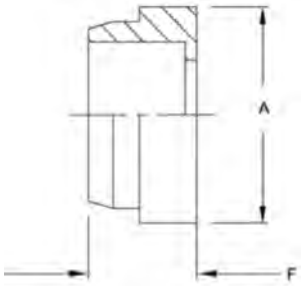

PART NO.SIZE	TUBE O.D.	A O.D.	F LGTH
FS0319-04	1/4	0.502	0.374
FS0319-06	3/8	0.620	0.374
FS0319-08	1/2	0.745	0.374
FS0319-10	5/8	0.923	0.413
FS0319-12	3/4	1.097	0.551
FS0319-16	1	1.347	0.610
FS0319-20	1-1/4	1.597	0.610
FS0319-24	1-1/2	1.910	0.610

Note:Braze style

Bore-MFS Straight
FS0403 Series

SAE# 520104

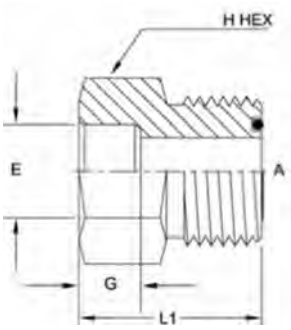

PART NO.SIZE	E* BORE	A THREAD	A DRILL	G* DEPTH	LI LGTH	H HEX
FS0403-04-04	0.256	9/16-18	0.172	0.330	0.86	0.625
FS0403-04-06	0.256	11/16-16	0.264	0.330	0.90	0.750
FS0403-06-04	0.381	9/16-18	0.172	0.330	0.86	0.750
FS0403-06-06	0.381	11/16-16	0.264	0.330	0.90	0.750
FS0403-06-08	0.381	13/16-16	0.378	0.330	0.97	0.875
FS0403-08-06	0.506	11/16-16	0.264	0.330	0.90	0.875
FS0403-08-08	0.506	13/16-16	0.378	0.330	0.97	0.875
FS0403-08-10	0.506	1-14	0.484	0.330	1.07	1.062
FS0403-08-12	0.506	1-3/16-12	0.609	0.330	1.16	1.250
FS0403-10-08	0.631	13/16-16	0.378	0.330	0.97	1.062
FS0403-10-10	0.631	1-14	0.484	0.330	1.07	1.062
FS0403-10-12	0.631	1-3/16-12	0.609	0.330	1.16	1.250
FS0403-12-08	0.757	13/16-16	0.378	0.490	1.13	1.250
FS0403-12-10	0.757	1-14	0.484	0.490	1.23	1.250
FS0403-12-12	0.757	1-3/16-12	0.609	0.490	1.32	1.250
FS0403-12-16	0.757	1-7/16-12	0.811	0.490	1.46	1.500
FS0403-16-12	1.007	1-3/16-12	0.609	0.550	1.38	1.500
FS0403-16-16	1.007	1-7/16-12	0.811	0.550	1.52	1.500
FS0403-16-20	1.007	1-11/16-12	1.024	0.550	1.52	1.750
FS0403-20-20	1.258	1-11/16-12	1.024	0.550	1.52	1.750
FS0403-20-24	1.258	2-12	1.260	0.550	1.52	2.125
FS0403-24-20	1.508	1-11/16-12	1.024	0.550	1.52	2.125
FS0403-24-24	1.508	2-12	1.260	0.550	1.52	2.125

*E,G dimensions are for silver brazing.(SAEII453)

MFS Tube Spud
FS0403-TS Series

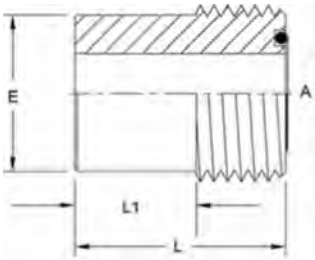

PART NO.SIZE	E* DIA	A THREAD	E DRILL	A DRILL	11 LGTH	L LGTH
FS0403-TS-04-04	0.468	9/16-18	0.172	0.172	0.454	0.735
FS0403-TS-08-08	0.719	13/16-16	0.378	0.378	0.292	0.694
FS0403-TS-10-10	0.891	1-14	0.484	0.484	0.570	1.070
FS0403-TS-12-12	1.069	1-3/16-12	0.609	0.609	0.408	0.945
FS0403-TS-16-16	1.319	1-7/16-12	0.811	0.811	0.473	1.029

*E dimensions are for silver brazing.(SAE J1453)

O-Ring Face Seal Fittings

Bore-MFS Bulkhead Straight
FS0406 Series

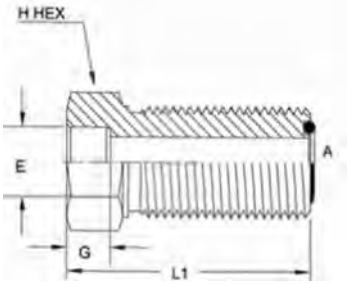

B-006

PART NO.SIZE	E* BORE	A THREAD	A DRILL	G DEPTH	LI LGTH	H HEX
FS0406-08-08	0.506	13/16-16	0.378	0.330	1.91	0.875
FS0406-10-08	0.631	13/16-16	0.378	0.330	1.91	1.062

*E,G dimensions are for silver brazing.(SAE J1453)
'Locknut style available. Use part number F$0406-LN-(size)

MFS-MFS Straight
FS2403 Series

SAE# 520101

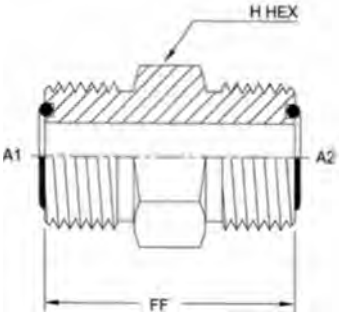

PART NO.SIZE	A1 TUBE O.D.	A2 TUBE O.D.	A1 THREAD	A2 THREAD	A1 DRILL	A2 DRILL	FF LGTH	H HEX
FS2403-04-04	1/4	1/4	9/16-18	9/16-18	0.172	0.172	1.08	0.625
FS2403-06-04	3/8	1/4	11/16-16	9/16-18	0.264	0.172	1.17	0.750
FS2403-06-06	3/8	3/8	11/16-16	11/16-16	0.264	0.264	1.22	0.750
FS2403-08-06	1/2	3/8	13/16-16	11/16-16	0.378	0.264	1.33	0.875
FS2403-08-08	1/2	1/2	13/16-16	13/16-16	0.378	0.378	1.39	0.875
FS2403-10-08	5/8	1/2	1-14	13/16-16	0.484	0.378	1.57	1.062
FS2403-10-10	5/8	5/8	1-14	1-14	0.484	0.484	1.68	1.062
FS2403-12-08	3/4	1/2	1-3/16-12	13/16-16	0.609	0.378	1.69	1.250
FS2403-12-10	3/4	5/8	1-3/16-12	1-14	0.609	0.484	1.80	1.250
FS2403-12-12	3/4	3/4	1-3/16-12	1-3/16-12	0.609	0.609	1.86	1.250
FS2403-16-12	1	3/4	1-7/16-12	1-3/16-12	0.811	0.609	1.92	1.500
FS2403-16-16	1	1	1-7/16-12	1-7/16-12	0.811	0.811	1.94	1.500
FS2403-20-16	1-1/4	1	1-11/16-12	1-7/16-12	1.024	0.811	2.02	1.750
FS2403-20-20	1-1/4	1-1/4	1-11/16-12	1-11/16-12	1.024	1.024	2.02	1.750
FS2403-24-20	1-1/2	1-1/4	2-12	1-11/16-12	1.260	1.024	2.09	2.125
FS2403-24-24	1-1/2	1-1/2	2-12	2-12	1.260	1.260	2.09	2.125

MFS-MP Straight
FS2404 Series

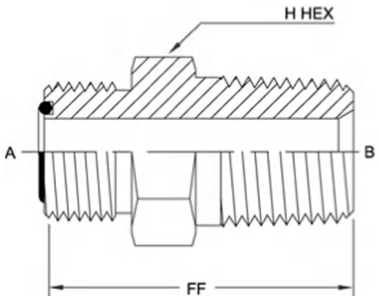

PART NO.SIZE	TUBE O.D.	A THREAD	B THREAD	A DRILL	B DRILL	FF LGTH	H HEX
FS2404-04-02	1/4	9/16-18	1/8-27	0.172	0.188	1.08	0.625
FS2404-04-04	1/4	9/16-18	1/4-18	0.172	0.281	1.26	0.625
FS2404-04-06	1/4	9/16-18	3/8-18	0.172	0.406	1.26	0.750
FS2404-04-08	1/4	9/16-18	1/2-14	0.172	0.531	1.50	0.938
FS2404-06-02	3/8	11/16-16	1/8-27	0.264	0.188	1.16	0.750
FS2404-06-04	3/8	11/16-16	1/4-18	0.264	0.281	1.34	0.750
FS2404-06-06	3/8	11/16-16	3/8-18	0.264	0.406	1.34	0.750
FS2404-06-08	3/8	11/16-16	1/2-14	0.264	0.531	1.55	0.938
FS2404-08-04	1/2	13/16-16	1/4-18	0.378	0.281	1.45	0.875
FS2404-08-06	1/2	13/16-16	3/8-18	0.378	0.406	1.45	0.875
FS2404-08-08	1/2	13/16-16	1/2-14	0.378	0.531	1.64	0.938
FS2404-08-12	1/2	13/16-16	3/4-14	0.378	0.719	1.69	1.250
FS2404-08-16	1/2	13/16-16	1-11-1/2	0.378	0.938	1.80	1.375
FS2404-10-08	5/8	1-14	1/2-14	0.484	0.531	1.82	1.062
FS2404-10-12	5/8	1-14	3/4-14	0.484	0.719	1.82	1.250
FS2404-10-16	5/8	1-14	1-11-1/2	0.484	0.938	1.95	1.375
FS2404-12-08	3/4	1-3/16-12	1/2-14	0.609	0.531	1.94	1.250
FS2404-12-12	3/4	1-3/16-12	3/4-14	0.609	0.719	1.94	1.250
FS2404-12-16	3/4	1-3/16-12	1-11-1/2	0.609	0.938	2.06	1.312
FS2404-16-12	1	1-7/16-12	3/4-14	0.811	0.719	2.00	1.500
FS2404-16-16	1	1-7/16-12	1-11-1/2	0.811	0.938	2.19	1.500
FS2404-16-20	1	1-7/16-12	1-1/4-11-1/2	0.811	1.250	2.30	1.688
FS2404-16-24	1	1-7/16-12	1-1/2-11-1/2	0.811	1.500	2.40	2.000
FS2404-20-16	1-1/4	1-11/16-12	1-11-1/2	1.024	0.938	2.27	1.750
FS2404-20-20	1-1/4	1-11/16-12	1-1/4-11-1/2	1.024	1.250	2.30	1.750
FS2404-24-24	1-1/2	2-12	1-1/2-11-1/2	1.260	1.500	2.40	2.125

FS-FP Straight
FS2405 Series

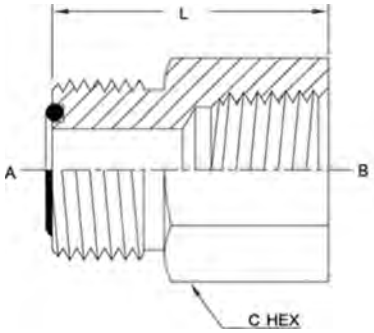

PART NO.SIZE	TUBE O.D.	A THREAD	B NPTF	A DRILL	L LGTH	C HEX
FS2405-04-04	1/4	9/16-18	1/4-18	0.172	1.23	0.750
FS2405-06-04	3/8	11/16-16	1/4-18	0.264	1.29	0.750

O-Ring Face Seal Fittings

FFS-MFS Tube End Reducar
FS2406 Series

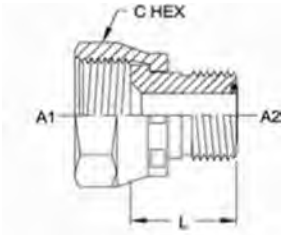

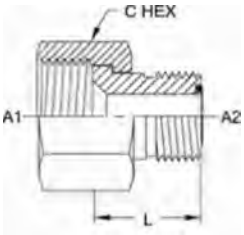

B-008

SAE# 520123

PART NG.SIZE	A1TUBE O.D.	A2 TUBE O.D.	A1 THREAD	A2 THREAD	A2 DRILL	L LGTH	C HEX
FS2406-06-04	3/8	1/4	11/16-16	9/16-18	0.172	0.770	0.812
FS2406-08-04*	1/2	1/4	13/16-16	9/16-18	0.172	0.860	0.938
FS2406-08-06	1/2	3/8	13/16-16	11/16-16	0.264	0.880	0.938
FS2406-10-04*	5/8	1/4	1 -14	9/16-18	0.172	0.900	1.125
FS2406-10-06*	5/8	3/8	1 -14	11/16-16	0.264	0.950	1.125
FS2406-10-08*	5/8	1/2	1 -14	13/16-16	0.378	1.010	1.125
FS2406-12-04*	3/4	1/4	1-3/16-12	9/16-18	0.172	0.980	1.375
FS2406-12-06*	3/4	3/8	1-3/16-12	11/16-16	0.264	1.030	1.375
FS2406-12-08*	3/4	1/2	1-3/16-12	13/16-16	0.378	1.090	1.375
FS2406-12-10	3/4	5/8	1-3/16-12	1-14	0.484	1.160	1.375
FS2406-12-16	3/4	1	1-3/16-12	1-7/16-12	0.609	1.240	1.375
FS2406-16-08*	1	1/2	1-7/16-12	13/16-16	0.378	1.150	1.625
FS2406-16-10*	1	5/8	1-7/16-12	1-14	0.484	1.260	1.625
FS2406-16-12	1	3/4	1-7/16-12	1-3/16-12	0.609	1.300	1.625
FS2406-16-20	1	1-1/4	1-7/16-12	1-11/16-12	0.811	1.320	1.625
FS2406-20-12*	1-1/4	3/4	1-11/16-12	1-3/16-12	0.609	1.320	1.875
FS2406-20-16	1-1/4	1	1-11/16-12	1-7/16-12	0.811	1.514	1.875
FS2406-20-24	1-1/4	1-1/2	1-11/16-12	2-12	1.260	1.514	1.875
FS2406-24-16*	1-1/2	1	2-12	1-7/16-12	0.811	1.340	2.250
FS2406-24-20*	1-1/2	1-1/4	2-12	1-11/16-12	1.024	1.340	2.250

'Note: Two-Piece Assembly

MFS Plug
FS2408 Series

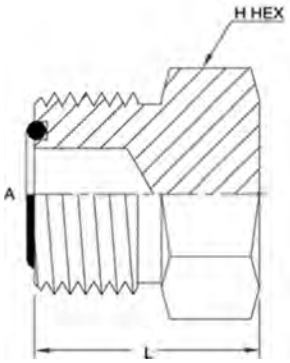

SAE# 520109

PART NO.SIZE	A THREAD	L LGTH	H HEX
FS2408-04	9/16-18	0.660	0.625
FS2408-06	11/16-16	0.750	0.750
FS2408-08	13/16-16	0.850	0.875
FS2408-10	1-14	1.020	1.062
FS2408-12	1-3/16-12	1.080	1.250
FS2408-16	1-7/16-12	1.090	1.500
FS2408-20	1-11/16-12	1.090	1.750
FS2408-24	2-12	1.090	2.125

MFS-MFS 90°
FS2500 Series

SAE# 520201

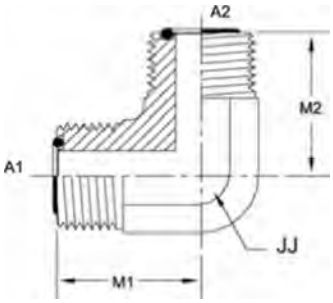

PART NO.SIZE	A1 TUBE O.D.	A2TUBE O.D.	A1 THREAD	A2 THREAD	A1 DRILL	A2 DRILL	MI LGTH	M2 LGTH	JJ FLATS
FS2500-04-04-FG	1/4	1/4	9/16-18	9/16-18	0.172	0.172	0.85	0.85	0.562
FS2500-06-06-FG	3/8	3/8	11/16-16	11/16-16	0.264	0.264	0.98	0.98	0.750
FS2500-08-08-FG	1/2	1/2	13/16-16	13/16-16	0.378	0.378	1.10	1.10	0.750
FS2500-10-10-FG	5/8	5/8	1-14	1-14	0.484	0.484	1.31	1.31	1.062
FS2500-12-08-FG	3/4	1/2	1-3/16-12	13/16-16	0.609	0.378	1.47	1.32	1.188
FS2500-12-12-FG	3/4	3/4	1-3/16-12	1-3/16-12	0.609	0.609	1.47	1.47	1.188
FS2500-16-12-FG	1	3/4	1-7/16-12	1-3/16-12	0.811	0.609	1.64	1.62	1.438
FS2500-16-16-FG	1	1	1-7/16-12	1-7/16-12	0.811	0.811	1.64	1.64	1.438
FS2500-20-16-FG	1-1/4	1	1-11/16-12	1-7/16-12	1.024	0.811	1.76	1.76	1.625
FS2500-20-20-FG	1-1/4	1-1/4	1-11/16-12	1-11/16-12	1.024	1.024	1.76	1.76	1.625
FS2500-24-20-FG	1-1/2	1-1/4	2-12	1-11/16-12	1.260	1.024	1.92	1.92	1.875
FS2500-24-24-FG	1-1/2	1-1/2	2-12	2-12	1.260	1.260	1.92	1.92	1.875

MFS-MP 90°
FS2501 Series

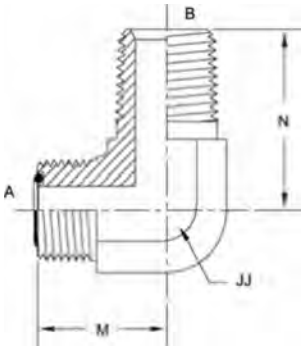

PART NO.SIZE	TUBE O.D.	A THREAD	B THREAD	A DRILL	B DRILL	M LGTH	N LGTH	JJ FLATS
FS2501-04-02-FG	1/4	9/16-18	1/8-27	0.172	0.188	0.85	0.90	0.562
FS2501-04-04-FG	1/4	9/16-18	1/4-18	0.172	0.281	0.85	1.09	0.562
FS2501-04-06-FG	1/4	9/16-18	3/8-18	0.172	0.406	0.92	1.22	0.750
FS2501-06-02-FG	3/8	11/16-16	1/8-27	0.264	0.188	0.98	1.03	0.750
FS2501-06-04-FG	3/8	11/16-16	1/4-18	0.264	0.281	0.98	1.22	0.750
FS2501-06-06-FG	3/8	11/16-16	3/8-18	0.264	0.406	0.98	1.22	0.750
FS2501-06-08-FG	3/8	11/16-16	1/2-14	0.264	0.531	1.10	1.47	0.875
FS2501-08-04-FG	1/2	13/16-16	1/4-18	0.378	0.281	1.10	1.22	0.750
FS2501-08-06-FG	1/2	13/16-16	3/8-18	0.378	0.406	1.10	1.22	0.750
FS2501-08-08-FG	1/2	13/16-16	1/2-14	0.378	0.531	1.10	1.47	0.875
FS2501-08-12-FG	1/2	13/16-16	3/4-14	0.378	0.719	1.21	1.59	1.062
FS2501-10-06-FG	5/8	1-14	3/8-18	0.484	0.406	1.31	1.40	1.062
FS2501-10-08-FG	5/8	1-14	1/2-14	0.484	0.531	1.31	1.59	1.062
FS2501-10-12-FG	5/8	1-14	3/4-14	0.484	0.719	1.31	1.59	1.062
FS2501-12-08-FG	3/4	1-3/16-12	1/2-14	0.609	0.531	1.47	1.59	1.188
FS2501-12-12-FG	3/4	1-3/16-12	3/4-14	0.609	0.719	1.47	1.59	1.188
FS2501-12-16-FG	3/4	1-3/16-12	1-11-1/2	0.609	0.938	1.62	1.97	1.312
FS2501-16-12-FG	1	1-7/16-12	3/4-14	0.811	0.719	1.64	1.78	1.438
FS2501-16-16-FG	1	1-7/16-12	1-11-1/2	0.811	0.938	1.64	1.97	1.438
FS2501-16-20-FG	1	1-7/16-12	1-1/4-11-1/2	0.811	1.250	1.76	2.38	1.625
FS2501-20-16-FG	1-1/4	1-11/16-12	1-11-1/2	1.024	0.938	1.76	2.35	1.625
FS2501-20-20-FG	1-1/4	1-11/16-12	1-1/4-11-1/2	1.024	1.250	1.76	2.38	1.625
FS2501-24-24-FG	1-1/2	2-12	1-1/2-11-1/2	1.260	1.500	1.92	2.64	1.875

O-Ring Face Seal Fittings

MFS-MP-45⁰
FS2503 Series

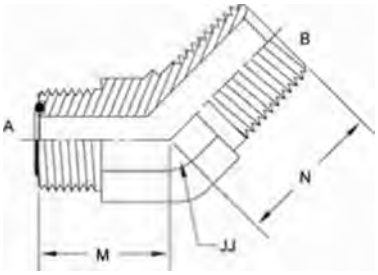

B-010

PART NO.SIZE	TUBE 0.0.	A THREAD	B THREAD	A DRILL	B DRILL	M LGTH	N LGTH	JJ FLATS
FS2503-04-02-FG	1/4	9/16-18	1/8-27	0.172	0.188	0.63	0.67	0.562
FS2503-04-04-FG	1/4	9/16-18	1/4-18	0.172	0.281	0.63	0.86	0.562
FS2503-06-04-FG	3/8	11/16-16	1/4-18	0.264	0.281	0.74	0.95	0.750
FS2503-06-06-FG	3/8	11/16-16	3/8-18	0.264	0.406	0.74	0.95	0.750
FS2503-06-08-FG	3/8	11/16-16	1/2-14	0.264	0.531	0.79	1.17	0.875
FS2503-08-06-FG	1/2	13/16-16	3/8-18	0.378	0.406	0.80	0.95	0.750
FS2503-08-08-FG	1/2	13/16-16	1/2-14	0.378	0.531	0.82	1.17	0.875
FS2503-08-12-FG	1/2	13/16-16	3/4-14	0.378	0.719	0.82	1.20	1.062
FS2503-10-08-FG	5/8	1-14	1/2-14	0.484	0.531	0.92	1.20	1.062
FS2503-12-08-FG	3/4	1-3/16-12	1/2-14	0.609	0.531	1.02	1.20	1.188
FS2503-12-12-FG	3/4	1-3/16-12	3/4-14	0.609	0.719	1.02	1.20	1.188
FS2503-16-16-FG	1	1-7/16-12	1-11-1/2	0.811	0.938	1.18	1.48	1.438
FS2503-20-20-FG	1-1/4	1-11/16-12	1-1/4-11-1/2	1.024	1.250	1.26	1.67	1.625

MFS-MFS-MP Tee
FS2601 Series

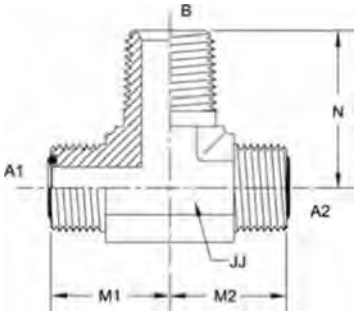

PART NO.SIZE	TUBE O.D.	A1 THREAD	A2 THREAD	B THREAD	A1 DRILL	A2 DRILL	B DRILL	MI LGTH	M2 LGTH	N LGTH	JJ FLATS
FS2601 -04-04-04-FG	1/4	9/16-18	9/16-18	1/4-18	0.172	0.172	0.281	0.85	0.85	1.09	0.562
FS2601 -06-06-04-FG	3/8	11/16-16	11/16-16	1/4-18	0.264	0.264	0.281	0.98	0.98	1.22	0.750
FS2601 -06-06-06-FG	3/8	11/16-16	11/16-16	3/8-18	0.264	0.264	0.406	0.98	0.98	1.22	0.750
FS2601 -08-08-08-FG	1/2	13/16-16	13/16-16	1/2-14	0.378	0.378	0.531	1.10	1.10	1.47	0.875
FS2601-10-10-08-FG	5/8	1-14	1-14	1/2-14	0.484	0.484	0.531	1.31	1.31	1.59	1.062
FS2601-12-12-12-FG	3/4	1-3/16-12	1-3/16-12	3/4-14	0.609	0.609	0.719	1.47	1.47	1.59	1.188
FS2601-16-16-16-FG	1	1-7/16-12	1-7/16-12	1-11-1/2	0.811	0.811	0.938	1.64	1.64	1.97	1.438
FS2601 -20-20-20-FG	1-1/4	1-11/16-12	1-11/16-12	1-1/4-11-1/2	1.024	1.024	1.250	1.76	1.76	2.38	1.625

MFS-MFS-MFS Tee
FS2603 Series

SAE# 520401

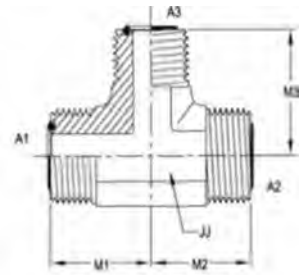

PART NO.SIZE	TUBE O.D.	A1 THREAD	A2 THREAD	A3 THREAD	A1 DRILL	A2 DRILL	A3 DRILL	MI LGTH	M2 LGTH	M3 LGTH	JJ FLATS
FS2603-04-04-04-FG	1/4	9/16-18	9/16-18	9/16-18	0.172	0.172	0.172	0.85	0.85	0.85	0.562
FS2603-06-06-06-FG	3/8	11/16-16	11/16-16	11/16-16	0.264	0.264	0.264	0.98	0.98	0.98	0.750
FS2603-06-06-08-FG	3/8 1/2	11/16-16	11/16-16	13/16-16	0.264	0.264	0.378	1.04	1.04	1.10	0.750
FS2603-06-08-08-FG	3/8 1/2	11/16-16	13/16-16	13/16-16	0.264	0.378	0.378	1.04	1.10	1.10	0.750
FS2603-08-08-08-FG	1/2	13/16-16	13/16-16	13/16-16	0.378	0.378	0.378	1.10	1.10	1.10	0.750
FS2603-08-08-10-FG	1/2 5/8	13/16-16	13/16-16	1-14	0.378	0.378	0.484	1.21	1.21	1.31	1.062
FS2603-10-10-10-FG	5/8	1-14	1-14	1-14	0.484	0.484	0.484	1.31	1.31	1.31	1.062
FS2603-12-12-12-FG	3/4	1-3/16-12	1-3/16-12	1-3/16-12	0.609	0.609	0.609	1.47	1.47	1.47	1.188
FS2603-16-16-16-FG	1	1-7/16-12	1-7/16-12	1-7/16-12	0.811	0.811	0.811	1.64	1.64	1.64	1.438
FS2603-20-20-20-FG	1-1/4	1-11/16-12	1-11/16-12	1-11/16-12	1.024	1.024	1.024	1.76	1.76	1.76	1.625
FS2603-24-24-24-FG	1-1/2	2-12	2-12	2-12	1.260	1.260	1.260	1.92	1.92	1.92	1.875
FS2603-32-32-32-FG	2	2-1/2-12	2-1/2-12	2-1/2-12	1.772	1.772	1.772	2.52	2.52	2.52	2.562

MFS-MP-MFS Tee
FS2605 Series

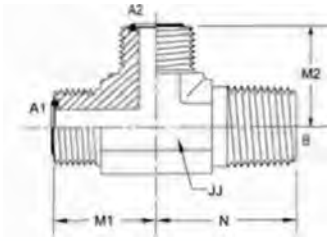

PART NO.SIZE	TUBE O.D.	A1 THREAD	B THREAD	A2 THREAD	A1 ORILL	B DRILL	A2 DRILL	MI LGTH	N LGTH	M2 LGTH	JJ FLATS
FS2605-04-04-04-FG	1/4	9/16-18	1/4-18	9/16-18	0.172	0.281	0.172	0.85	1.09	0.85	0.562
FS2605-06-06-06-FG	3/8	11/16-16	3/8-18	11/16-16	0.264	0.406	0.264	0.98	1.22	0.98	0.750
FS2605-08-08-08-FG	1/2	13/16-16	1/2-14	13/16-16	0.378	0.531	0.378	1.10	1.47	1.10	0.875
FS2605-12-12-12-FG	3/4	1-3/16-12	3/4-14	1-3/16-12	0.609	0.719	0.609	1.47	1.59	1.47	1.188
FS2605-16-16-16-FG	1	1-7/16-12	1-11-1/2	1-7/16-12	0.811	0.938	0.811	1.64	1.97	1.64	1.438

MFS-MFS-MFS-MFS Cross
FS2650 Series

SAE# 520501

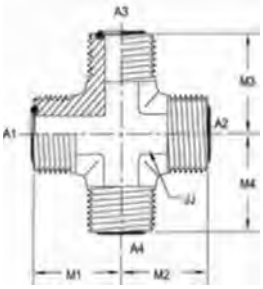

PART NO.SIZE	TUBE O.D.	A1 THREAD	A2 THREAD	A3 THREAD	A4 THREAD	A1 DRILL	A2 DRILL	A3 DRILL	A4 DRILL	MI LGTH	M2 LGTH	M3 LGTH	M4 LGTH	JJ FLATS
FS2650-04-04-04-04-FG	1/4	9/16-18	9/16-18	9/16-18	9/16-18	0.172	0.172	0.172	0.172	0.85	0.85	0.85	0.85	0.562
FS2650-06-06-06-06-FG	3/8	11/16-16	11/16-16	11/16-16	11/16-16	0.264	0.264	0.264	0.264	0.98	0.98	0.98	0.98	0.750
FS2650-08-08-08-08-FG	1/2	13/16-16	13/16-16	13/16-16	13/16-16	0.378	0.378	0.378	0.378	1.10	1.10	1.10	1.10	0.750
FS2650-10-10-10-10-FG	5/8	1-14	1-14	1-14	1-14	0.484	0.484	0.484	0.484	1.31	1.31	1.31	1.31	1.062
FS2650-12-12-12-12-FG	3/4	1-3/16-12	1-3/16-12	1-3/16-12	1-3/16-12	0.609	0.609	0.609	0.609	1.47	1.47	1.47	1.47	1.188
FS2650-16-16-16-16-FG	1	1-7/16-12	1-7/16-12	1-7/16-12	1-7/16-12	0.811	0.811	0.811	0.811	1.64	1.64	1.64	1.64	1.438
FS2650-20-20-20-20-FG	1-1/4	1-11/16-12	1-11/16-12	1-11/16-12	1-11/16-12	1.024	1.024	1.024	1.024	1.76	1.76	1.76	1.76	1.625
FS2650-24-24-24-24-FG	1-1/2	2-12	2-12	2-12	2-12	1.260	1.260	1.260	1.260	1.92	1.92	1.92	1.92	1.875

O-Ring Face Seal Fittings

MFS-MFS Bulkhead Union
FS2700 Series

SAE# 520601

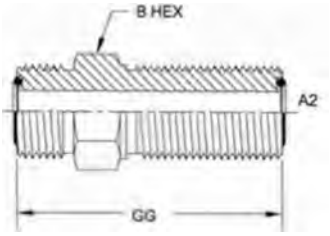

B-012

PART NO.SIZE	TUBE O.D.	A1 THREAD	A2 THREAD	A1 DRILL	A2 DRILL	GD LGTH	B HEX
FS2700-04-04	1/4	9/16-18	9/16-18	0.172	0.172	1.90	0.812
FS2700-06-06	3/8	11/16-16	11/16-16	0.264	0.264	2.09	1.000
FS2700-06-08	3/8 1/2	11/16-16	13/16-16	0.264	0.378	2.24	1.125
FS2700-08-08	1/2	13/16-16	13/16-16	0.378	0.378	2.30	1.125
FS2700-10-10	5/8	1-14	1-14	0.484	0.484	2.62	1.312
FS2700-12-06	3/4	1-3/16-12	11/16-16	0.609	0.264	2.42	1.500
FS2700-12-12	3/4	1-3/16-12	1-3/16-12	0.609	0.609	2.72	1.500
FS2700-16-16	1	1-7/16-12	1-7/16-12	0.811	0.811	2.76	1.750
FS2700-20-20	1-1/4	1-11/16-12	1-11/16-12	1.024	1.024	2.76	2.000
FS2700-24-24	1-1/2	2-12	2-12	1.260	1.260	2.76	2.375

•Locknut style available. Use part number FS2700-LN-(size)

MFS-MFS Bulkhead 90°
FS2701 Series

SAE# 520701

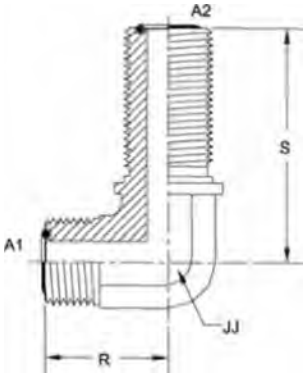

PART NO.SIZE	TUBE O.D.	A1 THREAD	A2 THREAD	A1 DRILL	A2 DRILL	R LGTH	S LGTH	JJ FLATS
FS2701-04-04-FG	1/4	9/16-18	9/16-18	0.172	0.172	0.89	1.85	0.562
FS2701-06-06-FG	3/8	11/16-16	11/16-16	0.264	0.264	1.02	2.05	0.750
FS2701-06-08-FG	3/8 1/2	11/16-16	13/16-16	0.264	0.378	1.08	2.18	0.750
FS2701-08-08-FG	1/2	13/16-16	13/16-16	0.378	0.378	1.14	2.18	0.750
FS2701-08-10-FG	1/2 5/8	13/16-16	1-14	0.378	0.484	1.26	2.48	1.062
FS2701-10-10-FG	5/8	1-14	1-14	0.484	0.484	1.36	2.48	1.062
FS2701-12-12-FG	3/4	1-3/16-12	1-3/16-12	0.609	0.609	1.52	2.65	1.188
FS2701-16-16-FG	1	1-7/16-12	1-7/16-12	0.811	0.811	1.67	2.80	1.438
FS2701-20-20-FG	1-1/4	1-11/16-12	1-11/16-12	1.024	1.024	1.79	2.97	1.625
FS2701-24-24-FG	1-1/2	2-12	2-12	1.260	1.260	1.95	3.13	1.875

•Locknut style available. Use part number FS2701-LN-(size)

MFS-MFS Bulkhead 45°
FS2702 Series

SAE# 520801

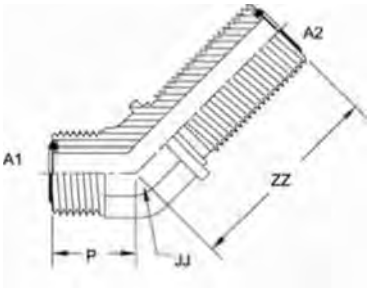

PART N0.SIZE	TUBE O.D.	A1 THREAD	A2 THREAD	A1 DRILL	A2 DRILL	P LGTH	ZZ LGTH	JJ FLATS
FS2702-04-04-FG	1/4	9/16-18	9/16-18	0.172	0.172	0.63	1.73	0.562
FS2702-06-06-FG	3/8	11/16-16	11/16-16	0.264	0.264	0.74	1.91	0.750
FS2702-06-08-FG	3/8 1/2	11/16-16	13/16-16	0.264	0.378	0.74	2.01	0.750
FS2702-08-08-FG	1/2	13/16-16	13/16-16	0.378	0.378	0.80	2.01	0.750
FS2702-10-08-FG	5/8 1/2	13/16-16	1-14	0.378	0.484	0.92	2.13	1.062
FS2702-10-10-FG	5/8	1-14	1-14	0.484	0.484	0.92	2.23	1.062
FS2702-12-12-FG	3/4	1-3/16-12	1-3/16-12	0.609	0.609	1.02	2.39	1.188
FS2702-16-16-FG	1	1-7/16-12	1-7/16-12	0.811	0.811	1.18	2.57	1.438
FS2702-20-20-FG	1-1/4	1-11/16-12	1-11/16-12	1.024	1.024	1.26	2.64	1.625
FS2702-24-24-FG	1-1/2	2-12	2-12	1.260	1.260	1.45	2.64	1.875

'Locknut style available. Use part number FS2702-LN-(size)

MFS-MFS-MFS Bulkhead Tee
FS2703 Series

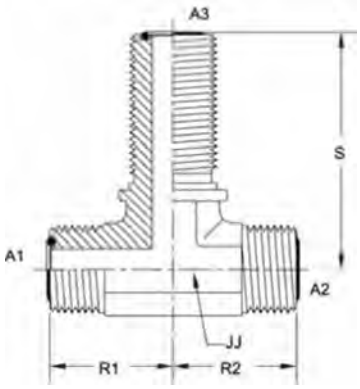

PART NO.SIZE	TUBE O.D.	A1 THREAO	A2 THREAD	A3 THREAO	A1 DRILL	A2 DRILL	A3 DRILL	R1 LGTH	R2 LGTH	S LGTH	JJ FLATS
FS2703-04-04-04-FG	1/4	9/16-18	9/16-18	9/16-18	0.172	0.172	0.172	0.89	0.89	1.85	0.562
FS2703-06-06-06-FG	3/8	11/16-16	11/16-16	11/16-16	0.264	0.264	0.264	1.02	1.02	2.05	0.750
FS2703-08-08-08-FG	1/2	13/16-16	13/16-16	13/16-16	0.378	0.378	0.378	1.14	1.14	2.18	0.750
FS2703-12-12-12-FG	5/8	1-3/16-12	1-3/16-12	1-3/16-12	0.609	0.609	0.609	1.52	1.52	2.65	1.188
FS2703-16-16-16-FG	1	1-7/16-12	1-7/16-12	1-7/16-12	0.811	0.811	0.811	1.67	1.67	2.80	1.438

'Locknut style available. Use part number FS2703-LN-(size)

O-Ring Face Seal Fittings

MFS-MFS-MFS Bulkhead Run Tee
FS2704 Series

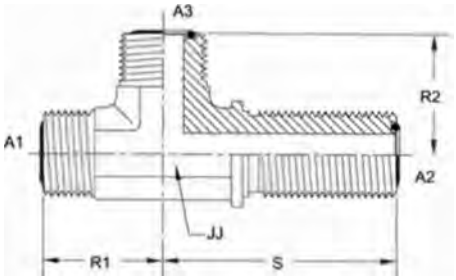

B-014

SAE# 520201

PART NO.SIZE	TUBE O.D.	A1 THREAD	A2 THREAD	A3 THREAD	A1 DRILL	A2 DRILL	A3 ORILL	R1 LGTH	S LGTH	R2 LGTH	JJ FLATS
FS2704-04-04-04-FG	1/4	9/16-18	9/16-18	9/16-18	0.172	0.172	0.172	0.89	1.85	0.89	0.562
FS2704-06-06-06-FG	3/8	11/16-16	11/16-16	11/16-16	0.264	0.264	0.264	1.02	2.05	1.02	0.750
FS2704-08-08-08-FG	1/2	13/16-16	13/16-16	13/16-16	0.378	0.378	0.378	1.14	2.18	1.14	0.750
FS2704-10-10-10-FG	5/8	1-14	1-14	1-14	0.484	0.484	0.484	1.36	2.48	1.36	1.062
FS2704-12-12-12-FG	3/4	1-3/16-12	1-3/16-12	1-3/16-12	0.609	0.609	0.609	1.52	2.65	1.52	1.188
FS2704-16-16-16-FG	1	1-7/16-12	1-7/16-12	1-7/16-12	0.811	0.811	0.811	1.67	2.80	1.67	1.438
FS2704-20-20-20-FG	1-1/4	1-11/16-12	1-11/16-12	1-11/16-12	1.024	1.024	1.024	1.79	2.97	1.79	1.625
FS2704-24-24-24-FG	1-1/2	2-12	2-12	2-12	1.260	1.260	1.260	1.95	3.13	1.95	1.875

'Locknut style available. Use part number F$2704-LN-(size)

MFS Bulkhead-MORB Straight
FS2764 Series

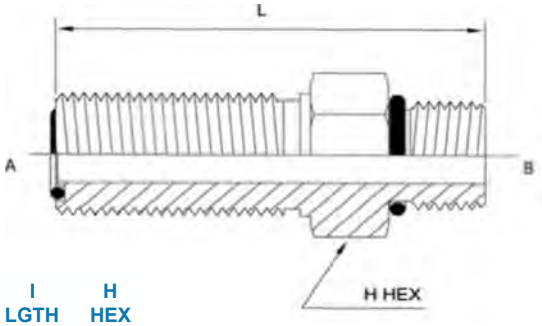

PART NO.SIZE	TUBE O.D.	A THREAD	B MORB	A DRILL	B DRILL	I LGTH	H HEX
FS2764-04-04	1/4	9/16-18	7/16-20	0.172	0.172	2.08	0.812
FS2764-04-06	3/8	9/16-18	9/16-18	0.172	0.264	2.12	0.812
FS2764-06-06	3/8	11/16-16	9/16-18	0.264	0.264	2.25	1.000
FS2764-08-08	1/2	13/16-16	3/4-16	0.378	0.378	2.46	1.125
FS2764-10-10	5/8	1-14	7/8-14	0.484	0.484	2.74	1.312
FS2764-12-12	3/4	1-3/16-12	1-1/16-12	0.609	0.609	2.89	1.500
FS2764-16-16	1	1-7/16-12	1-5/16-12	0.811	0.811	2.90	1.750
FS2764-20-20	1-1/4	1-11/16-12	1-5/8-12	1.024	1.024	2.90	2.000
FS2764-24-24	1-1/2	2-12	1-7/8-12	1.260	1.260	2.90	2.375

'Locknut style available. Use part number F$2764-LN-(size)

PART NO.SIZE	TUBE D.D.	d2 WIDTH	dl 1.0.
FS4000-04	1/4	0.70	0.301
FS4000-06	3/8	0.70	0.364
FS4000-08	1/2	0.70	0.489
FS4000-10	5/8	0.70	0.614
FS4000-12	3/4	0.70	0.739
FS4000-16	1	0.70	0.926
FS4000-20	1-1/4	0.70	1.176
FS4000-24	1-1/2	0.70	1.489
FS4000-32	2	0.70	

Buna O-ring
FS4000 Series

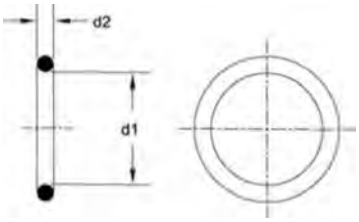

SAE# J 5 1 5 TYPE CH

Viton O-ring
FS4001 Series

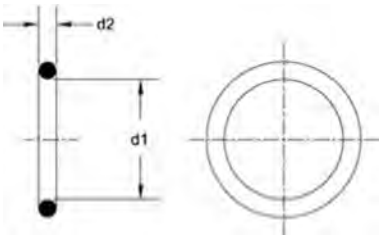

PART NO.SIZE	TUBE 0.0.	d2 WIDTH	dI 1.0.
FS4001-04	1/4	0.70	0.301
FS4001-06	3/8	0.70	0.364
FS4001-08	1/2	0.70	0.489
FS4001-10	5/8	0.70	0.614
FS4001-12	3/4	0.70	0.739
FS4001-16	1	0.70	0.926
FS4001-20	1-1/4	0.70	1.176
FS4001-24	1-1/2	0.70	1.489

Silver Braze Ring
FS6001 Series

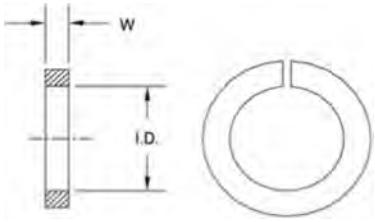

PART NO.SIZE	TUBE 0.0.	W WIDTH	1.0.
FS6001 -04	1/4	0.047	0.260
FS6001-06	3/8	0.071	0.389
FS6001-08	1/2	0.071	0.515
FS6001-10	5/8	0.071	0.642
FS6001-12	3/4	0.079	0.764
FS6001-16	1	0.079	1.020
FS6001-20	1-1/4	0.079	1.264

O-Ring Face Seal Fittings

MFS-MORB Straight
FS6400-0 Series

SAE# 520120

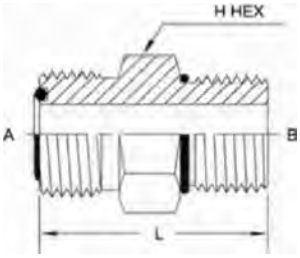

B-016

PART NO.SIZE	TUBE O.D.	A THREAD	8 THREAD	A DRILL	B DRILL	L LGTH	H HEX
FS6400-04-03-0	1/4	9/16-18	3/8-24	0.172	0.118	1.074	0.625
FS6400-04-04-0	1/4	9/16-18	7/16-20	0.172	0.172	1.133	0.625
FS6400-04-05-0	1/4	9/16-18	1/2-20	0.172	0.236	1.163	0.750
FS6400-04-06-0	1/4	9/16-18	9/16-18	0.172	0.264	1.202	0.750
FS6400-04-08-0	1/4	9/16-18	3/4-16	0.172	0.378	1.321	0.875
FS6400-04-10-0	1/4	9/16-18	7/8-14	0.172	0.484	1.480	1.062
FS6400-04-12-0	1/4	9/16-18	1-1/16-12	0.172	0.609	1.638	1.250
FS6400-06-03-0	3/8	11/16-16	3/8-24	0.264	0.118	1.284	0.750
FS6400-06-04-0	3/8	11/16-16	7/16-20	0.264	0.172	1.343	0.750
FS6400-06-05-0	3/8	11/16-16	1/2-20	0.264	0.236	1.213	0.750
FS6400-06-06-0	3/8	11/16-16	9/16-18	0.264	0.264	1.252	0.750
FS6400-06-08-0	3/8	11/16-16	3/4-16	0.264	0.378	1.381	0.875
FS6400-06-10-0	3/8	11/16-16	7/8-14	0.264	0.484	1.530	1.062
FS6400-06-12-0	3/8	11/16-16	1-1/16-12	0.264	0.609	1.688	1.250
FS6400-06-16-0	3/8	11/16-16	1-5/16-12	0.264	0.811	1.728	1.500
FS6400-08-04-0	1/2	13/16-16	7/16-20	0.378	0.172	1.433	0.875
FS6400-08-06-0	1/2	13/16-16	9/16-18	0.378	0.264	1.472	0.875
FS6400-08-08-0	1/2	13/16-16	3/4-16	0.378	0.378	1.441	0.875
FS6400-08-10-0	1/2	13/16-16	7/8-14	0.378	0.484	1.590	1.062
FS6400-08-12-0	1/2	13/16-16	1-1/16-12	0.378	0.609	1.748	1.250
FS6400-08-16-0	1/2	13/16-16	1-5/16-12	0.378	0.811	1.788	1.500
FS6400-10-06-0	5/8	1-14	9/16-18	0.484	0.264	1.642	1.062
FS6400-10-08-0	5/8	1-14	3/4-16	0.484	0.378	1.781	1.062
FS6400-10-10-0	5/8	1-14	7/8-14	0.484	0.484	1.700	1.062
FS6400-10-12-0	5/8	1-14	1-1/16-12	0.484	0.609	1.858	1.250
FS6400-10-14-0	5/8	1-14	1-3/16-12	0.484	0.709	1.890	1.375
FS6400-12-06-0	3/4	1-3/16-12	9/16-18	0.609	0.264	1.772	1.250
FS6400-12-08-0	3/4	1-3/16-12	3/4-16	0.609	0.378	1.911	1.250
FS6400-12-10-0	3/4	1-3/16-12	7/8-14	0.609	0.484	1.990	1.250
FS6400-12-12-0	3/4	1-3/16-12	1-1/16-12	0.609	0.609	1.918	1.250
FS6400-12-16-0	3/4	1-3/16-12	1-5/16-12	0.609	0.811	1.958	1.500
FS6400-12-20-0	3/4	1-3/16-12	1-5/8-12	0.609	1.024	2.038	1.875
FS6400-16-08-0	1	1-7/16-12	3/4-16	0.811	0.378	1.961	1.500
FS6400-16-10-0	1	1-7/16-12	7/8-14	0.811	0.484	2.040	1.500
FS6400-16-12-0	1	1-7/16-12	1-1/16-12	0.811	0.609	2.138	1.500
FS6400-16-14-0	1	1-7/16-12	1-3/16-12	0.811	0.709	1.948	1.500
FS6400-16-16-0	1	1-7/16-12	1-5/16-12	0.811	0.811	1.978	1.500
FS6400-16-20-0	1	1-7/16-12	1-5/8-12	0.811	1.024	2.058	1.875
FS6400-20-16-0	1-1/4	1-11/16-12	1-5/16-12	1.024	0.811	2.278	1.750
FS6400-20-20-0	1-1/4	1-11/16-12	1-5/8-12	1.024	1.024	2.058	1.875
FS6400-20-24-0	1-1/4	1-11/16-12	1-7/8-12	1.024	1.260	2.128	2.125
FS6400-24-20-0	1-1/2	2-12	1-5/8-12	1.260	1.024	2.348	2.125
FS6400-24-24-O	1-1/2	2-12	1-7/8-12	1.260	1.260	2.128	2.125
FS6400-24-32-O	1-1/2	2-12	2-1/2-12	1.260	1.578	2.136	2.750
FS6400-32-32-O	2	2-1/2-12	2-1/2-12	1.772	1.578	2.313	2.750

MFS-MORB Straight Long
FS6400-L-0 Series

SAE# 520122

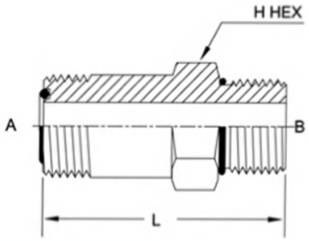

PART NO.SIZE	TUBE O.D.	A THREAD	B THREAD	A DRILL	B DRILL	I LGTH	H HEX
FS6400-L-04-04-0	1/4	9/16-18	7/16-20	0.172	0.172	2.073	0.625
FS6400-L-06-06-0	3/8	11/16-16	9/16-18	0.264	0.264	2.272	0.750
FS6400-L-06-08-0	3/8	11/16-16	3/4-16	0.264	0.378	2.611	0.875
FS6400-L-08-08-0	1/2	13/16-16	3/4-16	0.378	0.378	2.671	0.875
FS6400-L-08-12-0	1/2	13/16-16	1-1/16-12	0.378	0.609	3.588	1.250
FS6400-L-10-10-0	5/8	1-14	7/8-14	0.484	0.484	3.130	1.062
FS6400-L-12-10-0	3/4	1-3/16-12	7/8-14	0.609	0.484	3.660	1.250
FS6400-L-12-12-0	3/4	1-3/16-12	1-1/16-12	0.609	0.609	3.758	1.250
FS6400-L-16-12-0	1	1-7/16-12	1-1/16-12	0.811	0.609	4.138	1.500
FS6400-L-16-16-0	1	1-7/16-12	1-5/16-12	0.811	0.811	4.138	1.500
FS6400-L-20-20-0	1-1/4	1-11/16-12	1-5/8-12	1.024	1.024	4.758	1.875
FS6400-L-24-24-O	1-1/2	2-12	1-7/8-12	1.260	1.260	5.258	2.125

MFS-FJS Straight
FS6402 Series

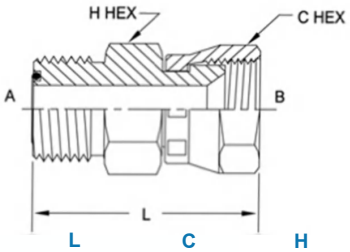

PART NO.SIZE	TUBE O.D.	A THREAD	B THREAD	A DRILL	B DRILL	L LGTH	C HEX	H HEX
FS6402-04-04-0	1/4	9/16-18	7/16-20	0.172	0.172	1.40	0.562	0.625
FS6402-06-06-0	3/8	11/16-16	9/16-18	0.264	0.297	1.58	0.688	0.750
FS6402-08-08-0	1/2	13/16-16	3/4-16	0.378	0.391	1.79	0.875	0.875
FS6402-10-10-0	5/8	1-14	7/8-14	0.484	0.484	2.08	1.000	1.062
FS6402-12-10-0	3/4	1-3/16-12	7/8-14	0.609	0.484	2.20	1.250	1.062
FS6402-12-12-O	3/4	1-3/16-12	1-1/16-12	0.609	0.609	2.30	1.250	1.250
FS6402-16-16-O	1	1-7/16-12	1-5/16-12	0.811	0.844	2.45	1.500	1.500
FS6402-20-20-0	1-1/4	1-11/16-12	1-5/8-12	1.024	1.078	2.60	2.000	1.750

MFS-MJ Straight
FS6403 Series

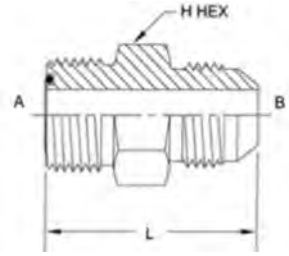

PART NO.SIZE	TUBE 0.0.	A THREAD	B THREAD	A DRILL	B DRILL	L LGTH	H HEX
FS6403-04-04	1/4	9/16-18	7/16-20	0.172	0.172	1.25	0.625
FS6403-06-06	3/8	11/16-16	9/16-18	0.264	0.297	1.34	0.750
FS6403-08-08	1/2	13/16-16	3/4-16	0.378	0.391	1.55	0.875
FS6403-10-10	5/8	1-14	7/8-14	0.484	0.484	1.83	1.062
FS6403-12-12	3/4	1-3/16-12	1-1/16-12	0.609	0.609	2.05	1.250
FS6403-16-16	1	1-7/16-12	1-5/16-12	0.811	0.844	2.16	1.500
FS6403-20-20	1-1/4	1-11/16-12	1-5/8-12	1.024	1.078	2.29	1.750
FS6403-24-24	1-1/2	2-12	1-7/8-12	1.260	1.312	2.48	2.125

O-Ring Face Seal Fittings

FORB-MFS Straight
FS6410 Series

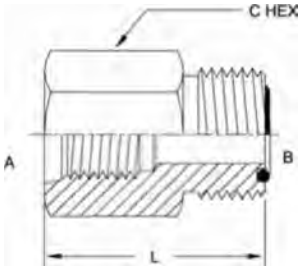

B-018

PART NO.SIZE	TUBE 0.0.	A FORB	B THREAD	B DRILL	I LOTH	C HEX
FS6410-04-04-0	1/4	7/16-20	9/16-18	0.172	1.09	0.688
FS6410-08-08-0	1/2	3/4-16	13/16-16	0.378	1.36	1.062
FS6410-16-12-O	1	1-5/16-12	1-3/16-12	0.609	1.79	1.625
FS6410-16-16-O	1	1-5/16-12	1-7/16-12	0.811	1.80	1.625
FS6410-20-20-0	1-1/4	1-5/8-12	1-11/16-12	1.024	1.86	2.125
FS6410-24-24-0	1-1/2	1-7/8-12	2-12	1.260	1.87	2.500

MFS-FFSS 90°
FS6500 Series

SAE# 520221

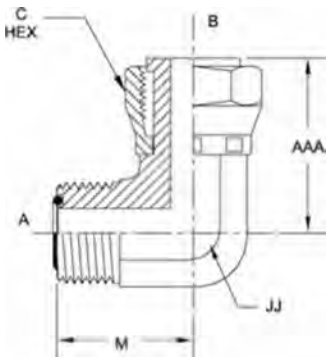

PART NO.SIZE	TUBE 0.0.	A THREAD	B THREAD	A DRILL	B DRILL	M LOTH	AAA LOTH	C HEX	JJ FLATS
FS6500-04-04-FG	1/4	9/16-18	9/16-18	0.172	0.165	0.85	1.04	0.687	0.562
FS6500-04-06-FG	1/4	9/16-18	11/16-16	0.172	0.264	0.92	1.15	0.812	0.750
FS6500-06-06-FG	3/8	11/16-16	11/16-16	0.264	0.264	0.98	1.15	0.812	0.750
FS6500-08-06-FG	1/2	13/16-16	11/16-16	0.378	0.264	1.10	1.33	0.812	0.750
FS6500-08-08-FG	1/2	13/16-16	13/16-16	0.378	0.358	1.10	1.49	0.938	0.750
FS6500-10-10-FG	5/8	1-14	1-14	0.484	0.453	1.31	1.62	1.125	1.062
FS6500-12-12-FG	3/4	1-3/16-12	1-3/16-12	0.609	0.547	1.47	1.82	1.375	1.188
FS6500-16-16-FG	1	1-7/16-12	1-7/16-12	0.811	0.783	1.64	2.10	1.625	1.438
FS6500-20-20-FG	1-1/4	1-11/16-12	1-11/16-12	1.024	1.024	1.76	2.29	1.875	1.625
FS6500-24-24-FG	1-1/2	2-12	2-12	1.260	1.260	1.92	2.41	2.250	1.875

MFS-FFSS 45°
FS6502 Series

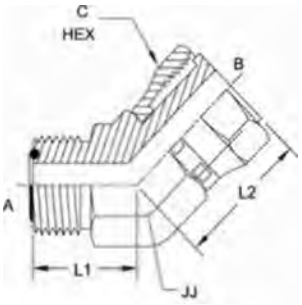

PART NO.SIZE	TUBE 0.0.	A THREAD	B THREAD	A DRILL	B DRILL	11 LGTH	12 LGTH	C HEX	JJ FLATS
FS6502-04-04-FG	1/4	9/16-18	9/16-18	0.172	0.165	0.63	0.99	0.687	0.562
FS6502-06-06-FG	3/8	11/16-16	11/16-16	0.264	0.264	0.74	1.12	0.812	0.750
FS6502-08-08-FG	1/2	13/16-16	13/16-16	0.378	0.358	0.80	1.49	0.938	0.750
FS6502-10-10-FG	5/8	1-14	1-14	0.484	0.453	0.92	1.53	1.125	1.062
FS6502-12-12-FG	3/4	1-3/16-12	1-3/16-12	0.609	0.547	1.02	1.73	1.375	1.188
FS6502-16-16-FG	1	1-7/16-12	1-7/16-12	0.811	0.783	1.18	1.87	1.625	1.438
FS6502-20-20-FG	1-1/4	1-11/16-12	1-11/16-12	1.024	1.024	1.26	1.98	1.875	1.625

FP-FFSS 90°
FS6503 Series

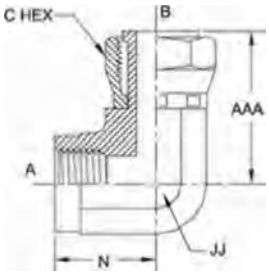

PART NO.SIZE	TUBE O.D.	A THREAD	B THREAD	B DRILL	N LGTH	AAA LGTH	C HEX	JJ FLATS
FS6503-04-04-FG	1/4	1/4-18	9/16-18	0.165	0.88	1.06	0.687	0.750
FS6503-06-06-FG	3/8	3/8-18	11/16-16	0.264	1.02	1.33	0.812	0.875

FFSS-MJ Straight
FS6504 Series

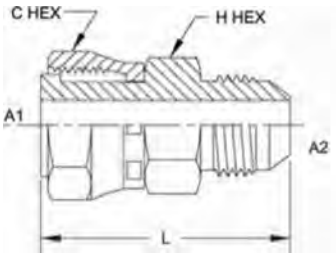

PART NO.SIZE	A1 TUBE O.D.	A2 TUBE O.D.	A1 THREAD	A2 THREAD	A1 DRILL	A2 DRILL	I LGTH	C HEX	H HEX
FS6504-04-04	1/4	1/4	9/16-18	7/16-20	0.165	0.172	1.580	0.687	0.625
FS6504-06-04	3/8	1/4	11/16-16	7/16-20	0.264	0.172	1.660	0.812	0.750
FS6504-06-06	3/8	3/8	11/16-16	9/16-18	0.264	0.297	1.666	0.812	0.750
FS6504-08-04	1/2	1/4	13/16-16	7/16-20	0.358	0.172	1.940	0.938	0.875
FS6504-08-08	1/2	1/2	13/16-16	3/4-16	0.358	0.391	2.047	0.938	0.875
FS6504-08-12	1/2	3/4	13/16-16	1-1/16-12	0.358	0.609	2.254	0.938	1.125
FS6504-10-04	5/8	1/4	1-14	7/16-20	0.453	0.172	2.040	1.125	1.062
FS6504-10-10	5/8	5/8	1-14	7/8-14	0.453	0.484	2.248	1.125	1.062
FS6504-10-12	5/8	3/4	1-14	1-1/16-12	0.453	0.609	2.354	1.125	1.125
FS6504-12-04	3/4	1/4	1-3/16-12	7/16-20	0.547	0.172	2.170	1.375	1.250
FS6504-12-12	3/4	3/4	1-3/16-12	1-1/16-12	0.547	0.609	2.484	1.375	1.250
FS6504-16-04	1	1/4	1-7/16-12	7/16-20	0.783	0.172	2.480	1.625	1.500
FS6504-16-16	1	1	1-7/16-12	1-5/16-12	0.783	0.844	2.841	1.625	1.500
FS6504-20-20	1-1/4	1-1/4	1-11/16-12	1-5/8-12	1.024	1.078	2.888	1.875	1.875

MP-FFSS Straight
FS6505 Series

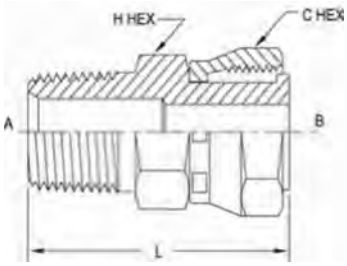

PART NO.SIZE	TUBE O.D.	A THREAD	B THREAD	A HOLE	B HOLE	L LGTH	C HEX	H HEX
FS6505-04-06	3/8	1/4-18	11/16-16	0.281	0.264	1.670	0.812	0.750
FS6505-08-08	1/2	1/2-14	13/16-16	0.531	0.358	2.140	0.938	0.875
FS6505-12-12	3/4	3/4-14	1-3/16-12	0.719	0.547	2.370	1.375	1.250

O-Ring Face Seal Fittings

FFSS-MORB Straight
FS6540 Series

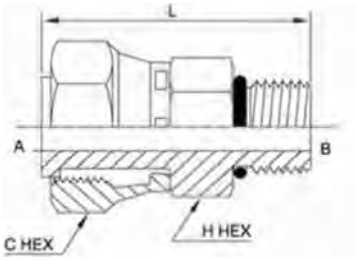

B-020

PART N0.SIZE	TUBE 0.0.	A THREAD	B MORB	A DRILL	B DRILL	L LGTH	C HEX	H HEX
FS6540-04-04-0	1/4	9/16-18	7/16-20	0.165	0.172	1.463	0.687	0.625
FS6540-06-06-0	3/8	11/16-16	9/16-18	0.264	0.264	1.582	0.812	0.750
FS6540-08-06-0	1/2	13/16-16	9/16-18	0.358	0.264	1.862	0.938	0.875
FS6540-08-08-0	1/2	13/16-16	3/4-16	0.358	0.378	1.941	0.938	0.875
FS6540-10-10-0	5/8	1-14	7/8-14	0.453	0.484	2.120	1.125	1.062
FS6540-10-12-O	5/8	1-14	1-1/16-12	0.453	0.609	2.218	1.125	1.250
FS6540-12-12-O	3/4	1-3/16-12	1-1/16-12	0.547	0.609	2.348	1.375	1.250
FS6540-16-16-O	1	1-7/16-12	1-5/16-12	0.783	0.811	2.658	1.625	1.500
FS6540-20-20-0	1-1/4	1-11/16-12	1-5/8-12	1.024	1.024	2.658	1.875	1.875
FS6540-24-24-O	1-1/2	2-12	1-7/8-12	1.260	1.260	2.658	2.250	2.125

MFS-FFSS-FORB Straight
FS6564 Series

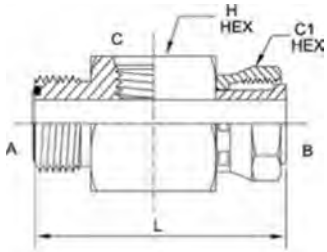

PART NO.SIZE	TUBE O.D.	A THREAD	B THREAD	C SAEORB	A DRILL	B DRILL	L LGTH	CI HEX	H HEX
FS6564-04-04-04	1/4	9/16-18	9/16-18	7/16-20	0.172	0.165	1.83	0.687	1.062
FS6564-06-06-04	3/8	11/16-16	11/16-16	7/16-20	0.264	0.264	1.95	0.812	1.062
FS6564-08-08-04	1/2	13/16-16	13/16-16	7/16-20	0.378	0.358	2.18	0.938	1.062
FS6564-10-10-04	5/8	1-14	1-14	7/16-20	0.484	0.453	2.40	1.125	1.125
FS6564-12-12-04	3/4	1-3/16-12	1-3/16-12	7/16-20	0.609	0.547	2.59	1.375	1.250
FS6564-16-16-04	1	1-7/16-12	1-7/16-12	7/16-20	0.811	0.783	2.85	1.625	1.500
FS6564-20-20-04	1-1/4	1-11/16-12	1-11/16-12	7/16-20	1.024	1.024	3.07	1.875	1.750
FS6564-24-24-04	1-1/2	2-12	2-12	7/16-20	1.260	1.260	3.22	2.250	2.125

FFSS-FFSS Straight
FS6565 Series

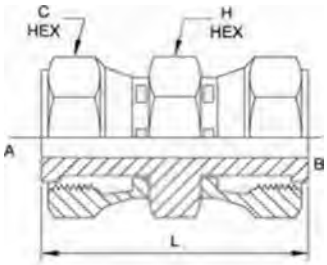

PART NO.SIZE	TUBE O.D.	A THREAD	B THREAD	A DRILL	B DRILL	L LGTH	C HEX	H HEX
FS6565-04-04	1/4	9/16-18	9/16-18	0.165	0.165	1.59	0.687	0.625
FS6565-06-06	3/8	11/16-16	11/16-16	0.264	0.264	1.77	0.812	0.750
FS6565-08-08	1/2	13/16-16	13/16-16	0.358	0.358	2.12	0.938	0.875
FS6565-10-10	5/8	1-14	1-14	0.453	0.453	2.42	1.125	1.062
FS6565-12-12	3/4	1-3/16-12	1-3/16-12	0.547	0.547	2.74	1.375	1.250
FS6565-16-16	1	1-7/16-12	1-7/16-12	0.783	0.783	2.95	1.625	1.500

MFS-MFS-FFSS Branch Tee
FS6600 Series

SAE# 520433

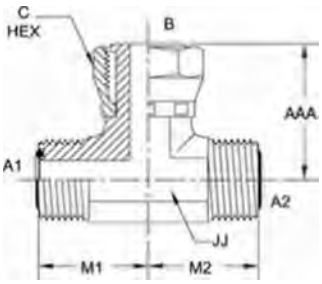

PART NO.SIZE	TUBE O.D.	A1 THREAD	A2 THREAD	B THREAD	A1 DRILL	A2 DRILL	B DRILL	MI LDTH	M2 LDTH	AAA LBTH	C HEX	JJ FLATS
FS6600-04-04-04-FG	1/4	9/16-18	9/16-18	9/16-18	0.172	0.172	0.165	0.85	0.85	1.04	0.687	0.562
FS6600-04-04-06-FG	1/4	9/16-18	9/16-18	11/16-16	0.172	0.172	0.264	0.92	0.92	1.15	0.812	0.750
FS6600-06-06-06-FG	3/8	11/16-16	11/16-16	11/16-16	0.264	0.264	0.264	0.98	0.98	1.15	0.812	0.750
FS6600-08-08-08-FG	1/2	13/16-16	13/16-16	13/16-16	0.378	0.378	0.358	1.10	1.10	1.49	0.938	0.750
FS6600-10-10-10-FG	5/8	1-14	1-14	1-14	0.484	0.484	0.453	1.31	1.31	1.62	1.125	1.062
FS6600-12-12-12-FG	3/4	1-3/16-12	1-3/16-12	1-3/16-12	0.609	0.609	0.547	1.47	1.47	1.82	1.375	1.188
FS6600-16-16-16-FG	1	1-7/16-12	1-7/16-12	1-7/16-12	0.811	0.811	0.783	1.64	1.64	2.10	1.625	1.438
FS6600-20-20-20-FG	1-1/4	1-11/16-12	1-11/16-12	1-11/16-12	1.024	1.024	1.024	1.76	1.76	2.29	1.875	1.625
FS6600-24-24-24-FG	1-1/2	2-12	2-12	2-12	1.260	1.260	1.260	1.92	1.92	2.41	2.250	1.875

MFS-FFSS-MFS Run Tee
FS6602 Series

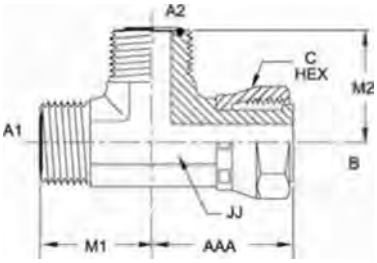

PART NO.SIZE	TUBE O.D.	A1 THREAD	B THREAD	A2 THREAD	A1 DRILL	B DRILL	A2 DRILL	MI LDTH	AAA LGTH	M2 LGTH	C HEX	JJ FLATS
FS6602-04-04-04-FG	1/4	9/16-18	9/16-18	9/16-18	0.172	0.165	0.172	0.85	1.04	0.85	0.687	0.562
FS6602-06-06-04-FG	3/8	11/16-16	11/16-16	9/16-18	0.264	0.264	0.172	0.98	1.15	0.92	0.812	0.750
FS6602-06-06-06-FG	3/8	11/16-16	11/16-16	11/16-16	0.264	0.264	0.264	0.98	1.15	0.98	0.812	0.750
FS6602-06-08-06-FG	1/2	11/16-16	13/16-16	11/16-16	0.264	0.358	0.264	1.04	1.49	1.04	0.938	0.750
FS6602-06-08-08-FG	1/2	11/16-16	13/16-16	13/16-16	0.264	0.358	0.378	1.04	1.49	1.10	0.938	0.750
FS6602-08-08-06-FG	1/2	13/16-16	13/16-16	11/16-16	0.378	0.358	0.264	1.10	1.49	1.04	0.938	0.750
FS6602-08-08-08-FG	1/2	13/16-16	13/16-16	13/16-16	0.378	0.358	0.378	1.10	1.49	1.10	0.938	0.750
FS6602-10-10-10-FG	5/8	1-14	1-14	1-14	0.484	0.453	0.484	1.31	1.62	1.31	1.125	1.062
FS6602-12-12-12-FG	3/4	1-3/16-12	1-3/16-12	1-3/16-12	0.609	0.547	0.609	1.47	1.82	1.47	1.375	1.188
FS6602-16-16-16-FG	1	1-7/16-12	1-7/16-12	1-7/16-12	0.811	0.783	0.811	1.64	2.10	1.64	1.625	1.438
FS6602-20-20-20-FG	1-1/4	1-11/16-12	1-11/16-12	1-11/16-12	1.024	1.024	1.024	1.76	2.29	1.76	1.875	1.625
FS6602-24-24-24-FG	1-1/2	2-12	2-12	2-12	1.260	1.260	1.260	1.92	2.41	1.92	2.250	1.875

O-Ring Face Seal Fittings

MFS-MAORB 90°
FS6801-NWO Series

SAE# 520220

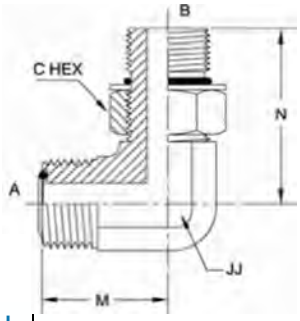

B-022

PART NO.SIZE	TUBE O.D.	A THREAD	B THREAD	A DRILL	B DRILL	M LGTH	N LGTH	C HEX	JJ FLATS
FS6801 -04-04-NWO-FG	1/4	9/16-18	7/16-20	0.172	0.172	0.85	1.29	0.625	0.562
FS6801 -04-05-NWO-FG	1/4	9/16-18	1/2-20	0.172	0.236	0.85	1.29	0.687	0.562
FS6801-04-06-NWO-FG	1/4	9/16-18	9/16-18	0.172	0.264	0.92	1.45	0.750	0.750
FS6801 -04-08-NWO-FG	1/4	9/16-18	3/4-16	0.172	0.378	0.97	1.60	0.938	0.750
FS6801 -06-04-NWO-FG	3/8	11/16-16	7/16-20	0.264	0.172	0.98	1.37	0.625	0.750
FS6801-06-05-NWO-FG	3/8	11/16-16	1/2-20	0.264	0.236	0.98	1.37	0.687	0.750
FS6801 -06-06-NWO-FG	3/8	11/16-16	9/16-18	0.264	0.264	0.98	1.45	0.750	0.750
FS6801 -06-08-NWO-FG	3/8	11/16-16	3/4-16	0.264	0.378	0.98	1.60	0.938	0.750
FS6801 -06-10-N WO-FG	3/8	11/16-16	7/8-14	0.264	0.484	1.15	1.97	1.062	1.062
FS6801 -06-12-NWO-FG	3/8	11/16-16	1-1/16-12	0.264	0.609	1.25	2.17	1.375	1.188
FS6801 -08-04-NWO-FG	1/2	13/16-16	7/16-20	0.378	0.172	1.10	1.36	0.625	0.750
FS6801 -08-06-NWO-FG	1/2	13/16-16	9/16-18	0.378	0.295	1.10	1.45	0.750	0.750
FS6801 -08-08-NWO-FG	1/2	13/16-16	3/4-16	0.378	0.378	1.10	1.60	0.938	0.750
FS6801 -08-10-N WO-FG	1/2	13/16-16	7/8-14	0.378	0.484	1.21	1.97	1.062	1.062
FS6801-08-12-NWO-FG	1/2	13/16-16	1-1/16-12	0.378	0.609	1.32	2.17	1.375	1.188
FS6801-10-08-N WO-FG	5/8	1-14	3/4-16	0.484	0.390	1.31	1.80	0.938	1.062
FS6801-10-10-N WO-FG	5/8	1-14	7/8-14	0.484	0.484	1.31	1.97	1.062	1.062
FS6801-10-12-NWO-FG	5/8	1-14	1-1/16-12	0.484	0.609	1.41	2.17	1.375	1.188
FS6801-12-08-N WO-FG	3/4	1-3/16-12	3/4-16	0.609	0.390	1.47	1.84	0.938	1.188
FS6801-12-10-N WO-FG	3/4	1-3/16-12	7/8-14	0.609	0.484	1.47	2.01	1.062	1.188
FS6801 -12-12-NWO-FG	3/4	1-3/16-12	1-1/16-12	0.609	0.609	1.47	2.17	1.375	1.188
FS6801 -12-16-N WO-FG	3/4	1-3/16-12	1-5/16-12	0.609	0.811	1.62	2.35	1.625	1.438
FS6801 -12-20-N WO-FG	3/4	1-3/16-12	1-5/8-12	0.609	1.024	1.74	2.45	1.875	1.625
FS6801 -16-12-NWO-FG	1	1-7/16-12	1-1/16-12	0.811	0.609	1.64	2.32	1.375	1.438
FS6801-16-16-N WO-FG	1	1-7/16-12	1-5/16-12	0.811	0.811	1.64	2.35	1.625	1.438
FS6801-16-20-N WO-FG	1	1-7/16-12	1-5/8-12	0.811	1.024	1.76	2.45	1.875	1.625
FS6801 -16-24-N WO-FG	1	1-7/16-12	1-7/8-12	0.811	1.260	1.92	2.59	2.125	1.875
FS6801-20-12-NWO-FG	1-1/4	1-11/16-12	1-1/16-12	1.024	0.609	1.76	2.42	1.375	1.625
FS6801 -20-16-N WO-FG	1-1/4	1-11/16-12	1-5/16-12	1.024	0.843	1.76	2.45	1.625	1.625
FS6801 -20-20-NWO-FG	1-1/4	1-11/16-12	1-5/8-12	1.024	1.024	1.76	2.45	1.875	1.625
FS6801 -20-24-NWO-FG	1-1/4	1-11/16-12	1-7/8-12	1.024	1.260	1.92	2.59	2.125	1.875
FS6801 -24-20-NWO-FG	1-1/2	2-12	1-5/8-12	1.260	1.079	1.92	2.59	1.875	1.875
FS6801-24-24-N WO-FG	1-1/2	2-12	1-7/8-12	1.260	1.260	1.92	2.59	2.125	1.875

MFS-MAORB 90° Long
FS6801-L-NWO Series

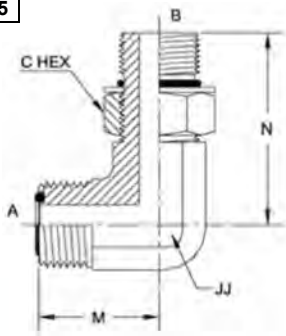

PART NO.SIZE	TUBE O.D.	A THREAD	B THREAD	A DRILL	B DRILL	M LGTH	N LGTH	C HEX	JJ FLATS
FS6801-L-04-04-NWO-FG	1/4	9/16-18	7/16-20	0.172	0.172	0.85	2.23	0.625	0.562
FS6801-L-06-06-N WO-FG	3/8	11/16-16	9/16-18	0.264	0.264	0.98	2.61	0.750	0.750
FS6801-L-08-08-NWO-FG	1/2	13/16-16	3/4-16	0.378	0.378	1.10	2.95	0.938	0.750
FS6801 -L-10-10-N WO-FG	5/8	1-14	7/8-14	0.484	0.484	1.31	3.51	1.062	1.062
FS6801-L-12-12-NWO-FG	3/4	1-3/16-12	1-1/16-12	0.609	0.609	1.47	3.97	1.375	1.188
FS6801 -L-16-16-N WO-FG	1	1-7/16-12	1-5/16-12	0.811	0.811	1.64	4.51	1.625	1.438

MFS-MAORB 90°X-Long
FS6801-LL-NWO Series

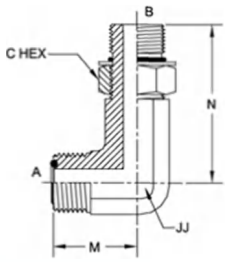

PART NO.SIZE	TUBE O.D.	A THREAD	B THREAD	A DRILL	8 DRILL	M LGTH	N LGTH	C HEX	JJ FLATS
FS6801-LL-08-08-NWO-FG	1/2	13/16-16	3/4-16	0.378	0.390	1.10	3.50	0.938	0.750
FS6801 -LL-12-12-NWO-FG	3/4	1-3/16-12	1-1/16-12	0.609	0.609	1.47		1.375	1.188
FS6801 -LL-16-16-NWO-FG	1	1-7/16-12	1-5/16-12	0.811	0.843	1.64	5.00	1.625	1.438

MFS-MAORB 45°
FS6802-NWO Series

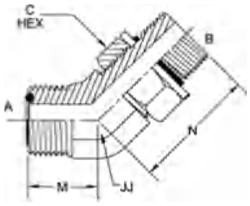

SAE# 520320

PART NO.SIZE	TUBE O.D.	A THREAD	B THREAD	A DRILL	B DRILL	M LGTH	N LGTH	C HEX	JJ FLATS
FS6802-04-04-NWO-FG	1/4	9/16-18	7/16-20	0.172	0.172	0.63	1.18	0.625	0.562
FS6802-04-06-NWO-FG	1/4	9/16-18	9/16-18	0.172	0.264	0.68	1.30	0.750	0.750
FS6802-04-08-NWO-FG	1/4	9/16-18	3/4-16	0.172	0.378	0.67	1.43	0.938	0.750
FS6802-06-04-NWO-FG	3/8	11/16-16	7/16-20	0.264	0.172	0.74	1.22	0.625	0.750
FS6802-06-06-NWO-FG	3/8	11/16-16	9/16-18	0.264	0.264	0.74	1.30	0.750	0.750
FS6802-06-08-NWO-FG	3/8	11/16-16	3/4-16	0.264	0.378	0.74	1.43	0.938	0.750
FS6802-06-10-NWO-FG	3/8	11/16-16	7/8-14	0.264	0.484	0.76	1.76	1.062	1.062
FS6802-08-06-NWO-FG	1/2	13/16-16	9/16-18	0.378	0.295	0.80	1.30	0.750	0.750
FS6802-08-08-NWO-FG	1/2	13/16-16	3/4-16	0.378	0.378	0.80	1.43	0.938	0.750
FS6802-08-10-NWO-FG	1/2	13/16-16	7/8-14	0.378	0.484	0.82	1.76	1.062	1.062
FS6802-08-12-N WO-FG	1/2	13/16-16	1-1/16-12	0.378	0.609	0.87	1.97	1.375	1.188
FS6802-10-08-NWO-FG	5/8	1-14	3/4-16	0.484	0.390	0.92	1.59	0.938	1.062
FS6802-10-10-NWO-FG	5/8	1-14	7/8-14	0.484	0.484	0.92	1.76	1.062	1.062
FS6802-10-12-N WO-FG	5/8	1-14	1-1/16-12	0.484	0.609	0.96	1.97	1.375	1.188
FS6802-12-08-NWO-FG	3/4	1-3/16-12	3/4-16	0.609	0.390	1.02	1.64	0.938	1.188
FS6802-12-10-N WO-FG	3/4	1-3/16-12	7/8-14	0.609	0.484	1.02	1.81	1.062	1.188
FS6802-12-12-N WO-FG	3/4	1-3/16-12	1-1/16-12	0.609	0.609	1.02	1.97	1.375	1.188
FS6802-12-16-NWO-FG	3/4	1-3/16-12	1-5/16-12	0.609	0.811	1.16	2.06	1.625	1.438
FS6802-16-12-N WO-FG	1	1-7/16-12	1-1/16-12	0.811	0.609	1.18	2.03	1.375	1.438
FS6802-16-16-NWO-FG	1	1-7/16-12	1-5/16-12	0.811	0.811	1.18	2.06	1.625	1.438
FS6802-16-20-N WO-FG	1	1-7/16-12	1-5/8-12	0.811	1.024	1.26	2.11	1.875	1.625
FS6802-20-16-NWO-FG	1-1/4	1-11/16-12	1-5/16-12	1.024	0.843	1.26	2.11	1.625	1.625
FS6802-20-20-N WO-FG	1-1/4	1-11/16-12	1-5/8-12	1.024	1.024	1.26	2.11	1.875	1.625
FS6802-24-24-N WO-FG	1-1/2	2-12	1-7/8-12	1.260	1.260	1.45	2.11	2.125	1.875

MFS-MFS-MAORB Tee
FS6803-NWO Series

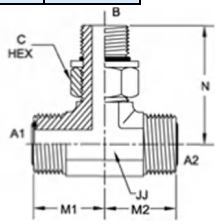

SAE# 520429

PART NO.SIZE	TUBE O.D.	A1 THREAD	A2 THREAD	B THREAD	A1 DRILL	A2 DRILL	8 DRILL	MI LGTH	M2 LGTH	N LGTH	C HEX	JJ FLATS
FS6803-04-04-04-NWO-FG	1/4	9/16-18	9/16-18	7/16-20	0.172	0.172	0.172	0.85	0.85	1.29	0.625	0.562
FS6803-06-06-04-NWO-FG	3/8	11/16-16	11/16-16	7/16-20	0.264	0.264	0.172	0.98	0.98	1.37	0.750	0.750
FS6803-06-06-06-NWO-FG	3/8	11/16-16	11/16-16	9/16-18	0.264	0.264	0.264	0.98	0.98	1.45	0.750	0.750
FS6803-06-06-08-N WO-FG	3/8	11/16-16	11/16-16	3/4-16	0.264	0.264	0.378	1.04	1.04	1.60	0.750	0.750
FS6803-08-08-08-N WO-FG	1/2	13/16-16	13/16-16	3/4-16	0.378	0.378	0.378	1.10	1.10	1.60	0.938	0.750
FS6803-10-10-10-N WO-FG	5/8	1-14	1-14	7/8-14	0.484	0.484	0.484	1.31	1.31	1.97	1.062	1.062
FS6803-12-12-12-NWO-FG	3/4	1-3/16-12	1-3/16-12	1-1/16-12	0.609	0.609	0.609	1.47	1.47	2.17	1.375	1.188
FS6803-16-16-16-NWO-FG	1	1-7/16-12	1-7/16-12	1-5/16-12	0.811	0.811	0.811	1.64	1.64	2.35	1.625	1.438
FS6803-20-20-20-N WO-FG	1-1/4	1-11/16-12	1-11/16-12	1-5/8-12	1.024	1.024	1.024	1.76	1.76	2.45	1.875	1.625
FS6803-24-24-24-N WO-FG	1-1/2	2-12	2-12	1-7/8-12	1.260	1.260	1.260	1.92	1.92	2.59	2.125	1.875

O-Ring Face Seal Fittings

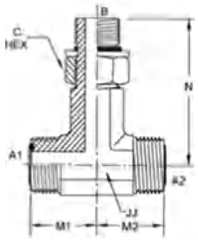

MFS-MFS-MAORB Tee
FS6803-L-NWO Series

PART NO.SIZE	TUBE O.D.	A1 THREAO	A2 THREAD	B THREAD	A1 DRILL	A2 DRILL	B DRILL	MI LGTH	MZ LGTH	N LGTH	C HEX	JJ FLATS
FS6803-L-12-12-12-NWO-FG	3/4	1-3/16-12	1-3/16-12	1-1/16-12	0.609	0.609	0.609	1.470	1.470	2.670	1.375	1.188

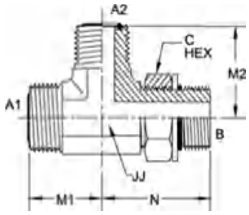

MFS-MFS-MAORB Tee
FS6804-NWO Series

SAE# 520428

PART NO.SIZE	TUBE O.D.	A1 THREAD	B THREAO	A2 THREAD	A1 DRILL	B DRILL	A2 DRILL	MI LGTH	N LGTH	MZ LGTH	C HEX	JJ FLATS
FS6804-04-04-04-NWO-FG	1/4	9/16-18	7/16-20	9/16-18	0.172	0.172	0.172	0.85	1.29	0.85	0.625	0.562
FS6804-04-06-04-NWO-FG	1/4	9/16-18	9/16-18	9/16-18	0.172	0.264	0.172	0.92	1.45	0.92	0.750	0.750
FS6804-06-04-06-NWO-FG	3/8	11/16-16	7/16-20	11/16-16	0.264	0.172	0.264	0.98	1.37	0.98	0.625	0.750
FS6804-06-06-06-NWO-FG	3/8	11/16-16	9/16-18	11/16-16	0.264	0.264	0.264	0.98	1.45	0.98	0.750	0.750
FS6804-06-08-06-NWO-FG	3/8	11/16-16	3/4-16	11/16-16	0.264	0.378	0.264	1.04	1.60	1.04	0.938	0.750
FS6804-08-06-08-NWO-FG	1/2	13/16-16	9/16-18	13/16-16	0.378	0.295	0.378	1.10	1.45	1.10	0.750	0.750
FS6804-08-08-04-NWO-FG	1/2	13/16-16	3/4-16	9/16-18	0.378	0.378	0.172	1.10	1.60	0.97	0.938	0.750
FS6804-08-08-08-NWO-FG	1/2	13/16-16	3/4-16	13/16-16	0.378	0.378	0.378	1.10	1.60	1.10	0.938	0.750
FS6804-08-10-08-NWO-FG	1/2	13/16-16	7/8-14	13/16-16	0.378	0.484	0.378	1.21	1.97	1.21	1.062	1.062
FS6804-08-12-04-NWO-FG	1/2	13/16-16	1-1/16-12	9/16-18	0.378	0.609	0.172	1.32	2.17	1.19	1.375	1.188
FS6804-08-12-08-NWO-FG	1/2	13/16-16	1-1/16-12	13/16-16	0.378	0.609	0.378	1.32	2.17	1.32	1.375	1.188
FS6804-10-10-06-NWO-FG	5/8	1-14	7/8-14	11/16-16	0.484	0.484	0.264	1.31	1.97	1.15	1.062	1.062
FS6804-10-10-10-NWO-FG	5/8	1-14	7/8-14	1-14	0.484	0.484	0.484	1.31	1.97	1.31	1.062	1.062
FS6804-10-12-10-NWO-FG	5/8	1-14	1-1/16-12	1-14	0.484	0.609	0.484	1.41	2.17	1.41	1.375	1.188
FS6804-12-08-08-NWO-FG	3/4	1-3/16-12	3/4-16	13/16-16	0.609	0.378	0.378	1.47	1.84	1.32	0.938	1.188
FS6804-12-12-08-NWO-FG	3/4	1-3/16-12	1-1/16-12	13/16-16	0.609	0.609	0.378	1.47	2.17	1.32	1.375	1.188
FS6804-12-12-12-NWO-FG	3/4	1-3/16-12	1-1/16-12	1-3/16-12	0.609	0.609	0.609	1.47	2.17	1.47	1.375	1.188
FS6804-12-12-16-NWO-FG	3/4	1-3/16-12	1-1/16-12	1-7/16-12	0.609	0.609	0.811	1.62	2.32	1.64	1.375	1.438
FS6804-12-16-12-NWO-FG	3/4	1-3/16-12	1-5/16-12	1-3/16-12	0.609	0.811	0.609	1.62	2.35	1.62	1.625	1.438
FS6804-16-12-12-NWO-FG	1	1-7/16-12	1-1/16-12	1-3/16-12	0.811	0.609	0.609	1.64	2.32	1.62	1.375	1.438
FS6804-16-16-16-NWO-FG	1	1-7/16-12	1-5/16-12	1-7/16-12	0.811	0.811	0.811	1.64	2.35	1.64	1.625	1.438
FS6804-16-20-16-NWO-FG	1	1-7/16-12	1-5/8-12	1-7/16-12	0.811	1.024	0.811	1.76	2.45	1.76	1.875	1.625
FS6804-16-24-16-NWO-FG	1	1-7/16-12	1-7/8-12	1-7/16-12	0.811	1.260	0.811	1.92	2.59	1.92	2.125	1.875
FS6804-20-20-20-NWO-FG	1-1/4	1-11/16-12	1-5/8-12	1-11/16-12	1.024	1.024	1.024	1.76	2.45	1.76	1.875	1.625
FS6804-24-24-24-NWO-FG	1-1/2	2-12	1-7/8-12	2-12	1.260	1.260	1.260	1.92	2.59	1.92	2.125	1.875

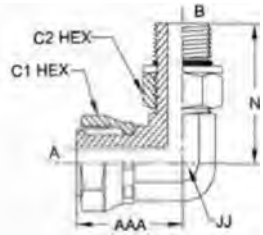

FFSS-MAORB 90°
FS6809-NWO Series

SAE# 520281

PART NO.SIZE	TUBE O.D.	A THREAD	B THREAD	A HOLE	B HOLE	AAA LGTH	N LGTH	CI HEX	C2 HEX	JJ FLATS
FS6809-04-04-NWO-FG	1/4	9/16-18	7/16-20	0.165	0.172	1.04	1.29	0.687	0.625	0.562
FS6809-06-06-NWO-FG	3/8	11/16-16	9/16-18	0.264	0.264	1.15	1.45	0.812	0.750	0.750
FS6809-08-08-NWO-FG	1/2	13/16-16	3/4-16	0.358	0.378	1.49	1.60	0.938	0.938	0.750
FS6809-10-10-NWO-FG	5/8	1-14	7/8-14	0.453	0.484	1.62	1.97	1.125	1.062	1.062
FS6809-12-12-N WO-FG	3/4	1-3/16-12	1-1/16-12	0.547	0.609	1.82	2.17	1.375	1.375	1.188
FS6809-16-16-NWO-FG	1	1-7/16-12	1-5/16-12	0.783	0.811	2.10	2.35	1.625	1.625	1.438
FS6809-20-20-NWO-FG	1-1/4	1-11/16-12	1-5/8-12	1.024	1.024	2.29	2.45	1.875	1.875	1.625
FS6809-24-24-N WO-FG	1-1/2	2-12	1-7/8-12	1.260	1.260	2.41	2.59	2.250	2.125	1.875

MFS-MAORB-FP Tee
FS6845-NWO Series

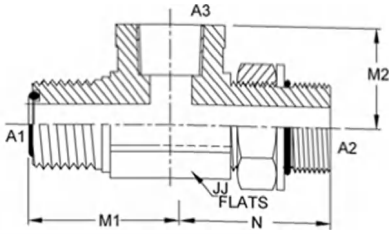

PART NO.SIZE	TUBE O.D.	A1 THREAD	A2 THREAD	A3 NPTF	A1 DRILL	A2 DRILL	MI LGTH	N LGTH	M2 LGTH	C HEX	JJ FLATS
FS6845-06-06-04-NWO-FG	3/8	11/16-16	9/16-18	1/4-18	0.264	0.264	0.98	1.45	0.83	0.750	0.750

M FS-M FS-M AORB-M FS
FS6850-NWO Series

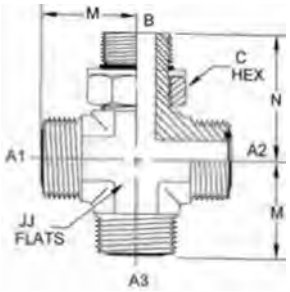

PART NO.SIZE	TUBE O.D.	A1 THREAD	A2 THREAD	B THREAD	A3 THREAD	A1 DRILL	A2 DRILL	B DRILL	A3 DRILL	M LGTH	N LGTH	C HEX	JJ FLATS
FS6845-06-06-04-06-NWO-FG	3/8	11/16-16	11/16-16	7/16-20	11/16-16	0.264	0.264	0.172	0.264	0.98	1.37	0.625	0.750

MFS-MAORB-MFS-MFS Cross
FS6859-NWO Series

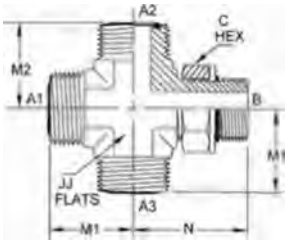

PART NO.SIZE	TUBE O.D.	A1 THREAD	B THREAD	A2 THREAD	A3 THREAD	A1 DRILL	B DRILL	A2 DRILL	A3 DRILL	MI LGTH	M2 LGTH	N LGTH	C HEX	JJ FLATS
FS6859-06-06-04-06-NWQ-FG	3/8	11/16-16	9/16-18	9/16-18	11/16-16	0.264	0.264	0.172	0.264	0.98	0.92	1.45	0.750	0.750

MFS-MBSPP Straight
FS7002 Series

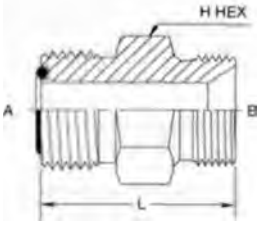

PART NO.SIZE	TUBE O.D.	A THREAD	B BSPP	A DRILL	B DRILL	L LGTH	H HEX
FS7002-04-04	1/4	9/16-18	1/4-19	4.37	4.40	30.0	19.0
FS7002-06-06	3/8	11/16-16	3/8-19	6.71	7.50	33.0	22.0
FS7002-06-08	3/8	11/16-16	1/2-14	6.71	11.10	37.5	27.0
FS7002-08-04	1/2	13/16-16	1/4-19	9.60	4.70	36.4	22.0
FS7002-08-08	1/2	13/16-16	1/2-14	9.60	11.10	39.0	27.0
FS7002-08-12	1/2	13/16-16	3/4-14	9.60	16.70	45.0	32.0
FS7002-10-12	5/8	1-14	3/4-14	12.29	16.70	47.7	32.0
FS7002-12-08	3/4	1-3/16-12	1/2-14	15.47	11.10	48.5	32.0
FS7002-12-12	3/4	1-3/16-12	3/4-14	15.47	16.70	50.0	32.0
FS7002-16-12	1	1-7/16-12	3/4-14	20.60	16.70	50.3	38.0
FS7002-16-20	1	1-7/16-12	1-1/4-11	20.60	28.60	53.8	50.0
FS7002-20-16	1-1/4	1-11/16-12	1-11	26.00	22.20	53.8	47.0
FS7002-20-20	1-1/4	1-11/16-12	1-1/4-11	26.00	28.60	53.8	50.0
FS7002-24-24	1-1/2	2-12	1-1/2-11	32.00	33.30	58.0	55.0

O-Ring Face Seal Fittings

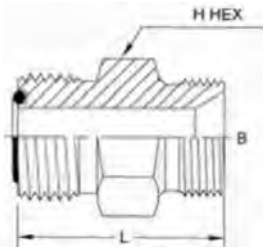

B-026

MFS-MM Straight
FS7005 Series

PART NO.SIZE	TUBE O.D.	A THREAD	B MM	A DRILL	B DRILL	L LGTH	H HEX
FS7005-04-10	1/4	9/16-18	M10X1.0	4.37	4.40	31.5	17.0
FS7005-08-18	1/2	13/16-16	M18X1.5	9.60	11.0	35.6	22.0
FS7005-16-33	1	1-7/16-12	M33X2	20.6	23.0	49.5	38.0

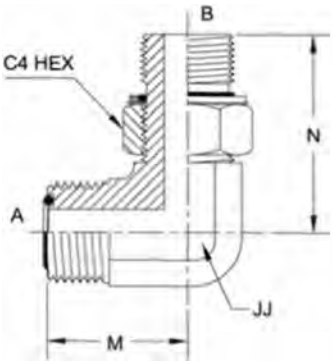

MFS-MBSPP 90° Elbow
FS7202-NWO Series

PART NO.SIZE	TUBE O.D.	A THREAD	B THREAD	A DRILL	B DRILL	M LGTH	N LGTH	C4 HEX	JJ HEX
FS7202-04-02-NWO-FG	1/4	9/16-18	1/8-28	4.4	4.4	21.5	30.0	14	14
FS7202-04-04-NWO-FG	1/4	9/16-18	1/4-19	4.4	7.5	23.5	36.0	19	19
FS7202-04-06-NWO-FG	1/4	9/16-18	3/8-19	4.4	9.9	24.7	38.0	22	19
FS7202-06-04-NWO-FG	3/8	11/16-16	1/4-19	6.7	7.5	25.0	36.0	19	19
FS7202-06-06-NWO-FG	3/8	11/16-16	3/8-19	6.7	9.9	26.5	38.0	22	19
FS7202-08-04-NWO-FG	1/2	13/16-16	1/4-19	9.6	7.5	28.0	36.0	19	19
FS7202-08-06-N WO-FG	1/2	13/16-16	3/8-19	9.6	9.9	28.0	38.0	22	19
FS7202-08-08-NWO-FG	1/2	13/16-16	1/2-14	9.6	12.3	30.8	48.5	27	27
FS7202-08-12-N WO-FG	1/2	13/16-16	3/4-14	9.6	15.5	33.5	51.5	36	30
FS7202-10-06-N WO-FG	5/8	1-14	3/8-19	12.3	9.9	33.3	41.9	22	24
FS7202-10-08-N WO-FG	5/8	1-14	1/2-14	12.3	12.3	33.3	48.5	27	27
FS7202-10-12-N WO-FG	5/8	1-14	3/4-14	12.3	15.5	35.8	51.5	36	30
FS7202-10-16-N WO-FG	5/8	1-14	1-11	12.3	21.5	39.7	58.5	41	36
FS7202-12-08-N WO-FG	3/4	1-3/16-12	1/2-14	15.5	12.3	37.3	48.5	27	27
FS7202-12-12-N WO-FG	3/4	1-3/16-12	3/4-14	15.5	15.5	37.3	51.5	36	30
FS7202-12-16-N WO-FG	3/4	1-3/16-12	1-11	15.5	21.5	41.2	58.5	41	36
FS7202-16-12-N WO-FG	1	1-7/16-12	3/4-14	20.6	15.5	41.7	55.2	36	36
FS7202-16-16-NWO-FG	1	1-7/16-12	1-11	20.6	21.5	41.7	58.5	41	36
FS7202-16-20-NWO-FG	1	1-7/16-12	1-1/4-11	20.6	27.5	44.7	62.2	50	41
FS7202-20-16-N WO-FG	1-1/4	1-11/16-12	1-11	26.0	21.5	44.7	58.5	41	41
FS7202-20-20-NWO-FG	1-1/4	1-11/16-12	1-1/4-11	26.0	27.5	44.7	62.2	50	41
FS7202-20-24-N WO-FG	1-1/4	1-11/16-12	1-1/2-11	26.0	33	48.8	65.8	55	50
FS7202-24-24-N WO-FG	1-1/2	2-12	1-1/2-11	32.0	33	48.8	65.8	55	50

MFS-MMAORB 90° Elbow
FS7205-NWO Series

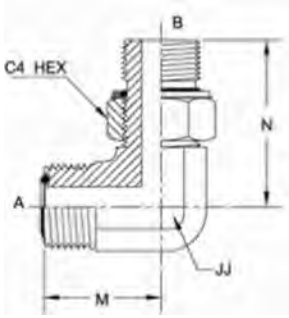

PART NO.SIZE	TUBE O.D.	A THREAD	B THREAD	A DRILL	B DRILL	M LGTH	N LGTH	C4 HEX	JJ FLATS
FS7205-04-12-N WO-FG	1/4	9/16-18	M12 x 1.5	4.5	4.0	21.5	33.0	17	14
FS7205-04-14-NWO-FG	1/4	9/16-18	M14 x 1.5	4.5	6.0	23.5	35.5	19	17
FS7205-06-10-NWO-FG	3/8	11/16-16	M10 x 1	6.5	3.0	25.0	32.0	14	17
FS7205-06-12-NWO-FG	3/8	11/16-16	M12 x 1.5	6.5	4.0	25.0	35.5	17	17
FS7205-06-14-NWO-FG	3/8	11/16-16	M14 x 1.5	6.5	6.0	25.0	35.5	19	17
FS7205-06-16-NWO-FG	3/8	11/16-16	M16 x 1.5	6.5	7.0	25.0	37.5	22	17
FS7205-06-18-N WO-FG	3/8	11/16-16	M18x 1.5	6.5	9.0	25.0	41.0	24	19
FS7205-08-14-NWO-FG	1/2	13/16-16	M14 x 1.5	9.5	6.0	28.0	36.0	19	19
FS7205-08-16-NWO-FG	1/2	13/16-16	M16 x 1.5	9.5	7.0	28.0	38.0	22	19
FS7205-08-18-NWO-FG	1/2	13/16-16	M18 x 1.5	9.5	9.0	28.0	41.0	24	19
FS7205-10-18-N WO-FG	5/8	1-14	M18 x 1.5	12.5	9.0	33.3	47.5	24	24
FS7205-10-22-N WO-FG	5/8	1-14	M22 x 1.5	12.5	12.0	33.3	49.0	27	24
FS7205-10-27-N WO-FG	5/8	1-14	M27X2.0	12.5	15.0	35.8	55.5	32	27
FS7205-12-22-NWO-FG	3/4	1-3/16-12	M22 x 1.5	15.5	12.0	37.3	49.0	27	27
FS7205-12-27-N WO-FG	3/4	1-3/16-12	M27X2.0	15.5	15.0	37.3	55.5	32	27
FS7205-16-33-N WO-FG	1	1-7/16-12	M33X2.0	20.5	20.0	41.7	59.5	41	36
FS7205-20-33-N WO-FG	1-1/4	1-11/16-12	M33X2.0	26.0	20.0	44.7	62.0	41	41
FS7205-20-42-N WO-FG	1-1/4	1-11/16-12	M42X2.0	26.0	26.0	44.7	63.0	50	41
FS7205-24-48-N WO-FG	1-1/2	2-12	M 48X2.0	32.0	32.0	48.8	71.5	55	50

MFS-MFS-MMAORB Tee
FS7210 Series

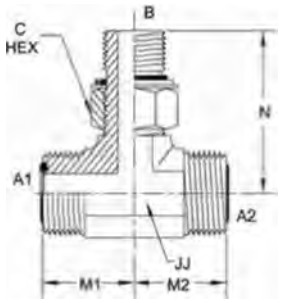

PART NO.SIZE	TUBE 0.0.	A1 THREAD	A2 THREAD	B THREAD	A1 DRILL	A2 DRILL	B DRILL	MI LGTH	M2 LGTH	N LGTH	C HEX	JJ FLATS
FS7210-04-04-12-NWO-FG	1/4	9/16-18	9/16-18	M12 x 1.5	4.5	4.5	4.0	21.5	21.5	33.0	17	14
FS7210-04-04-14-NWO-FG	1/4	9/16-18	9/16-18	M14 x 1.5	4.5	4.5	6.0	23.5	23.5	35.5	19	17
FS7210-06-06-14-NWO-FG	3/8	11/16-16	11/16-16	M14 x 1.5	6.5	6.5	6.0	25.0	25.0	35.5	19	17
FS7210-06-06-16-NWO-FG	3/8	11/16-16	11/16-16	M16 x 1.5	6.5	6.5	7.0	25.0	25.0	37.5	22	17
FS7210-08-08-14-NWO-FG	1/2	13/16-16	13/16-16	M14x 1.5	9.5	9.5	6.0	28.0	28.0	36.0	19	19
FS7210-08-08-18-N WO-FG	1/2	13/16-16	13/16-16	M18 x 1.5	9.5	9.5	9.0	28.0	28.0	41.0	24	19
FS7210-08-08-22-NWO-FG	1/2	13/16-16	13/16-16	M22 x 1.5	9.5	9.5	12.0	31.0	31.0	49.0	27	24
FS7210-10-10-22-N WO-FG	5/8	1-14	1-14	M22 x 1.5	12.5	12.5	12.0	33.5	33.5	49.0	27	24
FS7210-12-12-27-NWO-FG	3/4	1-3/16-12	1-3/16-12	M27X2.0	15.5	15.5	15.0	37.5	37.5	55.5	32	27
FS7210-16-16-33-NWO-FG	1	1-7/16-12	1-7/16-12	M33X2.0	20.5	20.5	20.0	41.5	41.5	59.5	41	36
FS7210-20-20-42-NWO-FG	1-1/4	1-11/16-12	1-11/16-12	M42X2.0	26.0	26.0	26.0	44.5	44.5	63.0	50	41
FS7210-24-24-48-NWO-FG	1-1/2	2-12	2-12	M48X2.0	32.0	32.0	32.0	49.0	49.0	71.5	55	50

O-Ring Face Seal Fittings

MFS-MMAORB-MFS Tee
FS7215 Series

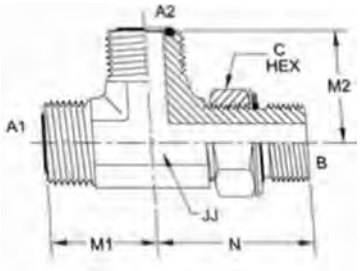

B-028

PART NO.SIZE	TUBE 0.0.	A1 THREAD	B THREAD	A2 THREAD	A1 DRILL	B DRILL	A2 DRILL	MI LBTH	N LGTH	M2 LGTH	C HEX	JJ FLATS
FS7215-04-12-04-NWO-FG	1/4	9/16-18	M12 x 1.5	9/16-18	4.5	4.0	4.5	21.5	33.0	21.5	17	14
FS7215-04-14-04-NWO-FG	1/4	9/16-18	M14 x 1.5	9/16-18	4.5	6.0	4.5	23.5	35.5	23.5	19	17
FS7215-06-14-06-NWO-FG	3/8	11/16-16	M14x 1.5	11/16-16	6.5	6.0	6.5	25.0	35.5	25.0	19	17
FS7215-06-16-06-NWO-FG	3/8	11/16-16	M16x 1.5	11/16-16	6.5	7.0	6.5	25.0	37.5	25.0	22	17
FS7215-08-14-08-NWO-FG	1/2	13/16-16	M14 x 1.5	13/16-16	9.5	6.0	9.5	28.0	36.0	28.0	19	19
FS7215-08-18-08-NWO-FG	1/2	13/16-16	M18 x 1.5	13/16-16	9.5	9.0	9.5	28.0	41.0	28.0	24	19
FS7215-08-22-08-NWO-FG	1/2	13/16-16	M22 x 1.5	13/16-16	9.5	12.0	9.5	31.0	49.0	31.0	27	24
FS7215-10-18-10-NWO-FG	5/8	1-14	M18 x 1.5	1-14	12.5	9.0	12.5	33.5	47.5	33.5	24	24
FS7215-10-22-10-NWO-FG	5/8	1-14	M22 x 1.5	1-14	12.5	12.0	12.5	33.5	49.0	33.5	27	24
FS7215-12-27-12-NWO-FG	3/4	1-3/16-12	M27X2.0	1-3/16-12	15.5	15.0	15.5	37.5	55.5	37.5	32	27
FS7215-16-33-16-NWO-FG	1	1-7/16-12	M33X2.0	1-7/16-12	20.5	20.0	20.5	41.5	59.5	41.5	41	36
FS7215-20-42-20-NWO-FG	1-1/4	1-11/16-12	M42X2.0	1-11/16-12	26.0	26.0	26.0	44.5	63.0	44.5	50	41
FS7215-24-48-24-NWO-FG	1-1/2	2-12	M48X2.0	2-12	32.0	32.0	32.0	49.0	71.5	49.0	55	50

MFS-MMAORB 45° Elbow
FS7300-NWO Series

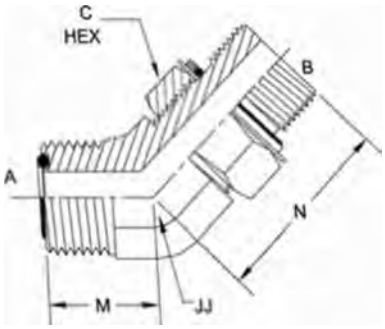

PART NO.SIZE	TUBE 0.0.	A THREAD	B THREAD	A DRILL	B DRILL	M LGTH	N LGTH	C HEX	JJ FLATS
FS7300-04-12-NWO-FG	1/4	9/16-18	M12 x 1.5	4.5	4.0	16.0	30.0	17	14
FS7300-04-14-NWO-FG	1/4	9/16-18	M14 x 1.5	4.5	6.0	17.5	31.5	19	17
FS7300-06-16-NWO-FG	3/8	11/16-16	M16 x 1.5	6.5	7.0	19.0	33.5	22	17
FS7300-08-14-NWO-FG	1/2	13/16-16	M14 x 1.5	9.5	6.0	20.5	32.0	19	19
FS7300-08-18-NWO-FG	1/2	13/16-16	M18 x 1.5	9.5	9.0	20.5	37.0	24	19
FS7300-10-22-NWO-FG	5/8	1-14	M22 x 1.5	12.5	12.0	23.5	44.0	27	24
FS7300-12-27-NWO-FG	3/4	1-3/16-12	M27X2.0	15.5	15.0	26.0	50.5	32	27
FS7300-16-33-NWO-FG	1	1-7/16-12	M33X2.0	20.5	20.0	30.0	52.5	41	36
FS7300-20-42-NWO-FG	1-1/4	1-11/16-12	M42X2.0	26.0	26.0	32.0	54.0	50	41
FS7300-24-48-NWO-FG	1-1/2	2-12	M48X2.0	32.0	32.0	37.0	56.5	55	50

MFS-MMORB IS06149-2 Straight

FS7640-O Series

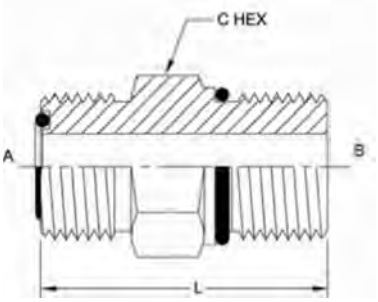

PART NO.SIZE	TUBE O.D.	A THREAD	B THREAD	A DRILL	B DRILL	I LGTH	C HEX
FS7640-04-10-0	6	9/16-18	MI 0X1	4.5	3.0	27.0	17.0
FS7640-04-12-0	6	9/16-18	M12X1.5	4.5	4.0	28.5	17.0
FS7640-04-14-0	6	9/16-18	M14X1.5	4.5	6.0	29.5	19.0
FS7640-06-12-0	10	11/16-16	M12X1.5	6.5	4.0	32.0	19.0
FS7640-06-14-0	10	11/16-16	M14X1.5	6.5	6.0	32.0	19.0
FS7640-06-16-0	10	11/16-16	M16X1.5	6.5	7.0	33.5	22.0
FS7640-06-18-0	10	11/16-16	M18X1.5	6.5	9.0	36.0	24.0
FS7640-06-22-O	10	11/16-16	M22X1.5	6.5	12.0	37.5	27.0
FS7640-08-14-0	12	13/16-16	MI 4X1.5	9.5	6.0	35.0	22.0
FS7640-08-16-0	12	13/16-16	M16X1.5	9.5	7.0	36.5	22.0
FS7640-08-18-0	12	13/16-16	M18X1.5	9.5	9.0	38.0	24.0
FS7640-08-22-O	12	13/16-16	M22X1.5	9.5	12.0	39.5	27.0
FS7640-08-26-O	12	13/16-16	M26X1.5	9.5	12.0	42.3	32.0
FS7640-08-27-O	12	13/16-16	M27X2.0	9.5	15.0	44.5	32.0
FS7640-08-33-O	12	13/16-16	M33X2.0	9.5	20.0	47.5	41.0
FS7640-10-18-0	16	1-14	M18X1.5	12.5	9.0	41.0	27.0
FS7640-10-22-0	16	1-14	M22X1.5	12.5	12.0	42.0	27.0
FS7640-10-27-0	16	1-14	M27X2.0	12.5	15.0	47.0	32.0
FS7640-10-33-0	16	1-14	M33X2.0	12.5	20.0	50.0	41.0
FS7640-12-22-0	20	1-3/16-12	M22X1.5	15.5	12.0	45.0	32.0
FS7640-12-27-0	20	1-3/16-12	M27X2.0	15.5	15.0	48.5	32.0
FS7640-12-33-0	20	1-3/16-12	M33X2.0	15.5	20.0	51.5	41.0
FS7640-16-33-0	25	1-7/16-12	M33X2.0	20.5	20.0	52.0	41.0
FS7640-20-38-O	30	1-11/16-12	M38X2.0	26.0	22.0	54.5	50.0
FS7640-20-42-O	30	1-11/16-12	M42X2.0	26.0	26.0	54.5	50.0

MFS-Metric Parallel Elastomer Seal

FS7701 Series

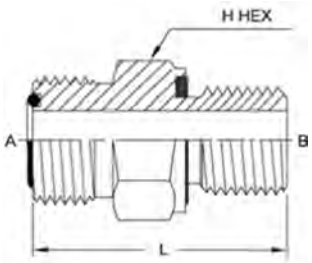

PART NO.SIZE	TUBE O.D.	A THREAD	B THREAD	A DRILL	B DRILL	I LGTH	H HEX
FS7001-04-10	1/4	9/16-18	MI 0X1	4.37	4.0	27.0	17.0
FS7001-04-12	1/4	9/16-18	M12X1.5	4.37	6.0	29.7	19.0
FS7001-04-14	1/4	9/16-18	M14X1.5	4.37	7.0	30.0	19.0
FS7001-06-18	3/8	11/16-16	M18X1.5	6.71	11.0	34.0	27.0
FS7001-10-18	5/8	1-14	M18X1.5	12.29	11.0	38.6	27.0
FS7001 -10-22	5/8	1-14	M22X1.5	12.29	14.0	41.1	27.0
FS7001-16-33	1	1-7/16-12	M33X2	20.60	20.0	49.8	41.0

Tube Fittings & Adapters

Tube Fittings & Adapters

Brennan Industries, Inc.'s steel and stainless steel 37° flare tube fittings meet all design and performance requirements for 37° flare tube fittings in Standard J514 published by the Society of Automotive Engineers (SAE). This design was originally founded as a JIC (Joint Industrial) design and was later adopted by the SAE to assure dimensional interchangeability between various manufacturers worldwide.

Brennan also offers a wide variety of pipe fittings and adapters including straight thread adapters, male and female pipe fittings, male to female pipe adapters and straight thread to pipe adapters.

C-007 **0302** Short Nut	(070111) C-007 **0304** Standard Nut	(070112) C-008 **0304-C** JIC Cap Nut	(070118/MS#51860) C-008 **0306** BHLN	(070117) C-009 **0306-N** BULN	(070110) C-009 **0318** JIC Tube Nut
(070115) C-010 **0319** JIC Tube Sleeve	C-010 **0403** Bore-MJ Straight	C-011 **0403-TS** MJ Tube Spud	C-011 **0404** Bore-MP Straight	C-012 **0405** Bore-FP Straight	C-012 **0406** Bore-MJ Bulkhead Straight
C-013 **0500** Bore-MJ 90°	C-013 **0501** Bore-MP 90°	C-014 **0600** Bore-Bore-MJ Tee	C-014 **0601** Bore-Bore-MP Tee	C-014 **0602** Bore-Bore-FP Tee	C-015 **0702** Bore-MJ-MJ Tee
C-015 **0800** Bore-FPS Straight	C-015 **0801** Bore-FPS 90°	C-016 **0900** Bore-FJS Straight	C-016 **0954** Brass Elbow	C-016 **0954-L** Brass Elbow	(140130) C-017 **1404** MP-FPS Straight
(140131) C-018 **1405** FP-FPS Straight	(140230) C-019 **1501** MP-FPS 90°	C-020 **1501-L** MP-FPS 90° Long	(140231) C-020 **1502** FP-FPS 90°	(140330) C-021 **1503** MP-FPS 45°	(140331) C-021 **1504** FP-FPS 45°

Tube Fittings & Adapters

C-022 **1601** MP-FPS-FPS Tee	C-022 **1602** FP-FPS-FPS Tee	C-023 **1603** FPS-FPS-FPS Tee	C-023 **1604** MPS-FPS-FPS-FPS Cross	C-024 **2111 Brass** PL-FJS Straight	C-024 **2112 Brass** PL-FSAES Straight
C-025 **2113 Brass** PL-MP Straight	C-025 **2114 Brass** PL-FIF Straight	C-026 **2115 Brass** PL-MIFS Straight	C-026 **2116 Brass** PL-SAE Straight	C-027 **2117 Brass** PL-Stem Straight	C-027 **2118 Brass** PL-PL Straight
C-028 **2119 Brass** PL-FP Straight	C-028 **2120 Brass** PL-MP 90° Elbow	(070101/MS#51501) C-029 **2403** MJ-MJ Straight	(070119/MS#51519) C-030 **2403-LH** MJ-MJ Straight Large Hex	(070102/MS#51500) C-031 C-032 **2404** MJ-MP Straight	C-033 **2404-L** MJ-MP Straight Long
C-033 **2404-LL** MJ-MP Straight X-Long	(070103/MS#51503) C-034 **2405** MJ-FP Straight	C-035/C-036 **2406** FJ-MP Straight Reducer	(070109/MS#51518) C-037 **2408** MJ Plug	(070201/MS#51505) C-037 **2500** MJ-MJ 90°	(070202/MS#51504) C-038 C-039 **2501** MJ-MP 90°
(071502) C-039 **2501-L** MJ-MP 90° Long	(071602) C-040 **2501-LL** MJ-MP 90° X-Long	C-040 **2501-LLL** MJ-MP 90° XX-Long	(070203/MS#51506) C-041 **2502** MJ-FP 90°	(070302/MS#51508) C-042 **2503** MJ-MP 45°	C-043 **2504** MJ-MJ 45°
C-043 **2505** MJ-FP 45°	(070425/MS#51512) C-044 **2601** MJ-MJ-MP Tee	(070427/MS#51513) C-045 **2602** MJ-MJ-FP Tee	(070401/MS#51510) C-046 **2603** MJ-MJ-MJ Tee	(070424/MS#51511) C-047 **2605** MJ-MP-MJ Tee	(070426/MS#51514) C-048 **2606** MJ-FP-MJ Tee

C-048 **2607** MJ-MP-MP Tee	C-049 **2608** MJ-FP-MP Tee	C-049 **2609** MJ-FP-FP Tee	C-050 **2610** MP-MP-MJ Tee	C-050 **2611** MJ-MP-FP Tee	C-051 **2612** FP-FP-MJ Tee
C-051 **2613** MP-FP-MJ Tee	(070501/MS#51517) C-052 **2650** MJ-MJ-MJ-MJ Cross	C-052 **2651** MJ-MP-MJ-MJ Cross	C-053 **2652** MJ-MJ-MJ-FP Cross	C-053 **2653** MJ-MJ-MP-MP Cross	C-053 **2654** MJ-MP-MJ-MP Cross
(070601/MS#51520) C-054 **2700** MJ-MJ Bulkhead Straight	(070701/MS#51507) C-054 **2701** MJ-MJ Bulkhead 90°	(070801/MS#51509) C-055 **2702** MJ-MJ Bulkhead 45°	(070959/MS#51515) C-055 **2703** MJ-MJ-MJ Bulkhead Branch Tee	(070958/MS#51516) C-056 **2704** MJ-MJ-MJ Bulkhead Run Tee	C-058 **2705** FP-MJ Bulkhead Straight
C-057 **2706** MP-MJ Bulkhead Straight	C-057 **3051** MP-FP Low Profile 90°	C-058 **3474-NWO** MAORB-ORB Straight	C-058 **3474-LLL-NWO** MAORB-ORB XX-Long Straight	(J515 Type I CH MS# 28778) C-059 **4000** Buna O-ring	(J515 Type III HK) C-059 **4001** Viton O-ring
C-059 **4005** Flange O-ring	C-060 **4404** HB-MP Straight	C-061 **4501** HB-MP 90° Straight	C-062 **4503** HB-MP 45°	C-062 **4504** HB-HB-HB Tee	C-063 **4505** HB-MP-HB Tee
C-063 **4506** HB-HB-MP Tee	C-064 **4601-NWO** HB-MAORB 90°	C-065 **4603-NWO** HB-MAORB 45°	C-066 **4604-0** HB-MORB Straight	(140138) C-067 **5000** FP-FP Straight	C-067 **5304** MP-BW Weld-on Fitting 304SS

Tube Fittings & Adapters

C-068 **5316** MP-BW Weld-on Fitting 316SS	(140137) C-068 **5404** MP-MP Hex Nipple	(140137) C-069 C-070 **5404-N** MP-MP Straight Nipple Long	(140139) C-071 **5405** MP-FP Straight Expander	(140140) C-072 **5406** MP-FP Reducer Bushing	C-073 **5406-C** Pipe Cap
(130109) C-073 **5406-HP** Hollow Hex Pipe Plug	(130109E) C-074 **5406-P** External Hex Pipe Plug	(130109A) C-074 **5406-SHP** Square Head Pipe Plug	(140237) C-075 **5500** MP-MP 90°	C-075 **5501** MP-MP 45°	(140239) C-076 **5502** MP-FP 90° Street Elbow
(140339) C-076 **5503** MP-FP 45° Street Elbow	(140238) C-077 **5504** FP-FP 90° Street Elbow	(140338) C-077 **5505** FP-FP 45°	140437 C-078 (As coded per SAE J846) **5600** MP-MP-MP Tee	140427 C-078 (As coded per SAE J846) **5601** MP-MP-FP Tee	(140424) C-079 **5602** MP-FP-FP Street Tee
140426 C-079 (As coded per SAE J846) **5603** MP-FP-MP Tee	(140425) C-080 **5604** FP-FP-MP Branch Tee	(140438) C-080 **5605** FP-FP-FP Tee	140537 C-081 (As coded per SAE J846) **5650** MP-MP-MP-MP Cross	140538 C-081 (As coded per SAE J846) **5652** FP-FP-FP-FP Cross	C-082 **5653** MP-MP-FP-FP Cross
C-082 **5655** MP-FP-FP-FP Cross	C-082 **5700** MP-MPS 90°	C-083 **5701** MJ-MPS 90°	C-083 **5702** FP-MPS 90°	C-084 **6000** Back-Up Washer	C-084 **6316** FJS-Weld Straight
(070120/MS#51525) C-085 C-086 **6400-0** MJ-MORB Straight	(070122/MS#51526) C-087 **6400-L-0** MJ-MORB Straight Long	C-087 **6400-LL-0** MJ-MORB Straight Extra Long	C-088 **6401-0** MORB-MP Straight	C-089 **6402-0** MORB-FJS Straight	C-089 **6404** FORB-MP Straight

C-090 **6405-0** MORB-FP Straight	(090109A) C-091 **6408-0** MORB External Hex Plug	(090109B) C-091 **6408-H-0** MORB Hollow Hex Plug	C-092/C-093 **6410-0** MORB-FORB Straight Reducer	C-094 **6420-0** FORB-FP Straight	C-094 **6425** FORB-FORB Straight
C-094 **6464-0** MORB-MORB Straight	C-095 **6464-L-0** MORB-MORB Straight	(070221) C-095 **6500** MJ-FJS 90°	C-096 **6500-L** MJ-FJS 90°	C-096 **6501** MP-FJS 90°	(070321/MS#51522) C-097 **6502** MJ-FJS 45°
C-097 **6503** FP-FJS 90°	C-098 **6504** MJ-FJS Straight	C-098 **6505** MP-FJS Straight	C-099 **6506** FP-FJS Straight	C-099 **6564** JIC-FJS-FORB Tee	C-100 **6565** FJS-FJS Straight
C-100 **6574** MJ-FJS-FP Tee	(070433/MS#51524) C-101 **6600** MJ-MJ-FJS Tee	(070432/MS#51523) C-102 **6602** MJ-FJS-MJ Tee	C-103 **6603** FJS-FJS-MJ Tee	C-103 **6604** FJS-FJS-MP Tee	C-103 **6605** FJS-FJS-FP Tee
C-104 **6606** FJS-FJS-FJS Tee	C-104 **6701** MJ-FJS Swept 90°	C-105 **6701-L** MJ-FJS Swept 90°	C-105 **6702** MJ-FJS Swept 45°	(070220/MS#51527) C-106 C-107 **6801-NWO** MJ-MAORB 90°	(071520) C-108 **6801-L-NWO** MJ-MAORB 90°
(071620) C-108 **6801-LL-NWO** MJ-MAORB 90°	(071720) C-109 **6801-LLL-NWO** MJ-MAORB 90°	(070320/MS#51528) C-109 **6802-NWO** MJ-MAORB 45°	(070429/MS#51529) C-110 **6803-NWO** MJ-MJ-MAORB Branch Tee	(070428/MS#51530) C-111 **6804-NWO** MJ-MAORB-MJ Run Tee	C-112 **6804-L-NWO** MJ-MAORB-MJ Run Tee

Tube Fittings & Adapters

C-112 **6805-NWO** MAORB-FP 90°	C-113 **6805-L-NWO** MAORB-FP 90° Long	C-113 **6806-NWO** MAORB-FP 90°	C-114 **6807-NWO** MAORB-MAORB 90°	C-114 **6807-LL-NWO** MAORB- MAORB 90° X-Long	C-114 **6808-NWO** MAORB-MAORB 45°
C-115 **6809-NWO** MAORB-FJS 90°	C-115 **6810-NWO** MAORB-FJS 45°	C-116 **6815-NWO** MAORB-FORB 90°	C-116 **6818** MAORB-FORB 45° Large Nut	C-116 **6820** FORB-MAORB-MJ Tee	C-117 **6832-NWO** FORB-FORB-MAORB Tee
C-117 **6835** MAORB-FORB- FORB Tee	C-118 **6840-NWO** MAORB-MAORB-MJ Tee	C-118 **6850-NWO** MJ-MJ-MAORB-MJ Cross	(140157) C-119 **6900-0** MORB-FPS Straight	(140257) C-120 **6901-NWO** MAORB-FPS 90°	(140357) C-121 **6902-NWO** MAORB-FPS 45°
C-121 **6911-NWO** MAORB-FPS-FPS Tee					

Short Nut
0302 Series

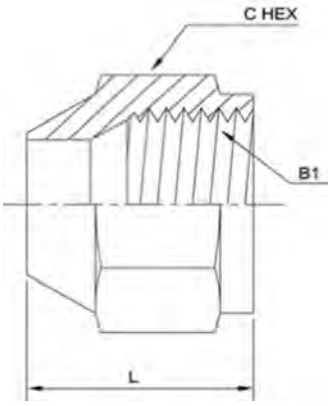

PART NO.SIZE	TUBE O.D.	B1 THREAD	I IGTH	C HEX
0302-04	1/4	7/16-20	0.593	0.562
0302-05	5/16	1/2-20	0.593	0.625
0302-06	3/8	9/16-18	0.656	0.687
0302-08	1/2	3/4-16	0.812	0.875
0302-10	5/8	7/8-14	0.937	1.000
0302-12	3/4	1-1/16-12	1.140	1.250
0302-14	7/8	1-3/16-12	1.203	1.375
0302-16	1	1-5/16-12	1.281	1.500
0302-20	1-1/4	1-5/8-12	1.437	2.000
0302-24	1-1/2	1-7/8-12	1.562	2.250
0302-32	2	2-1/2-12	2.000	2.875

Standard Nut
0304 Series

SAE# 070111

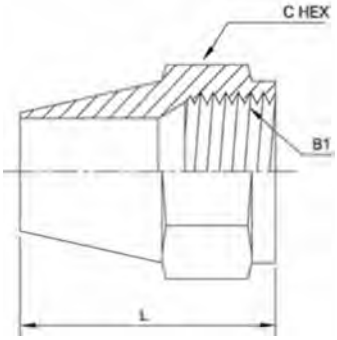

PART NO.SIZE	TUBE O.D.	B1 THREAD	L LGTH	C HEX
0304-04	1/4	7/16-20	1.00	0.562
0304-05	5/16	1/2-20	1.06	0.625
0304-06	3/8	9/16-18	1.09	0.687
0304-08	1/2	3/4-16	1.28	0.875
0304-10	5/8	7/8-14	1.48	1.000
0304-12	3/4	1-1/16-12	1.66	1.250
0304-14	7/8	1-3/16-12	1.81	1.375
0304-16	1	1-5/16-12	1.94	1.500
0304-20	1-1/4	1-5/8-12	2.19	2.000
0304-24	1-1/2	1-7/8-12	2.31	2.250
0304-32	2	2-1/2-12	2.75	2.875

Tube Fittings & Adapters

JIC Cap Nut
0304-C Series

SAE# 070112

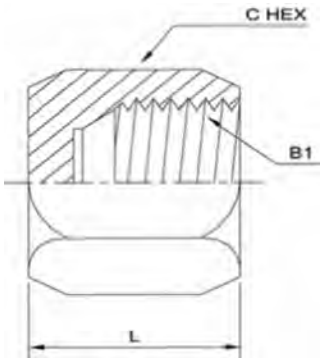

C-008

PART NO.SIZE	TUBE O.D.	B1 THREAD	L LGTH	C HEX
0304-C-02	1/8	5/16-24	0.500	0.375
0304-C-03	3/16	3/8-24	0.562	0.438
0304-C-04	1/4	7/16-20	0.594	0.562
0304-C-05	5/16	1/2-20	0.609	0.625
0304-C-06	3/8	9/16-18	0.625	0.687
0304-C-08	1/2	3/4-16	0.750	0.875
0304-C-10	5/8	7/8-14	0.844	1.000
0304-C-12	3/4	1-1/16-12	0.906	1.250
0304-C-14	7/8	1-3/16-12	0.969	1.375
0304-C-16	1	1-5/16-12	1.016	1.500
0304-C-20	1-1/4	1-5/8-12	1.062	2.000
0304-C-24	1-1/2	1-7/8-12	1.188	2.250
0304-C-32	2	2-1/2-12	1.438	2.875

BHLN
0306 Series

SAE# 070118 / MS# 51860

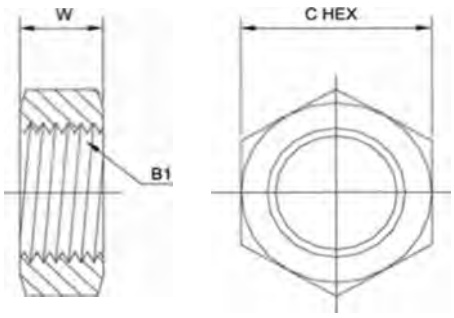

PART NO.SIZE	TUBE O.D.	B1 THREAD	W WIDTH	C HEX
0306-02	1/8	5/16-24	0.22	0.562
0306-03	3/16	3/8-24	0.22	0.625
0306-04	1/4	7/16-20	0.28	0.687
0306-05	5/16	1/2-20	0.28	0.750
0306-06	3/8	9/16-18	0.27	0.812
0306-08	1/2	3/4-16	0.31	1.000
0306-10	5/8	7/8-14	0.36	1.125
0306-12	3/4	1-1/16-12	0.41	1.375
0306-14	7/8	1-3/16-12	0.41	1.500
0306-16	1	1-5/16-12	0.41	1.625
0306-20	1-1/4	1-5/8-12	0.41	1.875
0306-24	1-1/2	1-7/8-12	0.41	2.125
0306-32	2	2-1/2-12	0.41	2.750

BULN 0306-N Series

SAE# 070117

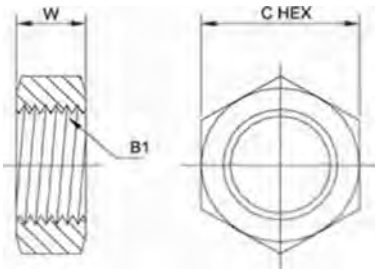

C-009

PART ND.SIZE	TUBE O.D.	B1 THREAD	W WIDTH	C HEX
0306-N-03	3/16	3/8-24	0.22	0.500
0306-N-04	1/4	7/16-20	0.28	0.562
0306-N-05	5/16	1/2-20	0.28	0.625
0306-N-06	3/8	9/16-18	0.27	0.687
0306-N-08	1/2	3/4-16	0.31	0.875
0306-N-10	5/8	7/8-14	0.36	1.000
0306-N-12	3/4	1-1/16-12	0.41	1.250
0306-N-14	7/8	1-3/16-12	0.41	1.375
0306-N-16	1	1-5/16-12	0.41	1.500

JIC Tube Nut
0318 Series

SAE# 070110

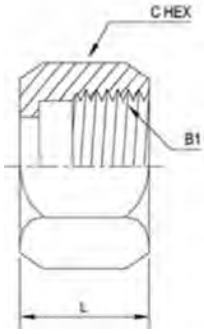

PART NO.SIZE	TUBE O.D.	B1 THREAD	L LGTH	C HEX
0318-02	1/8	5/16-24	0.550	0.375
0318-03	3/16	3/8-24	0.610	0.438
0318-04	1/4	7/16-20	0.620	0.562
0318-05	5/16	1/2-20	0.680	0.625
0318-06	3/8	9/16-18	0.730	0.688
0318-08	1/2	3/4-16	0.850	0.875
0318-10	5/8	7/8-14	0.980	1.000
0318-12	3/4	1-1/16-12	1.030	1.250
0318-14	7/8	1-3/16-12	1.090	1.375
0318-16	1	1-5/16-12	1.130	1.500
0318-20	1-1/4	1-5/8-12	1.230	2.000
0318-24	1-1/2	1-7/8-12	1.420	2.250
0318-32	2	2-1/2-12	1.750	2.875
0318-40	2-1/2	3-12	1.638	3.375

Tube Fittings & Adapters

JIC Tube Sleeve
0319 Series

SAE# 070115

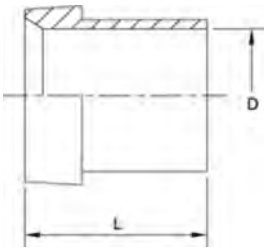

C-010

PART NO.SIZE	TUBE O.D.	L LGTH	D I.D.
0319-02	1/8	0.34	0.130
0319-03	3/16	0.34	0.193
0319-04	1/4	0.41	0.255
0319-05	5/16	0.44	0.318
0319-06	3/8	0.50	0.380
0319-08	1/2	0.56	0.505
0319-10	5/8	0.66	0.631
0319-12	3/4	0.68	0.756
0319-14	7/8	0.76	0.881
0319-16	1	0.78	1.006
0319-20	1-1/4	0.91	1.260
0319-24	1-1/2	1.12	1.510
0319-32	2	1.19	2.014

Bore-MJ Straight
0403 Series

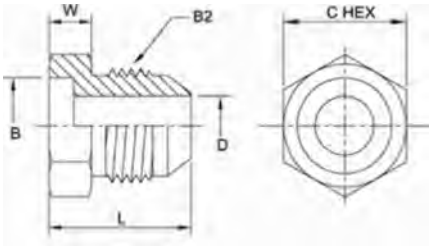

PART NO.SIZE	TUBE O.B.	B2 THREAD	B BURE	D DRILL	L LGTH	W WIDTH	C HEX
0403-04-04	1/4	7/16-20	0.256	0.172	0.796	0.220	0.500
0403-05-04	5/16	7/16-20	0.319	0.172	0.796	0.220	0.500
0403-05-05	5/16	1/2-20	0.319	0.234	0.796	0.220	0.562
0403-06-06	3/8	9/16-18	0.381	0.297	0.843	0.250	0.625
0403-06-08	3/8	3/4-16	0.381	0.391	0.937	0.250	0.812
0403-08-06	1/2	9/16-18	0.506	0.297	0.837	0.250	0.812
0403-08-08	1/2	3/4-16	0.506	0.391	0.937	0.250	0.812
0403-08-10	1/2	7/8-14	0.506	0.484	1.093	0.310	0.937
0403-10-08	5/8	3/4-16	0.631	0.391	0.937	0.250	0.937
0403-10-10	5/8	7/8-14	0.631	0.484	1.093	0.310	0.937
0403-10-12	5/8	1-1/16-12	0.631	0.609	1.281	0.380	1.250
0403-12-04	3/4	7/16-20	0.757	0.172	0.937	0.380	1.250
0403-12-08	3/4	3/4-16	0.757	0.391	0.937	0.380	1.250
0403-12-10	3/4	7/8-14	0.757	0.484	1.093	0.380	1.250
0403-12-12	3/4	1-1/16-12	0.757	0.609	1.281	0.380	1.250
0403-14-14	7/8	1-3/16-12	0.882	0.719	1.312	0.380	1.375
0403-16-12	1	1-1/16-12	1.007	0.609	1.281	0.380	1.375
0403-16-16	1	1-5/16-12	1.007	0.844	1.328	0.380	1.375
0403-16-20	1	1-5/8-12	1.007	1.078	1.453	0.460	1.688
0403-20-16	1-1/4	1-5/16-12	1.258	0.844	1.328	0.460	1.688
0403-20-20	1-1/4	1-5/8-12	1.258	1.078	1.453	0.460	1.688
0403-20-24	1-1/4	1-7/8-12	1.258	1.312	1.656	0.530	2.000
0403-24-20	1-1/2	1-5/8-12	1.508	1.078	1.453	0.530	2.000
0403-24-24	1-1/2	1-7/8-12	1.508	1.312	1.656	0.530	2.000
0403-32-32	2	2-1/2-12	2.008	1.781	2.046	0.680	2.625

MJ Tube Spud
0403-TS Series

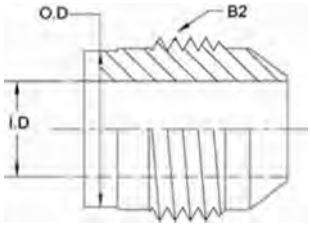

PART NO.SIZE	TUBE O.D.	B2 THREAD	O.D.	I.D.
0403-TS-04-04	1/4	7/16-20	0.361	0.172
0403-TS-06-06	3/8	9/16-18	0.471	0.297
0403-TS-08-08	1/2	3/4-16	0.628	0.391
0403-TS-10-10	5/8	7/8-14	0.752	0.484
0403-TS-12-12	3/4	1-1/16-12	0.862	0.609
0403-TS-16-16	1	1-5/16-12	1.159	0.844
0403-TS-20-20	1-1/4	1-5/8-12	1.504	1.078
0403-TS-24-24	1-1/2	1-7/8-12	1.628	1.312

Bore-MP Straight
0404 Series

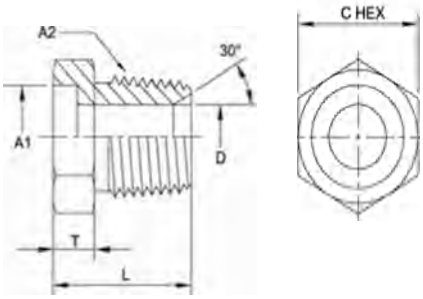

PART NO.SIZE	TUBE O.D.	A1 BORE	A2 NPTF	0 DRILL	L LCTH	T WIDTH	C HEX
0404-04-02	1/4	0.256	1/8-27	0.188	0.562	0.19	0.500
0404-04-04	1/4	0.256	1/4-18	0.281	0.843	0.27	0.625
0404-06-04	3/8	0.381	1/4-18	0.281	0.812	0.25	0.625
0404-06-06	3/8	0.381	3/8-18	0.406	0.875	0.31	0.750
0404-08-06	1/2	0.506	3/8-18	0.406	0.843	0.28	0.812
0404-08-08	1/2	0.506	1/2-14	0.531	1.100	0.36	0.875
0404-10-06	5/8	0.631	3/8-18	0.406	0.843	0.28	0.812
0404-10-08	5/8	0.631	1/2-14	0.531	1.078	0.33	0.937
0404-12-08	3/4	0.757	1/2-14	0.531	1.080	0.36	0.937
0404-12-12	3/4	0.757	3/4-14	0.719	1.093	0.34	1.125
0404-16-12	1	1.007	3/4-16	0.719	1.260	0.50	1.250
0404-16-16	1	1.007	1-11 1/2	0.938	1.312	0.38	1.375
0404-20-16	1-1/4	1.258	1-11 1/2	0.938	1.376	0.44	1.688
0404-20-20	1-1/4	1.258	1-1/4-11 1/2	1.250	1.406	0.44	1.688
0404-24-16	1-1/2	1.508	1-11 1/2	0.938	1.375	0.50	1.750
0404-24-20	1-1/2	1.508	1-1/4-11 1/2	1.250	1.500	0.50	2.000
0404-24-24	1-1/2	1.508	1-1/2-11 1/2	1.500	1.500	0.50	2.000
0404-32-32	2	2.008	2-11 1/2	1.938	1.781	0.75	2.625

Bore-FP Straight
0405 Series

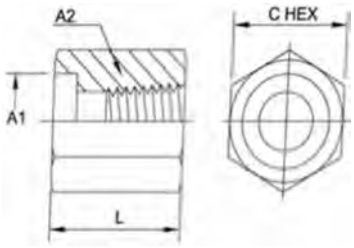

PART NO.SIZE	TUBE O.D.	A1 BORE	A2 NPTT	L LGTH	C HEX
0405-04-02	1/4	0.256	1/8-27	0.640	0.562
0405-06-04	3/8	0.381	1/4-18	0.843	0.750
0405-06-06	3/8	0.381	3/8-18	0.906	0.875
0405-08-06	1/2	0.506	3/8-18	0.906	0.875
0405-12-12	3/4	0.757	3/4-14	1.203	1.375
0405-16-16	1	1.007	1-11-1/2	1.437	1.625
0405-20-20	1-1/4	1.258	1-1/4-11-1/2	1.531	2.000

Bore-MJ
Bulkhead Straight
0406 Series

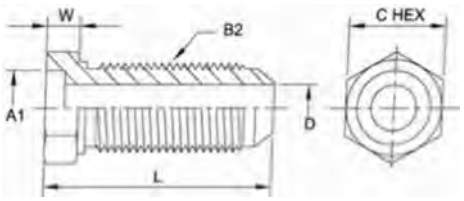

PART NO.SIZE	TUBE O.D.	A1 BORE	B2 THREAD	0 DRILL	L LGTH	W WIDTH	C HEX
0406-08-08	1/2	0.506	3/4-16	0.391	1.845	0.375	1.000
0406-12-12	3/4	0.757	1-1/16-12	0.609	2.300	0.500	1.375
0406-16-16	1	1.007	1-5/16-12	0.844	2.300	0.500	1.625

Bore-MJ 90°
0500 Series

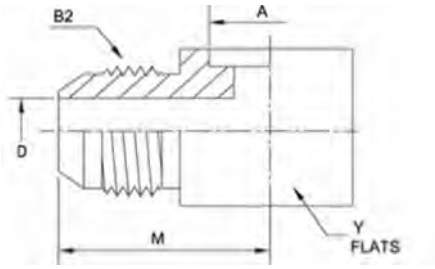

C-013

PART NO.SIZE	TUBE 0.0.	A BORE	B2 JIC	0 BORE	M LGTH	Y FIATS
0500-04-04	1/4	0.256	7/16-20	0.172	0.890	0.500
0500-05-05	5/16	0.319	1/2-20	0.234	0.953	0.562
0500-06-04	3/8	0.381	7/16-20	0.172	1.062	0.625
0500-06-06	3/8	0.381	9/16-18	0.297	1.062	0.625
0500-08-08	1/2	0.506	3/4-16	0.391	1.250	0.812
0500-10-08	5/8	0.631	3/4-16	0.391	1.310	0.937
0500-10-10	5/8	0.631	7/8-14	0.484	1.453	0.937
0500-12-08	3/4	0.757	3/4-16	0.391	1.453	0.937
0500-12-12	3/4	0.757	1-1/16-12	0.609	1.656	1.125
0500-14-14	7/8	0.882	1-3/16-12	0.719	1.734	1.250
0500-16-12	1	1.007	1-1/16-12	0.609	1.762	1.375
0500-16-16	1	1.007	1-5/16-12	0.844	1.812	1.375
0500-20-16	1-1/4	1.258	1-5/16-12	0.844	2.062	1.750
0500-20-20	1-1/4	1.258	1-5/8-12	1.078	2.062	1.750
0500-24-16	1-1/2	1.508	1-5/16-12	0.844	2.328	2.000
0500-24-20	1-1/2	1.508	1-5/8-12	1.078	2.328	2.000
0500-24-24	1-1/2	1.508	1-7/8-12	1.312	2.328	2.000
0500-32-32	2	2.008	2-1/2-12	1.781	3.062	2.625

Bore-MP 90°
0501 Series

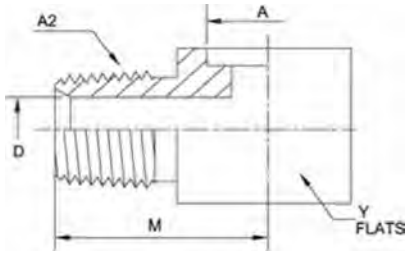

PART NO.SIZE	TUBE 0.0.	A BORE	A2 NPTF	0 DRILL	M LGTH	Y FLATS
0501-06-04	3/8	0.381	1/4-18	0.281	1.055	0.625
0501-08-06	1/2	0.506	3/8-18	0.406	1.250	0.812
0501-16-16	1	1.007	1-11-1/2	0.938	1.812	1.375

Tube Fittings & Adapters

Bore-Bore-MJ Tee
0600 Series

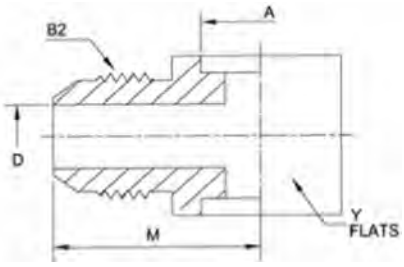

C-014

PART NO.SIZE	TUBE O.D.	A BORE	B2 JK	0 DRILL	M LGTH	Y FLATS
0600-04-04-04	1/4	0.256	7/16-20	0.172	0.890	0.500
0600-05-05-05	5/16	0.319	1/2-20	0.234	0.953	0.562
0600-06-06-06	3/8	0.381	9/16-18	0.297	1.062	0.625
0600-08-08-08	1/2	0.506	3/4-16	0.391	1.250	0.812
0600-10-10-10	5/8	0.631	7/8-14	0.484	1.453	0.937
0600-12-12-12	3/4	0.757	1-1/16-12	0.609	1.656	1.125
0600-14-14-14	7/8	0.882	1-3/16-12	0.719	1.734	1.250
0600-16-16-16	1	1.007	1-5/16-12	0.844	1.812	1.375
0600-20-20-20	1-1/4	1.258	1-5/8-12	1.078	2.062	1.750
0600-24-24-24	1-1/2	1.508	1-7/8-12	1.312	2.328	2.000

Bore-Bore-MP Tee
0601 Series

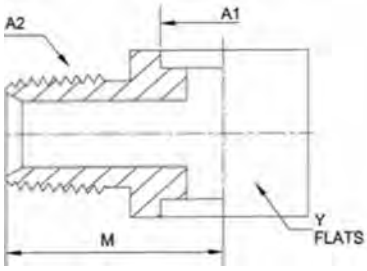

PART NO.SIZE	TUBE O.D.	A1 BORE	A2 NPTF	M LGTH	Y FLATS
0601-16-16-16	1	1.007	1-11-1/2	1.97	1.375

Bore-Bore-FP Tee
0602 Series

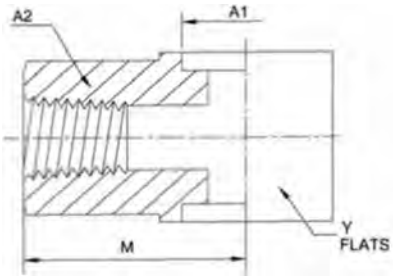

PART NO.SIZE	TUBE O.D.	A1 BORE	A2 NPTF	M LGTH	Y FLATS
0602-06-06-04	3/8	0.381	1/4-18	0.90	0.750
0602-16-16-16	1	1.007	1-11-1/2	1.65	1.625

Bore-MJ-MJ Tee
0702 Series

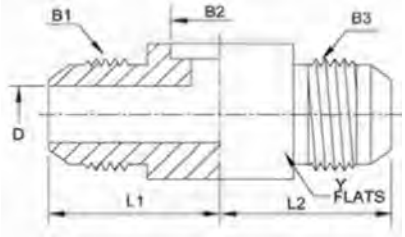

PART NO.SiZE	TUBE 0.0.	B1 JIC	B3 JIC	B2 BORE	D DRILL	LI LGTH	L2 LGTH	Y FLATS
0702-05-05-05	5/16	1/2-20	1/2-20	0.319	0.234	0.970	0.970	0.562
0702-06-06-06	3/8	9/16-18	9/16-18	0.381	0.297	1.090	1.090	0.625
0702-08-08-08	1/2	3/4-16	3/4-16	0.506	0.391	1.250	1.250	0.812
0702-10-10-10	5/8	7/8-14	7/8-14	0.631	0.484	1.450	1.450	0.937
0702-12-12-12	3/4	1-1/16-12	1-1/16-12	0.757	0.609	1.660	1.660	1.125
0702-14-12-12	7/8	1-3/16-12	1-1/16-12	0.757	0.609	1.734	1.660	1.250
0702-16-16-16	1	1-5/16-12	1-5/16-12	1.007	0.844	1.810	1.810	1.375

Bore-FPS Straight
0800 Series

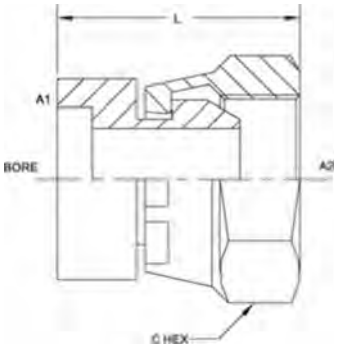

PART NO.SIZE	TUBE 0.0.	A1 BORE	A2 NPSM	I LGTH	C HEX
0800-08-06	1/2	0.506	3/8-18	1.023	0.875
0800-10-08	5/8	0.631	1/2-14		1.000
0800-12-08	3/4	0.757	1/2-14		1.000
0800-12-12	3/4	0.757	3/4-14		1.250

Bore-FPS 90
0801 Series

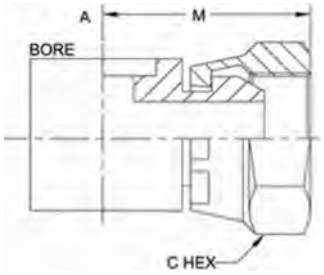

PART NO.SIZE	TUBE 0.0.	A BORE	A1 NPSM	M LGTH	C HEX
0801-06-04	3/8	0.381	1/4-18	0.880	0.688
0801-08-08	1/2	0.506	1/2-14		1.000

Tube Fittings & Adapters

Bore-FJS Straight
0900 Series

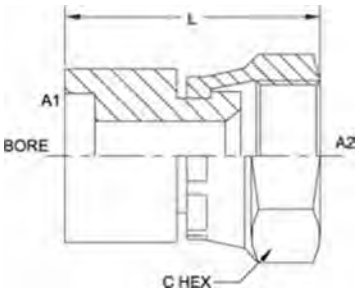

C-016

PART NO.SIZE	TUBE O.D.	A1 BORE	A2 THREAD	L LOTH	C HEX
0900-04-04	1/4	0.256	7/16-20	0.900	0.562
0900-08-08	1/2	0.506	3/4-16		0.812
0900-12-12	3/4	0.757	1-1/16-12	1.625	1.250
0900-16-16	1	1.007	1-5/16-12		1.375
0900-20-20	1-1/4	1.258	1-5/8-12	1.950	2.000

Brass Elbow
0954 Series

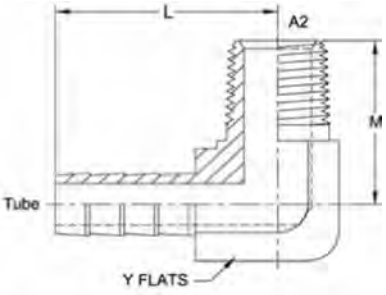

PART NO.SIZE	TUBE O.D.	A2 NPTF	L LGTH	M LOTH	Y FLATS
0954	5/16	1/4-18	1.03	0.91	0.562

Brass Elbow
0954-L Series

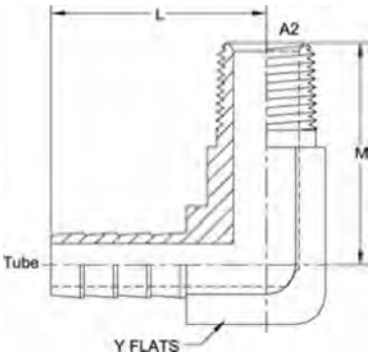

PART NO.SIZE	TUBE O.D.	A2 NPTF	I LGTH	M LGTH	Y FLATS
0954-L	5/16	1/4-18	1.15	1.33	0.550

MP-FPS Straight
1404 Series

SAE# 140130

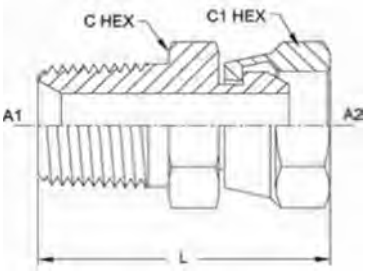

C-017

PART NO.SIZE	A1 NPTF	A2 NPSM	A1 DRILL	A2 DRILL	LI HEX	L LGTH	C HEX	CI HEX
1404-02-02	1/8-27	1/8-27	0.188	0.150	0.94	1.08	0.562	0.562
1404-02-04	1/8-27	1/4-18	0.188	0.220	1.05	1.24	0.688	0.688
1404-04-02	1/4-18	1/8-27	0.281	0.150	1.18	1.32	0.688	0.562
1404-04-04	1/4-18	1/4-18	0.281	0.220	1.23	1.42	0.688	0.688
1404-04-06	1/4-18	3/8-18	0.281	0.340	1.31	1.52	0.812	0.875
1404-04-08	1/4-18	1/2-14	0.281	0.460	1.42	1.70	1.000	1.000
1404-06-04	3/8-18	1/4-18	0.406	0.220	1.30	1.49	0.750	0.688
1404-06-06	3/8-18	3/8-18	0.406	0.340	1.30	1.52	0.875	0.875
1404-06-08	3/8-18	1/2-14	0.406	0.460	1.42	1.70	1.000	1.000
1404-08-04	1/2-14	1/4-18	0.531	0.220	1.52	1.71	0.875	0.688
1404-08-06	1/2-14	3/8-18	0.531	0.340	1.56	1.77	0.875	0.875
1404-08-08	1/2-14	1/2-14	0.531	0.460	1.61	1.89	1.000	1.000
1404-08-12	1/2-14	3/4-14	0.531	0.635	1.74	2.09	1.250	1.250
1404-12-06	3/4-14	3/8-18	0.719	0.340	1.56	1.77	1.125	0.875
1404-12-08	3/4-14	1/2-14	0.719	0.460	1.65	1.93	1.125	1.000
1404-12-12	3/4-14	3/4-14	0.719	0.635	1.75	2.10	1.250	1.250
1404-12-16	3/4-14	1-11 1/2	0.719	0.831	1.81	2.16	1.500	1.500
1404-12-20	3/4-14	1 1/4-1 1/2	0.719	1.087	1.86	2.28	1.875	1.875
1404-16-06	1-11 1/2	3/8-18	0.938	0.340	1.81	2.02	1.375	0.875
1404-16-08	1-11 1/2	1/2-14	0.938	0.460	1.88	2.16	1.375	1.000
1404-16-12	1-11 1/2	3/4-14	0.938	0.635	1.94	2.29	1.500	1.250
1404-16-16	1-11 1/2	1-11 1/2	0.938	0.831	2.00	2.35	1.500	1.500
1404-16-20	1-11 1/2	1 1/4-11 1/2	0.938	1.087	2.05	2.47	1.875	1.875
1404-16-24	1-11-1/2	1-1/2-11-1/2	0.938	1.317	2.21	2.63	2.125	2.125
1404-20-16	1 1/4-11 1/2	1-11 1/2	1.250	0.831	2.05	2.40	1.875	1.500
1404-20-20	1 1/4-11 1/2	1 1/4-11 1/2	1.250	1.087	2.10	2.52	1.875	1.875
1404-20-24	1 1/4-11 1/2	1 1/2-11 1/2	1.250	1.317	2.09	2.51	2.125	2.125
1404-24-20	1 1/2-11 1/2	1 1/4-11 1/2	1.500	1.087	2.12	2.54	2.125	1.875
1404-24-24	1 1/2-11 1/2	1 1/2-11 1/2	1.500	1.317	2.27	2.69	2.125	2.125
1404-32-32	2-11 1/2	2-11 1/2	1.938	1.802	2.37	2.79	2.625	2.625
1404-40-40								

Tube Fittings & Adapters

FP-FPS Straight
1405 Series

SAE# 140131

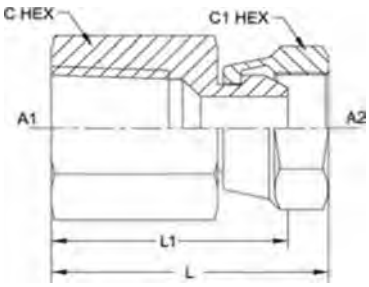

C-018

PART NO.SIZE	A1 NPTF	A2 NPSM	A2 DRILL	LI LETH	L LETH	C HEX	CI HEX
1405-02-02	1/8-27	1/8-27	0.150	0.88	1.02	0.562	0.562
1405-02-04	1/8-27	1/4-18	0.220	1.10	1.29	0.688	0.688
1405-04-02	1/4-18	1/8-27	0.150	1.19	1.33	0.688	0.562
1405-04-04	1/4-18	1/4-18	0.220	1.23	1.42	0.688	0.688
1405-04-06	1/4-18	3/8-18	0.340	1.27	1.48	0.688	0.875
1405-04-08	1/4-18	1/2-14	0.460	1.32	1.60	1.000	1.000
1405-06-04	3/8-18	1/4-18	0.220	1.29	1.48	0.875	0.688
1405-06-06	3/8-18	3/8-18	0.340	1.31	1.52	0.875	0.875
1405-06-08	3/8-18	1/2-14	0.460	1.50	1.78	1.000	1.000
1405-08-04	1/2-14	1/4-18	0.220	1.56	1.75	1.000	0.688
1405-08-06	1/2-14	3/8-18	0.340	1.45	1.66	0.875	0.875
1405-08-08	1/2-14	1/2-14	0.460	1.56	1.84	1.000	1.000
1405-08-12	1/2-14	3/4-14	0.635	1.62	1.97	1.250	1.250
1405-12-08	3/4-14	1/2-14	0.460	1.63	1.91	1.250	1.000
1405-12-12	3/4-14	3/4-14	0.635	1.62	1.97	1.250	1.250
1405-12-16	3/4-14	1-11-1/2	0.831	1.83	2.18	1.500	1.500
1405-16-12	1-11-1/2	3/4-14	0.635	1.90	2.25	1.500	1.250
1405-16-16	1-11-1/2	1-11-1/2	0.831	2.00	2.35	1.500	1.500
1405-20-20	1-1/4-11-1/2	1-1/4-11-1/2	1.087	1.98	2.40	1.875	1.875
1405-24-24	1-1/2-11-1/2	1-1/2-11-1/2	1.317	2.10	2.52	2.125	2.125
1405-32-32	2-11-1/2	2-11-1/2	1.802	2.13	2.55	2.625	2.625

MP-FPS 90°
1501 Series

SAE# 140230

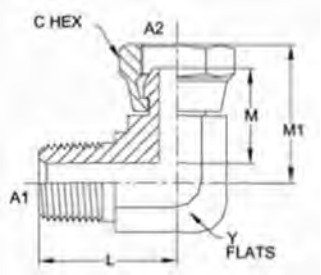

C-019

PART NO.SIZE	A1 NPTF	A2 NPSM	A1 DRILL	A2 DRILL	L LDTH	M LGTH	MI LGTH	C HEX	Y FLATS
1501-02-02-FG	1/8-27	1/8-27	0.188	0.15	0.72	0.70	0.84	0.562	0.438
1501-02-04-FG	1/8-27	1/4-18	0.188	0.22	0.90	0.88	1.07	0.688	0.562
1501-04-02-FG	1/4-18	1/8-27	0.281	0.15	1.09	0.77	0.91	0.562	0.562
1501-04-04-FG	1/4-18	1/4-18	0.281	0.22	1.09	0.88	1.07	0.688	0.562
1501-04-06-FG	1/4-18	3/8-18	0.281	0.34	1.22	0.99	1.20	0.875	0.750
1 501 -04-08-hG	1/4-18	1/2-14	0.281	0.46	1.28	1.11	1.39	1.000	0.875
1501-06-04-FG	3/8-18	1/4-18	0.406	0.22	1.22	0.99	1.18	0.688	0.750
1501-06-06-FG	3/8-18	3/8-18	0.406	0.34	1.22	0.99	1.20	0.875	0.750
1501-06-08-FG	3/8-18	1/2-14	0.406	0.46	1.28	1.11	1.39	1.000	0.875
1501-06-12-FG	3/8-18	3/4-14	0.406	0.64	1.40	1.30	1.65	1.250	1.062
1501-08-04-FG	1/2-14	1/4-18	0.531	0.22	1.47	1.02	1.21	0.688	0.875
1501*08*06*FG	1/2-14	3/8-18	0.531	0.34	1.47	1.04	1.25	0.875	0.875
1501-08-08-FG	1/2-14	1/2-14	0.531	0.46	1.47	1.11	1.39	1.000	0.875
1501-08-12-FG	1/2-14	3/4-14	0.531	0.64	1.59	1.30	1.65	1.250	1.062
1501-12-04-FG	3/4-14	1/4-18	0.719	0.22	1.59	1.24	1.43	0.688	1.062
1501-12-06-FG	3/4-14	3/8-18	0.719	0.34	1.59	1.24	1.45	0.875	1.062
1501-12-08-FG	3/4-14	1/2-14	0.719	0.46	1.59	1.24	1.52	1.000	1.062
1501-12-12-FG	3/4-14	3/4-14	0.719	0.64	1.59	1.30	1.65	1.250	1.062
1501-12-16-FG	3/4-14	1-11 1/2	0.719	0.83	1.78	1.54	1.89	1.500	1.312
1501-12-20-FG	3/4-14	1 1/4-11 1/2	0.719	1.09	2.16	1.73	2.15	1.875	1.625
1501-16-08-FG	1-11 1/2	1/2-14	0.938	0.46	1.97	1.43	1.71	1.000	1.312
1501-16-12-FG	1-11 1/2	3/4-14	0.938	0.64	1.97	1.43	1.78	1.250	1.312
1501-16-16-FG	1-11 1/2	1-11 1/2	0.938	0.83	1.97	1.54	1.89	1.500	1.312
1501-16-20-FG	1-11 1/2	1 1/4-11 1/2	0.938	1.09	2.35	1.73	2.15	1.875	1.625
1501-20-12-FG	1 1/4-11 1/2	3/4-14	1.250	0.64	2.38	1.56	1.91	1.250	1.625
1501-20-16-FG	1 1/4-11 1/2	MI 1/2	1.250	0.83	2.38	1.70	2.05	1.500	1.625
1501-20-20-FG	1 1/4-11 1/2	1 1/4-11 1/2	1.250	1.09	2.38	1.73	2.15	1.875	1.625
1501-20-24-FG	1 1/4-11 1/2	1 1/2-11 1/2	1.250	1.32	2.61	1.89	2.31	2.125	1.875
1501-24-20-FG	1 1/2-11 1/2	1 1/4-11 1/2	1.500	1.09	2.64	1.77	2.19	1.875	1.875
1501-24-24-FG	1 1/2-11 1/2	1 1/2-11 1/2	1.500	1.32	2.64	1.89	2.31	2.125	1.875
1501-32-32-FG	2-11 1/2	2-11 1/2	1.938	1.80	3.00	2.27	2.69	2.625	2.500

MP-FPS 90* Long
1501-L Series

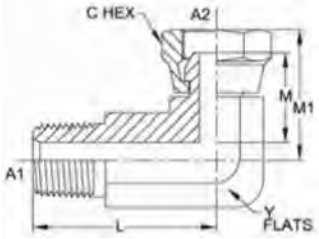

PART ND.SIZE	A1 NPTF	A2 NPSM	A1 DRILL	A2 DRILL	L LGTH	M LOTH	MI LGTH	C HEX	Y FLATS
1501-L-02-02-FG	1/8-27	1/8-27	0.188	0.150	1.64	0.70	0.84	0.562	0.438
1501-L-04-04-FG	1/4-18	1/4-18	0.281	0.220	2.25	0.88	1.07	0.688	0.562
1501-L-06-06-FG	3/8-18	3/8-18	0.406	0.340	2.76	0.99	1.20	0.875	0.750
1501-L-08-06-FG	1/2-14	3/8-18	0.531	0.340	3.19	1.04	1.25	0.875	0.875
1501-L-08-08-FG	1/2-14	1/2-14	0.531	0.460	3.19	1.11	1.39	1.000	0.875
1501-L-12-12-FG	3/4-14	3/4-14	0.719	0.635	3.66	1.30	1.65	1.250	1.062
1501-L-16-16-FG	1-11-1/2	1-11-1/2	0.938	0.831	4.33	1.54	1.89	1.500	1.312

FP-FPS 90°
1502 Series

SAE# 140231

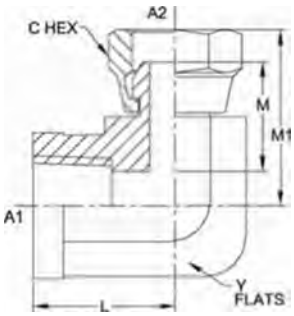

PART NO.SIZE	A1 NPTF	A2 NPSM	A2 DRILL	L LGTH	M LGTH	MI LGTH	C HEX	Y FLATS
1502-02-02-FG	1/8-27	1/8-27	0.150	0.66	0.80	0.94	0.562	0.562
1502-02-04-FG	1/8-27	1/4-18	0.220	0.66	0.91	1.10	0.688	0.562
1502-04-02-FG	1/4-18	1/8-27	0.150	0.88	0.88	1.02	0.562	0.750
1502-04-04-FG	1/4-18	1/4-18	0.220	0.88	0.99	1.18	0.688	0.750
1502-04-06-FG	1/4-18	3/8-18	0.340	0.88	1.01	1.22	0.875	0.750
1502-06-04-FG	3/8-18	1/4-18	0.220	1.02	1.04	1.23	0.688	0.875
1502-06-06-FG	3/8-18	3/8-18	0.340	1.02	1.06	1.27	0.875	0.875
1502-06-08-FG	3/8-18	1/2-14	0.460	1.02	1.13	1.41	1.000	0.875
1502-08-04-FG	3/4-16	1/4-18	0.220	1.23	1.15	1.34	0.688	1.062
1502-08-06-FG	1/2-14	3/8-18	0.340	1.23	1.17	1.38	0.875	1.062
1502-08-08-FG	1/2-14	1/2-14	0.460	1.23	1.24	1.52	1.000	1.062
1502-08-12-FG	1/2-14	3/4-14	0.635	1.23	1.24	1.59	1.250	1.062
1502-12-08-FG	3/4-14	1/2-14	0.460	1.36	1.47	1.75	1.000	1.312
1502-12-12-FG	3/4-14	3/4-14	0.635	1.36	1.47	1.82	1.250	1.312
1502-12-16-FG	3/4-14	1-11 1/2	0.831	1.36	1.58	1.93	1.500	1.312
1502-16-12-FG	1-11 1/2	3/4-14	0.635	1.62	1.62	1.97	1.250	1.625
1502-16-16-FG	1-11 1/2	1-11 1/2	0.831	1.62	1.73	2.08	1.500	1.625
1502-20-16-FG	1 1/4-11 1/2	1-11 1/2	0.831	1.70	1.80	2.15	1.500	1.875
1502-20-20-FG	1 1/4-11 1/2	1 1/4-11 1/2	1.087	1.70	1.83	2.25	1.875	1.875
1502-24-24-FG	1 1/2-11 1/2	1 1/2-11 1/2	1.317	2.08	2.41	2.83	2.125	2.562
1502-32-32-FG	2-11 1/2	2-11 1/2	1.802	2.39	2.57	2.99	2.625	2.812

MP-FPS 45°
1503 Series

SAE# 140330

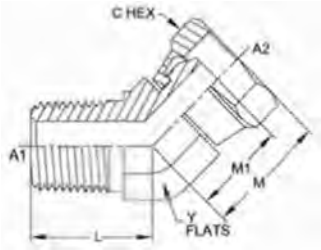

C-021

PART NO.SIZE	A1 NPTF	A2 NPSM	A1 DRILL	A2 DRILL	L LOTH	MI L6TH	M LBTH	C HEX	Y FIATS
1503-02-02-FG	1/8-27	1/8-27	0.188	0.150	0.52	0.62	0.76	0.562	0.438
1503-02-04-FG	1/8-27	1/4-18	0.188	0.220	0.67	0.73	0.92	0.688	0.562
1503-04-02-FG	1/4-18	1/8-27	0.281	0.150	0.86	0.62	0.76	0.562	0.562
1503-04-04-FG	1/4-18	1/4-18	0.281	0.220	0.86	0.73	0.92	0.688	0.562
1503-04-06-FG	1/4-18	3/8-18	0.281	0.340	0.95	0.81	1.02	0.875	0.750
1503-04-08-FG	1/4-18	1/2-14	0.281	0.460	0.98	0.88	1.16	1.000	0.875
1503-06-04-FG	3/8-18	1/4-18	0.406	0.220	0.95	0.79	0.98	0.688	0.750
1503-06-06-FG	3/8-18	3/8-18	0.406	0.340	0.95	0.81	1.02	0.875	0.750
1503-06-08-FG	3/8-18	1/2-14	0.406	0.460	0.98	0.88	1.16	1.000	0.875
1503-08-04-FG	1/2-14	1/4-18	0.531	0.220	1.17	0.79	0.98	0.688	0.875
1503-08-06-FG	1/2-14	3/8-18	0.531	0.340	1.17	0.81	1.02	0.875	0.875
1503-08-08-FG	1/2-14	1/2-14	0.531	0.460	1.17	0.88	1.16	1.000	0.875
1503-08-12-FG	1/2-14	3/4-14	0.531	0.635	1.20	1.02	1.37	1.250	1.062
1503-12-06-FG	3/4-14	3/8-18	0.719	0.340	1.20	0.98	1.19	0.875	1.062
1503-12-08-FG	3/4-14	1/2-14	0.719	0.460	1.20	1.02	1.30	1.000	1.062
1503-12-12-FG	3/4-14	3/4-14	0.719	0.635	1.20	1.02	1.37	1.250	1.062
1503-12-16-FG	3/4-14	1-11 1/2	0.719	0.831	1.29	1.15	1.50	1.500	1.312
1503-16-12-FG	1-11 1/2	3/4-14	0.938	0.635	1.48	1.04	1.39	1.250	1.312
1503-16-16-FG	1-11 1/2	1-11 1/2	0.938	0.831	1.48	1.15	1.50	1.500	1.312
1503-16-20-FG	1-11 1/2	1-1/4-11 1/2	0.938	1.087	1.64	1.23	1.65	1.875	1.625
1503-20-16-FG	1-1/4-11 1/2	1-11 1/2	1.250	0.831	1.67	1.20	1.55	1.500	1.625
1503-20-20-FG	1-1/4-11 1/2	1-1/4-11 1/2	1.250	1.087	1.67	1.23	1.65	1.875	1.625
1503-24-24-FG	1-1/2-11 1/2	1-1/2-11 1/2	1.500	1.317	1.77	1.35	1.77	2.125	1.875
1503-32-32-FG	2-11 1/2	2-11 1/2	1.938	1.802	2.11	1.46	1.88	2.625	2.500

FP-FPS 45°
1504 Series

SAE# 140331

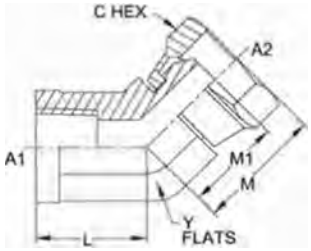

PART NO.SIZE	A1 NPTF	A2 NPSM	A2 DRILL	L LOTH	MI LBTH	M LGTH	C HEX	Y FLATS
1504-02-02-FG	1/8-27	1/8-27	0.150	0.50	0.62	0.76	0.562	0.562
1504-02-04-FG	1/8-27	1/4-18	0.220	0.50	0.76	0.95	0.688	0.750
1504-04-04-FG	1/4-18	1/4-18	0.220	0.69	0.76	0.95	0.688	0.750
1504-04-06-FG	1/4-18	3/8-18	0.340	0.69	0.77	0.98	0.875	0.875
1504-06-04-FG	3/8-18	1/4-18	0.220	0.75	0.77	0.96	0.688	0.875
1504-06-06-FG	3/8-18	3/8-18	0.340	0.75	0.77	098	0.875	0.875
1504-06-08-FG	3/8-18	1/2-14	0.460	0.75	0.83	1.11	1.000	1.062
1504-08-06-FG	1/2-14	3/8-18	0.340	0.94	0.83	1.04	0.875	1.062
1504-08-08-FG	1/2-14	1/2-14	0.460	0.94	0.83	1.11	1.000	1.062
1504-12-08-FG	3/4-14	1/2-14	0.460	1.00	0.96	1.24	1.000	1.312
1504-12-12-FG	3/4-14	3/4-14	0.635	1.00	0.96	1.31	1.250	1.312
1504-16-12-FG	1-11 1/2	3/4-14	0.635	1.19	1.07	1.42	1.250	1.625
1504-16-16-FG	1-11 1/2	1-11 1/2	0.831	1.19	1.18	1.53	1.500	1.625
1504-20-20-FG	1-1/4-11 1/2	1-1/4-11 1/2	1.087	1.44	1.23	1.65	1.875	1.875
1504-24-24-FG	1-1/2-11 1/2	1-1/2-11 1/2	1.317	1.46	1.46	1.88	2.125	2.562

Tube Fittings & Adapters

MP-FPS-FPS Tee
1601 Series

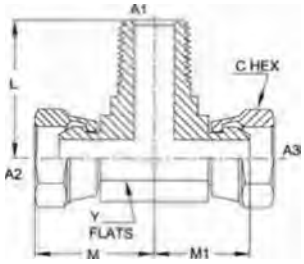

C-022

PART NO.SIZE	A1 NPTF	A2 NPSM	A3 NPSM	A1 DRILL	A2 DRILL	A3 DRILL	L LGTH	MI L6TH	M LGTH	C HEX	Y FLATS
1601-02-02-02-FG	1/8-27	1/8-27	1/8-27	0.188	0.150	0.150	0.72	0.70	0.84	0.562	0.438
1601-02-04-04-FG	1/8-27	1/4-18	1/4-18	0.188	0.220	0.220	0.90	0.88	1.07	0.562	0.562
1601-04-04-04-FG	1/4-18	1/4-18	1/4-18	0.281	0.220	0.220	1.09	0.88	1.07	0.688	0.562
1601-04-06-06-FG	1/4-18	3/8-18	3/8-18	0.281	0.340	0.340	1.22	0.99	1.20	0.688	0.750
1601-06-04-04-FG	3/8-18	1/4-18	1/4-18	0.406	0.220	0.220	1.22	0.99	1.18	0.875	0.750
1601-06-06-06-FG	3/8-18	3/8-18	3/8-18	0.406	0.340	0.340	1.22	0.99	1.20	0.875	0.750
1601-08-04-04-FG	1/2-14	1/4-18	1/4-18	0.531	0.220	0.220	1.47	1.02	1.21	1.000	0.875
1601-08-06-06-FG	1/2-14	3/8-18	3/8-18	0.531	0.340	0.340	1.47	1.04	1.25	1.000	0.875
1601-08-08-08-FG	1/2-14	1/2-14	1/2-14	0.531	0.460	0.460	1.47	1.11	1.39	1.000	0.875
1601-12-08-08-FG	3/4-14	1/2-14	1/2-14	0.719	0.460	0.460	1.59	1.24	1.52	1.250	1.062
1601-12-12-12-FG	3/4-14	3/4-14	3/4-14	0.719	0.635	0.635	1.59	1.30	1.65	1.250	1.062
1601-12-16-16-FG	3/4-14	1-11 1/2	1-11 1/2	0.719	0.831	0.831	1.78	1.54	1.89	1.250	1.312
1601-16-12-12-FG	1-11 1/2	3/4-14	3/4-14	0.938	0.635	0.635	1.97	1.43	1.78	1.500	1.312
1601-16-16-16-FG	1-11 1/2	1-11 1/2	1-11 1/2	0.938	0.831	0.831	1.97	1.54	1.89	1.500	1.312
1601-20-20-20-FG	1-1/4-11 1/2	1-1/4-11 1/2	1-1/4-11 1/2	1.250	1.087	1.087	2.38	1.73	2.15	1.875	1.625
1601-24-24-24-FG	1-1/2-11 1/2	1-1/2-11 1/2	1-1/2-11 1/2	1.500	1.317	1.317	2.64	1.89	2.31	2.125	1.875

FP-FPS-FPS Tee
1602 Series

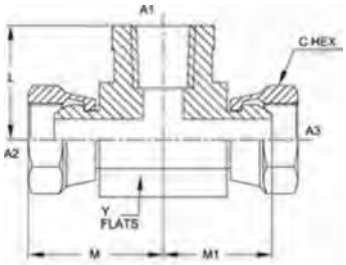

PART NO.SIZE	A1 NPTF	A2 NPSM	A3 NPSM	A2 DRILL	A3 DRILL	L LGTH	MI LGTH	M LGTH	C HEX	Y FLATS
1602-02-02-02-FG	1/8-27	1/8-27	1/8-27	0.150	0.150	0.66	0.80	0.94	0.562	0.562
1602-04-04-04-FG	1/4-18	1/4-18	1/4-18	0.220	0.220	0.88	0.99	1.18	0.688	0.750
1602-06-04-04-FG	3/8-18	1/4-18	1/4-18	0.220	0.220	1.02	1.04	1.23	0.875	0.875
1602-06-06-06-FG	3/8-18	3/8-18	3/8-18	0.340	0.340	1.02	1.06	1.27	0.875	0.875
1602-08-06-06-FG	1/2-14	3/8-18	3/8-18	0.340	0.340	1.23	1.17	1.38	1.000	1.062
1602-08-08-08-FG	1/2-14	1/2-14	1/2-14	0.460	0.460	1.23	1.24	1.52	1.000	1.062
1602-08-12-12-FG	1/2-14	3/4-14	3/4-14	0.635	0.635	1.23	1.24	1.59	1.000	1.062
1602-12-08-08-FG	3/4-14	1/2-14	1/2-14	0.460	0.460	1.36	1.47	1.75	1.250	1.312
1602-12-12-12-FG	3/4-14	3/4-14	3/4-14	0.635	0.635	1.36	1.47	1.82	1.250	1.312
1602-16-12-12-FG	1-11 1/2	3/4-14	3/4-14	0.635	0.635	1.62	1.62	1.97	1.500	1.625
1602-16-16-16-FG	1-11 1/2	1-11 1/2	1-11 1/2	0.831	0.831	1.62	1.73	2.08	1.500	1.625
1602-20-20-20-FG	1-1/4-11 1/2	1-1/4-11 1/2	1-1/4-11 1/2	1.087	1.087	1.70	1.83	2.25	1.875	1.875

FPS-FPS-FPS Tee
1603 Series

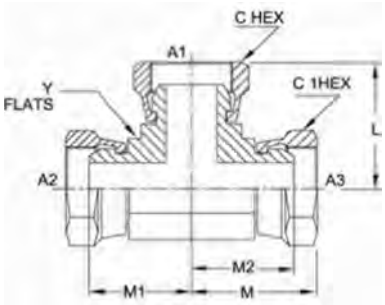

PART NO.SIZE	A1.A2 NPSM	A3 NPSM	A1.A2 DRILL	A3 DRILL	L LGTH	MI LGTH	M2 LGTH	M LGTH	C HEX	CI HEX	Y FLATS
1603-02-02-02-FG	1/8-27	1/8-27	0.150	0.150	084	0.70	0.70	0.84	0.562	0.562	0.438
1603-04-04-04-FG	1/4-18	1/4-18	0.220	0.220	1.07	0.88	0.88	1.07	0.688	0.688	0.562
1603-04-04-06-FG	1/4-18	3/8-18	0.220	0.340	1.16	0.99	0.97	1.20	0.688	0.875	0.750
1603-06-06-06-FG	3/8-18	3/8-18	0.340	0.340	1.20	0.99	0.99	1.20	0.875	0.875	0.750
1603-06-06-08-FG	3/8-18	1/2-14	0.340	0.460	1.25	1.04	1.11	1.39	0.875	1.000	0.750
1603-08-08-08-FG	1/2-14	1/2-14	0.460	0.460	1.39	1.11	1.11	1.39	1.000	1.000	0.750
1603-12-12-12-FG	3/4-14	3/4-14	0.635	0.635	1.65	1.30	1.30	1.65	1.250	1.250	1.062
1603-16-16-16-FG	1-11 1/2	1-11 1/2	0.831	0.831	1.89	1.54	1.54	1.89	1.500	1.500	1.312
1603-20-20-20-FG	1-1/4-11 1/2	1-1/4-11 1/2	1.087	1.087	2.15	1.73	1.73	2.15	1.875	1.875	1.625

MPS-FPS-FPS-FPS Cross
1604 Series

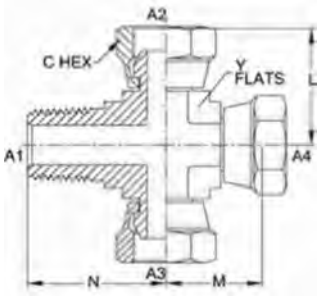

PART NO.SIZE	A1 NPTF	A2 NPSM	A3 NPSM	A4 NPSM	A1 DRILL	A2 DRILL	A3 DRILL	A4 DRILL	N LGTH	L LGTH	M LGTH	C HEX	Y FLATS
1604-04-04-04-04-FG	1/4-18	1/4-18	1/4-18	1/4-18	0.281	0.220	0.220	0.220	1.09	1.07	0.88	0.688	0.562

PL-FJS Straight
2111 Brass Series

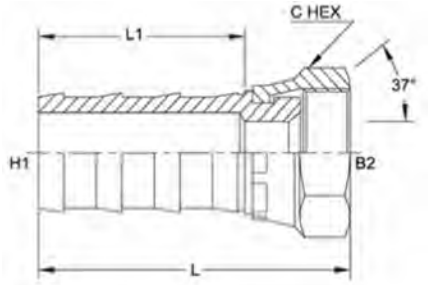

PART NO.SIZE	HI HOSE I.D.	B2 SAE37	L LOTH	LI LGTH	C HEX
2111-04-04-B	1/4	7/16-20	1.488	0.700	0.562
2111-04-05-B	1/4	1/2-20	1.560	0.700	0.625
2111-04-06-B	1/4	9/16-18	1.588	0.830	0.687
2111-05-05-B	5/16	1/2-20	1.580	0.830	0.625
2111-06-06-B	3/8	9/16-18	1.700	0.830	0.687
2111-06-08-B	3/8	3/4-16	1.780	0.930	0.875
2111-08-08-B	1/2	3/4-16	2.060	1.000	0.875
2111-08-10-B	1/2	7/8-14	1.840	0.930	1.000
2111-10-08-B	5/8	3/4-16	2.540	1.500	0.875
2111-10-10-B	5/8	7/8-14	2.700	1.500	0.875
2111-12-12-B	3/4	1-1/16-12	2.400	1.400	1.250

PL-FSAES Straight
2112 Brass Series

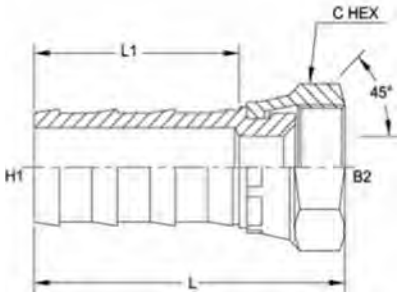

PART NO.SIZE	HI HOSE I.D.	B2 SAE45	LI LOTH	L LGTH	C HEX
2112-04-06-B	1/4	5/8-18	0.873	1.620	0.750
2112-05-06-B	5/16	5/8-18	0.876	1.606	0.750
2112-06-06-B	3/8	5/8-18	0.975	1.710	0.750
2112-08-06-B	1/2	5/8-18	1.000	1.930	0.750
2112-08-08-B	1/2	3/4-16			
2112-12-12-B	3/4	1-1/16-14	1.400	2.380	1.250

PL-MP Straight
2113 Brass Series

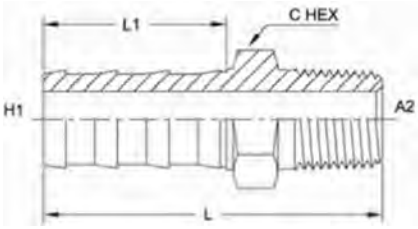

PART NO.SIZE	HI HOSE ID.	A2 NPTF	LI LGTH	L LGTH	C HEX
2113-04-02-B	1/4	1/8-27	0.700	1.290	0.438
2113-04-04-B	1/4	1/4-18	0.700	1.430	0.562
2113-04-06-B	1/4	3/8-18	0.700	1.430	0.687
2113-05-02-B	5/16	1/8-27	0.819	1.416	0.438
2113-05-04-B	5/16	1/4-18	0.871	1.660	0.562
2113-06-02-B	3/8	1/8-27	0.830	1.450	0.500
2113-06-04-B	3/8	1/4-18	0.830	1.550	0.562
2113-06-06-B	3/8	3/8-18	0.830	1.620	0.687
2113-06-08-B	3/8	1/2-14	0.830	1.670	0.875
2113-08-04-B	1/2	1/4-18	0.930	1.770	0.687
2113-08-06-B	1/2	3/8-18	1.000	1.810	0.687
2113-08-08-B	1/2	1/2-14	1.000	1.860	0.875
2113-08-12-B	1/2	3/4-14	0.930	1.970	1.062
2113-10-06-B	5/8	3/8-18	1.560	2.370	0.750
2113-10-08-B	5/8	1/2-14	1.500	2.550	0.875
2113-10-12-B	5/8	3/4-14	1.500	2.500	1.062
2113-12-08-B	3/4	1/2-14	1.500	2.450	0.875
2113-12-12-B	3/4	3/4-14	1.400	2.450	1.062

PL-FIF Straight
2114 Brass Series

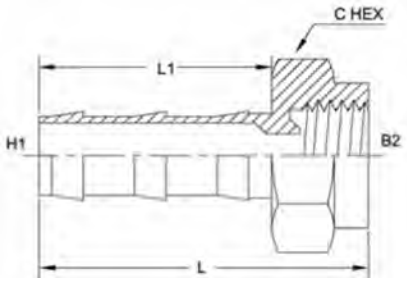

PART NO.SIZE	HI HOSE 1.0.	B2 NPTF	LI LGTH	L LGTH	C HEX
2114-04-03-B	1/4	3/8-24	0.760	1.170	0.438
2114-04-04-B	1/4	7/16-20	0.700	1.110	0.500
2114-04-05-B	1/4	1/2-20	0.700	1.570	0.562
2114-06-05-B	3/8	1/2-20	0.830	1.275	0.562
2114-06-06-B	3/8	5/8-18	0.830	1.330	0.750
2114-08-08-B	1/2	3/4-18			

Tube Fittings & Adapters

PL-MIFS Straight
2115 Brass Series

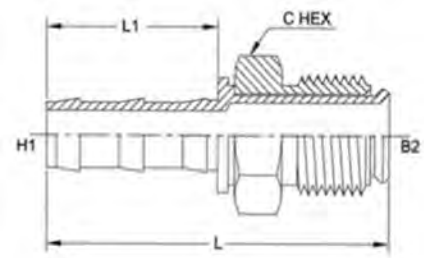

PART NO.SIZE	HI HOSE I.D.	B2 MALE SWIVEL	LI LOTH	L LOTH	C HEX
2115-04-03-B	1/4	3/8-24	0.700	1.392	0.375
2115-04-04-B	1/4	7/16-24	0.700	1.425	0.437
2115-04-05-B	1/4	1/2-20	0.700	1.520	0.500
2115-05-05-B	5/16	1/2-20	0.830	1.610	0.500
2115-06-05-B	3/8	1/2-20	0.830	1.650	0.500
2115-06-06-B	3/8	5/8-18	0.830	1.670	0.625
2115-06-08-B	3/8	3/4-16	0.830	1.800	0.750
2115-08-06-B	1/2	5/8-18	0.971	1.769	0.625
2115-08-08-B	1/2	3/4-16	1.000	1.960	0.750
2115-10-10-B	5/8	5/8-18	1.500	2.500	0.875

PL-SAE Straight
2116 Brass Series

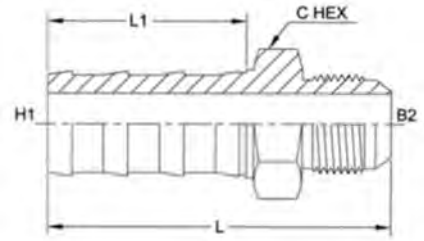

PART NO.SIZE	HI HOSE 1.0.	B2 SAE45	LI L6TH	L LOTH	C HEX
2116-04-04-B	1/4	7/16-20	0.742	1.435	0.438
2116-04-05-B	1/4	1/2-20	0.749	0.534	0.500
2116-06-05-B	3/8	1/2-20	0.866	1.646	0.500
2116-06-06-B	3/8	5/8-18	0.830	1.700	0.625
2116-08-06-B	1/2	5/8-18			
2116-08-08-B	1/2	3/4-16	1.000	2.050	0.750
2116-10-10-B	5/8	7/8-14			

PL-Stem Straight
2117 Brass Series

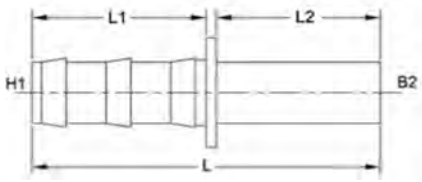

PART NO.SIZE	HI HOSE I.D.	B2 STEM	LI LGTH	L2 LGTH	I LGTH
2117-04-03-B	1/4	3/16	0.700	0.750	1.570
2117-04-04-B	1/4	1/4	0.700	0.800	1.615
2117-06-06-B	3/8	3/8	0.830	0.880	1.800
2117-08-08-B	1/2	1/2	1.020	0.986	2.110

PL-PL Straight
2118 Brass Series

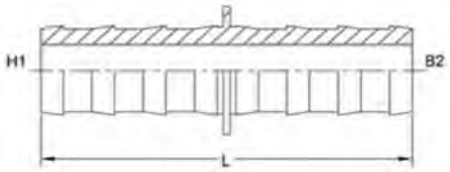

PART NO.SIZE	HI TUBE 1.0.	B2 TUBE 1.0.	L LGTH
2118-04-04-B	1/4	1/4	1.550
2118-05-05-B	5/16	5/16	1.800
2118-06-06-B	3/8	3/8	1.900
2118-08-08-B	1/2	1/2	2.000
2118-10-10-B	5/8	5/8	3.000
2118-12-12-B	3/4	3/4	3.000

Tube Fittings & Adapters

PL-FP Straight
2119 Brass Series

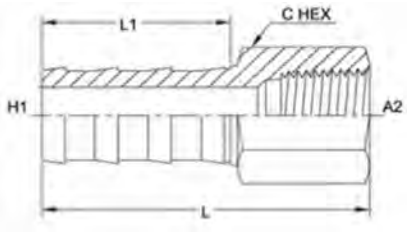

C-028

PART NO.SIZE	HI HOSE I.D.	A2 NPTF	LI L6TH	L L6TH	C HEX
2119-04-02-B	1/4	1/8-27	0.700	1.340	0.500
2119-04-04-B	1/4	1/4-18	0.700	1.410	0.625
2119-04-06-B	1/4	3/8-18			
2119-06-04-B	3/8	1/4-18	0.940	1.630	0.625
2119-06-06-B	3/8	3/8-18	0.830	1.530	0.812
2119-06-08-B	3/8	1/2-14			
2119-08-06-B	1/2	3/8-18	1.020	1.730	0.812
2119-08-08-B	1/2	1/2-14	0.925	1.750	0.938

PL-MP 90° Elbow
2120 Brass Series

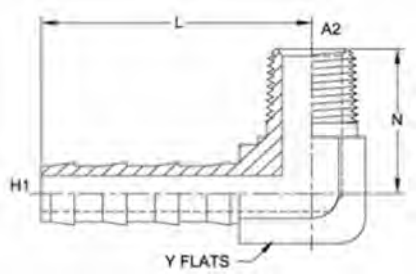

PART NO.SIZE	HI HOSE 1.0.	A2 NPTF	L LGTH	N LGTH	Y FLATS
2120-04-02-B	1/4	1/8-27	0.990	0.750	0.500
2120-04-04-B	1/4	1/4-18	1.010	0.900	0.562
2120-06-02-B	3/8	1/8-27	1.120	0.750	0.500
2120-06-04-B	3/8	1/4-18	1.140	0.908	0.562
2120-06-06-B	3/8	3/8-18	1.205	0.905	0.688
2120-06-08-B	3/8	1/2-14	1.310	1.185	0.875
2120-08-06-B	1/2	3/8-18	1.387	0.900	0.688
2120-08-08-B	1/2	1/2-14	1.490	1.180	0.875
2120-10-08-B	5/8	1/2-14	1.987	1.193	0.875
2120-12-12-B	3/4	3/4-14	2.070	1.270	1.062

MJ-MJ Straight
2403 Series

S A E # 070101 / MS# 51501

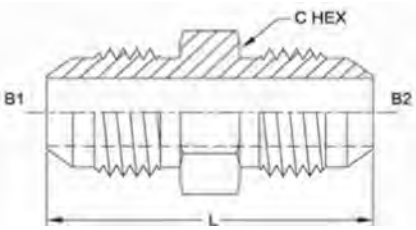

PART ND.SIZE	B1 TUBE O.D.	B2TUBE O.D.	B1 SAE 37	B2 SAE37	C HEX	B1 DRILL	B2 DRILL	I LOTH
2403-02-02	1/8	1/8	5/16-24	5/16-24	0.438	0.062	0.062	1.17
2403-03-02	3/16	3/16	3/8-24	5/16-24	0.438	0.125	0.062	1.20
2403-03-03	3/16	3/16	3/8-24	3/8-24	0.438	0.125	0.125	1.23
2403-04-02	1/4	1/8	7/16-20	5/16-24	0.500	0.172	0.062	1.27
2403-04-03	1/4	3/16	7/16-20	3/8-24	0.500	0.172	0.125	1.30
2403-04-04	1/4	1/4	7/16-20	7/16-20	0.500	0.172	0.172	1.37
2403-05-04	5/16	1/4	1/2-20	7/16-20	0.562	0.234	0.172	1.37
2403-05-05	5/16	5/16	1/2-20	1/2-20	0.562	0.234	0.234	1.37
2403-06-04	3/8	1/4	9/16-18	7/16-20	0.625	0.297	0.172	1.40
2403-06-05	3/8	5/16	9/16-18	1/2-20	0.625	0.297	0.234	1.40
2403-06-06	3/8	3/8	9/16-18	9/16-18	0.625	0.297	0.297	1.41
2403-08-04	1/2	1/4	3/4-16	7/16-20	0.812	0.391	0.172	1.51
2403-08-05	1/2	5/16	3/4-16	1/2-20	0.812	0.391	0.234	1.51
2403-08-06	1/2	3/8	3/4-16	9/16-18	0.812	0.391	0.297	1.52
2403-08-08	1/2	1/2	3/4-16	3/4-16	0.812	0.391	0.391	1.62
2403-10-04	5/8	1/4	7/8-14	7/16-20	0.937	0.484	0.172	1.67
2403-10-05	5/8	5/16	7/8-14	1/2-20	0.937	0.484	0.234	1.67
2403-10-06	5/8	3/8	7/8-14	9/16-18	0.937	0.484	0.297	1.68
2403-10-08	5/8	1/2	7/8-14	3/4-16	0.937	0.484	0.391	1.78
2403-10-10	5/8	5/8	7/8-14	7/8-14	0.937	0.484	0.484	1.88
2403-12-04	3/4	1/4	1-1/16-12	7/16-20	1.125	0.609	0.172	1.85
2403-12-05	3/4	5/16	1-1/16-12	1/2-20	1.125	0.609	0.234	1.85
2403-12-06	3/4	3/8	1-1/16-12	9/16-18	1.125	0.609	0.297	1.85
2403-12-08	3/4	1/2	1-1/16-12	3/4-16	1.125	0.609	0.391	1.95
2403-12-10	3/4	5/8	1-1/16-12	7/8-14	1.125	0.609	0.484	2.05
2403-12-12	3/4	3/4	1-1/16-12	1-1/16-12	1.125	0.609	0.609	2.16
2403-14-12	7/8	3/4	1-3/16-12	1-1/16-12	1.250	0.719	0.609	2.18
2403-14-14	7/8	7/8	1-3/16-12	1-3/16-12	1.250	0.719	0.719	2.21
2403-16-04	1	1/4	1-5/16-12	7/16-20	1.375	0.844	0.172	1.89
2403-16-06	1	3/8	1-5/16-12	9/16-18	1.375	0.844	0.297	1.89
2403-16-08	1	1/2	1-5/16-12	3/4-18	1.375	0.844	0.391	2.00
2403-16-10	1	5/8	1-5/16-12	7/8-14	1.375	0.844	0.484	2.10
2403-16-12	1	3/4	1-5/16-12	1-1/16-12	1.375	0.844	0.609	2.20
2403-16-14	1	7/8	1-5/16-12	1-3/16-12	1.375	0.844	0.719	2.23
2403-16-16	1	1	1-5/16-12	1-5/16-12	1.375	0.844	0.844	2.25
2403-20-12	1-1/4	3/4	1-5/8-12	1-1/16-12	1.688	1.078	0.609	2.34
2403-20-16	1-1/4	1	1-5/8-12	1-5/16-12	1.688	1.078	0.844	2.38
2403-20-20	1-1/4	1-1/4	1-5/8-12	1-5/8-12	1.688	1.078	1.078	2.43
2403-24-08	1-1/2	1/2	1-7/8-12	3/4-16	2.000	1.312	0.391	2.32
2403-24-10	1-1/2	7/8	1-7/8-12	7/8-14	2.000	1.312	0.484	2.42
2403-24-12	1-1/2	3/4	1-7/8-12	1-1/16-12	2.000	1.312	0.609	2.53
2403-24-16	1-1/2	1	1-7/8-12	1-5/16-12	2.000	1.312	0.844	2.58
2403-24-20	1-1/2	1-1/4	1-7/8-12	1-5/8-12	2.000	1.312	1.078	2.62
2403-24-24	1-1/2	1-1/2	1-7/8-12	1-7/8-12	2.000	1.312	1.312	2.75
2403-32-12	2	3/4	2-1/2-12	1-1/16-12	2.625	1.781	0.609	2.93
2403-32-16	2	1	2-1/2-12	1-5/16-12	2.625	1.781	0.844	2.98
2403-32-20	2	1-1/4	2-1/2-12	1-5/16-12	2.625	1.781	1.078	3.02
2403-32-24	2	1-1/2	2-1/2-12	1-7/8-1/2	2.625	1.781	1.312	3.15
2403-32-32	2	2	2-1/2-12	2-1/2-12	2.625	1.781	1.781	3.40
2403-40-40	2-1/2	2-1/2	3-12	3-12	3.250	2.318	2.318	2.95
2403-48-48	3	3	3-1/2-12	3-1/2-12	3.750	2.818	2.818	3.40

MJ-MJ Straight Large Hex 2403-LH Series

SAE# 070119 / MS# 51519

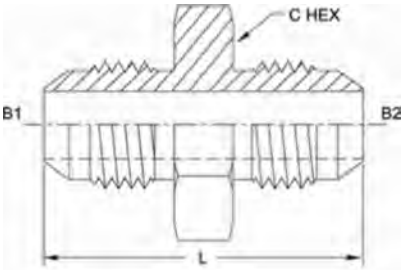

PART NO.SIZE	B1 TUBE O.D.	B2 TUBE O.D.	B1 SAE37	B2 SAE37	B1 DRILL	B2 DRILL	L LGTH	C HEX
2403-LH-02-02	1/8	1/8	5/16-24	5/16-24	0.062	0.062	1.17	0.562
2403-LH-03-02	3/16	1/8	3/8-24	5/16-24	0.125	0.062	1.20	0.625
2403-LH-03-03	3/16	3/16	3/8-24	3/8-24	0.125	0.125	1.23	0.625
2403-LH-04-02	1/4	1/8	7/16-20	5/16-24	0.172	0.062	1.27	0.688
2403-LH-04-03	1/4	3/16	7/16-20	3/8-24	0.172	0.125	1.30	0.688
2403-LH-04-04	1/4	1/4	7/16-20	7/16-20	0.172	0.172	1.37	0.688
2403-LH-05-04	5/16	1/4	1/2-20	7/16-20	0.234	0.172	1.37	0.750
2403-LH-05-05	5/16	5/16	1/2-20	1/2-20	0.234	0.234	1.37	0.750
2403-LH-06-04	3/8	1/4	9/16-18	7/16-20	0.297	0.172	1.40	0.812
2403-LH-06-05	3/8	5/16	9/16-18	1/2-20	0.297	0.234	1.40	0.812
2403-LH-06-06	3/8	3/8	9/16-18	9/16-18	0.297	0.297	1.41	0.812
2403-LH-08-04	1/2	1/4	3/4-16	7/16-20	0.391	0.172	1.51	1.000
2403-LH-08-05	1/2	5/16	3/4-16	1/2-20	0.391	0.234	1.51	1.000
2403-LH-08-06	1/2	3/8	3/4-16	9/16-18	0.391	0.297	1.52	1.000
2403-LH-08-08	1/2	1/2	3/4-16	3/4-16	0.391	0.391	1.62	1.000
2403-LH-10-04	5/8	1/4	7/8-14	7/16-20	0.484	0.172	1.67	1.125
2403-LH-10-06	5/8	3/8	7/8-14	9/16-18	0.484	0.297	1.68	1.125
2403-LH-10-08	5/8	1/2	7/8-14	3/4-16	0.484	0.391	1.78	1.125
2403-LH-10-10	5/8	5/8	7/8-14	7/8-14	0.484	0.484	1.88	1.125
2403-LH-12-04	3/4	1/4	1-1/16-12	7/16-20	0.609	0.172	1.85	1.375
2403-LH-12-05	3/4	5/16	1-1/16-12	1/2-20	0.609	0.234	1.85	1.375
2403-LH-12-06	3/4	3/8	1-1/16-12	9/16-18	0.609	0.297	1.85	1.375
2403-LH-12-08	3/4	1/2	1-1/16-12	3/4-16	0.609	0.391	1.95	1.375
2403-LH-12-10	3/4	5/8	1-1/16-12	7/8-14	0.609	0.484	2.05	1.375
2403-LH-12-12	3/4	3/4	1-1/16-12	1-1/16-12	0.609	0.609	2.16	1.375
2403-LH-14-14	7/8	7/8	1-3/16-12	1-3/16-12	0.719	0.719	2.21	1.500
2403-LH-16-04	1	1/4	1-5/16-12	7/16-20	0.844	0.172	1.89	1.625
2403-LH-16-08	1	1/2	1-5/16-12	3/4-16	0.844	0.391	2.00	1.625
2403-LH-16-10	1	5/8	1-5/16-12	7/8-14	0.844	0.484	2.10	1.625
2403-LH-16-12	1	3/4	1-5/16-12	1-1/16-12	0.844	0.609	2.20	1.625
2403-LH-16-16	1	1	1-5/16-12	1-5/16-12	0.844	0.844	2.25	1.625
2403-LH-20-04	1-1/4	1/4	1-5/8-12	7/16-20	1.078	0.172	2.02	1.875
2403-LH-20-10	1-1/4	5/8	1-5/8-12	7/8-14	1.078	0.484	2.23	1.875
2403-LH-20-12	1-1/4	3/4	1-5/8-12	1-1/16-12	1.078	0.609	2.34	1.875
2403-LH-20-16	1-1/4	1	1-5/8-12	1-5/16-12	1.078	0.844	2.38	1.875
2403-LH-20-20	1-1/4	1-1/4	1-5/8-12	1-5/8-12	1.078	1.078	2.43	1.875
2403-LH-24-16	1-1/2	1	1-7/8-12	1-5/16-12	1.312	0.844	2.58	2.125
2403-LH-24-20	1-1/2	1-1/4	1-7/8-12	1-5/8-12	1.312	1.078	2.62	2.125
2403-LH-24-24	1-1/2	1-1/2	1-7/8-12	1-7/8-12	1.312	1.312	2.75	2.125
2403-LH-32-32	2	2	2-1/2-12	2-1/2-12	1.781	1.781	3.40	2.750

MJ-MP Straight
2404 Series

SAE# 070102 / MS# 51500

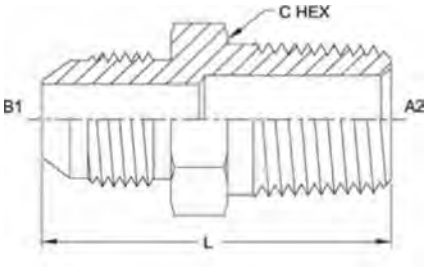

PART NO.SIZE	TUBE O.D.	B1 SAE 37	A2 NPTF	B1 DRILL	A2 DRILL	I LGTH	C HEX
2404-02-01	1/8	5/16-24	1/16-27				
2404-02-02	1/8	5/16-24	1/8-27	0.062	0.188	1.11	0.438
2404-02-04	1/8	5/16-24	1/4-18	0.062	0.281	1.32	0.625
2404-03-02	3/16	3/8-24	1/8-27	0.125	0.188	1.14	0.438
2404-03-04	3/16	3/8-24	1/4-18	0.125	0.281	1.35	0.625
2404-04-01	1/4	7/16-20	1/16-27	0.172	0.117	1.22	0.500
2404-04-02	1/4	7/16-20	1/8-27	0.172	0.188	1.22	0.500
2404-04-04	1/4	7/16-20	1/4-18	0.172	0.281	1.42	0.625
2404-04-06	1/4	7/16-20	3/8-18	0.172	0.406	1.42	0.812
2404-04-08	1/4	7/16-20	1/2-14	0.172	0.531	1.68	0.875
2404-04-12	1/4	7/16-20	3/4-14	0.172	0.719	1.75	1.125
2404-05-02	5/16	1/2-20	1/8-27	0.234	0.188	1.22	0.562
2404-05-04	5/16	1/2-20	1/4-18	0.234	0.281	1.42	0.625
2404-05-06	5/16	1/2-20	3/8-18	0.234	0.406	1.42	0.812
2404-05-08	5/16	1/2-20	1/2-14	0.234	0.531	1.68	0.875
2404-06-02	3/8	9/16-18	1/8-27	0.297	0.188	1.24	0.625
2404-06-04	3/8	9/16-18	1/4-18	0.297	0.281	1.43	0.625
2404-06-06	3/8	9/16-18	3/8-18	0.297	0.406	1.43	0.812
2404-06-08	3/8	9/16-18	1/2-14	0.297	0.531	1.69	0.875
2404-06-12	3/8	9/16-18	3/4-14	0.297	0.719	1.75	1.125
2404-06-16	3/8	9/16-18	1-11-1/2	0.297	0.938	1.94	1.375
2404-08-02	1/2	3/4-16	1/8-27	0.391	0.188	1.34	0.812
2404-08-04	1/2	3/4-16	1/4-18	0.391	0.281	1.53	0.812
2404-08-06	1/2	3/4-16	3/8-18	0.391	0.406	1.53	0.812
2404-08-08	1/2	3/4-16	1/2-14	0.391	0.531	1.79	0.937
2404-08-12	1/2	3/4-16	3/4-14	0.391	0.719	1.85	1.125
2404-08-16	1/2	3/4-16	1-11-1/2	0.391	0.938	2.05	1.375
2404-10-04	5/8	7/8-14	1/4-18	0.484	0.281	1.70	0.937
2404-10-06	5/8	7/8-14	3/8-18	0.484	0.406	1.70	0.937
2404-10-08	5/8	7/8-14	1/2-14	0.484	0.531	1.89	0.937
2404-10-12	5/8	7/8-14	3/4-14	0.484	0.719	1.95	1.125
2404-10-16	5/8	7/8-14	1-11-1/2	0.484	0.938	2.15	1.375
2404-10-20	5/8	7/8-14	1-1/4-11-1/2	0.484	1.250	2.25	1.688

Continued on next page

Tube Fittings & Adapters

2404 SONGS continued

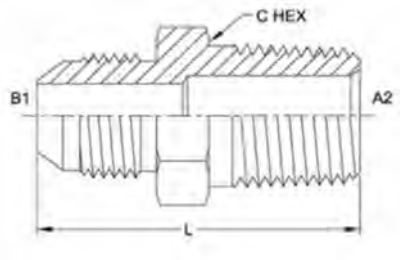

C-032

PART NO.SIZE	TUBE O.D.	B1 SAE37	A2 NPTF	B1 DRILL	A2 DRILL	L LGTH	C HEX
2404-12-04	3/4	1-1/16-12	1/4-18	0.609	0.281	1.87	1.125
2404-12-06	3/4	1-1/16-12	3/8-18	0.609	0.406	1.87	1.125
2404-12-08	3/4	1-1/16-12	1/2-14	0.609	0.531	2.06	1.125
2404-12-12	3/4	1-1/16-12	3/4-14	0.609	0.719	2.06	1.125
2404-12-16	3/4	1-1/16-12	1-11-1/2	0.609	0.938	2.25	1.375
2404-12-20	3/4	1-1/16-12	1-1/4-11-1/2	0.609	1.250	2.36	1.688
2404-12-24	3/4	1-1/16-12	1-1/2-11-1/2	0.609	1.500	2.46	2.000
2404-14-08	7/8	1-3/16-12	1/2-14	0.719	0.531	2.09	1.250
2404-14-12	7/8	1-3/16-12	3/4-14	0.719	0.719	2.09	1.250
2404-14-16	7/8	1-3/16-12	1-11-1/2	0.719	0.938	2.28	1.375
2404-16-06	1	1-5/16-12	3/8-18	0.844	0.406	1.92	1.375
2404-16-08	1	1-5/16-12	1/2-14	0.844	0.531	2.11	1.375
2404-16-12	1	1-5/16-12	3/4-14	0.844	0.719	2.11	1.375
2404-16-16	1	1-5/16-12	1-11-1/2	0.844	0.938	2.30	1.375
2404-16-20	1	1-5/16-12	1-1/4-11-1/2	0.844	1.250	2.40	1.688
2404-16-24	1	1-5/16-12	1-1/2-11-1/2	0.844	1.500	2.51	2.000
2404-16-32	1	1-5/16-12	2-11-1/2	0.844	1.938	2.69	2.625
2404-20-12	1-1/4	1-5/8-12	3/4-14	1.078	0.719	2.23	1.688
2404-20-16	1-1/4	1-5/8-12	1-11-1/2	1.078	0.938	2.42	1.688
2404-20-20	1-1/4	1-5/8-12	1-1/4-11-1/2	1.078	1.250	2.45	1.688
2404-20-24	1-1/4	1-5/8-12	1-1/2-11-1/2	1.078	1.500	2.55	2.000
2404-20-32	1-1/4	1-5/8-12	2-11-1/2	1.078	1.938	2.73	2.625
2404-20-40	1-1/4	1-5/8-12	2-1/2 - 8	1.078	2.318	3.20	3.250
2404-24-16	1-1/2	1-7/8-12	1-11-1/2	1.312	0.938	2.62	2.000
2404-24-20	1-1/2	1-7/8-12	1-1/4-11-1/2	1.312	1.250	2.65	2.000
2404-24-24	1-1/2	1-7/8-12	1-1/2-11-1/2	1.312	1.500	2.68	2.000
2404-24-32	1-1/2	1 7/8-12	2-11 1/2	1.312	1.938	2.86	2.625
2404-32-16	2	2-1/2-12	1-11 1/2	1.781	0.938	3.02	2.625
2404-32-20	2	2-1/2-12	1 1/4-11 1/2	1.781	1.250	3.05	2.625
2404-32-24	2	2-1/2-12	1 1/2-11 1/2	1.781	1.500	3.08	2.625
2404-32-32	2	2-1/2-12	2-11 1/2	1.781	1.938	3.11	2.625
2404-32-40	2	2-1/2-12	2-1/2 - 8	1.781	2.318	3.48	3.250
2404-32-48	2	2-1/2-13	3-8	1.781	2.818	3.74	3.750
2404-40-32	2-1/2	3-12	2-11-1/2	2.318	1.938	2.90	3.250
2404-40-40	2-1/2	3-12	2-1/2 - 8	2.318	2.318	3.37	3.250
2404-48-48	3	3-1/2-12	3-8	2.818	2.818	3.50	3.750

MJ-MP Straight Long
2404-L Series

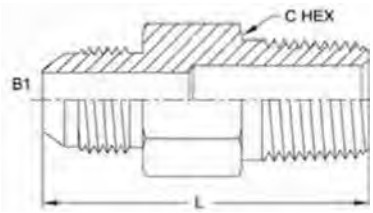

C-033

PART NO.SIZE	TUBE O.D.	B1 SAE37	A2 NPTF	B1 DRILL	A2 DRILL	L LGTH	C HEX
2404-L-04-02	1/4	7/16-20	1/8-27	0.172	0.188	1.81	0.500
2404-L-04-04	1/4	7/16-20	1/4-18	0.172	0.281	2.25	0.625
2404-L-05-02	5/16	1/2-20	1/8-27	0.234	0.188	1.94	0.562
2404-L-05-04	5/16	1/2-20	1/4-18	0.234	0.281	2.25	0.625
2404-L-06-02	3/8	9/16-18	1/8-27	0.297	0.188	2.20	0.625
2404-L-06-04	3/8	9/16-18	1/4-18	0.297	0.281	2.25	0.625
2404-L-06-06	3/8	9/16-18	3/8-18	0.297	0.406	2.50	0.812
2404-L-06-08	3/8	9/16-18	1/2-14	0.297	0.531	2.95	0.875
2404-L-08-04	1/2	3/4-16	1/4-18	0.391	0.281	2.75	0.812
2404-L-08-06	1/2	3/4-16	3/8-18	0.391	0.406	2.75	0.812
2404-L-08-08	1/2	3/4-16	1/2-14	0.391	0.531	3.04	0.875
2404-L-10-06	5/8	7/8-14	3/8-18	0.484	0.406	2.94	0.937
2404-L-10-08	5/8	7/8-14	1/2-14	0.484	0.531	3.13	0.937
2404-L-12-12	3/4	1-1/16-12	3/4-14	0.609	0.719	3.50	1.125
2404-L-16-12	1	1-5/16-12	3/4-14	0.844	0.719	3.81	1.375
2404-L-16-16	1	1-5/16-12	1-11 1/2	0.844	0.938	4.00	1.375
2404-L-20-20	1-1/4	1-5/8-12	1-1/4-11 1/2	1.078	1.250	4.50	1.688
2404-L-24-24	1-1/2	1-7/8-12	1-1/2-11 1/2	1.312	1.500	4.88	2.000
2404-L-32-32	2	2-1/2-12	2-11 1/2	1.781	1.938	5.62	2.625

MJ-MP Straight
X-Long 2404-LL Series

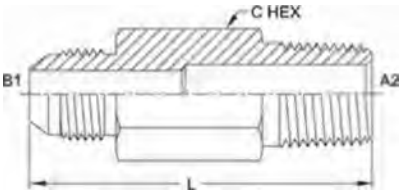

PART NO.SIZE	TUBE O.D.	B1 SAE37	A2 NPTF	B1 DRILL	A2 DRILL	L LGTH	C HEX
2404-LL-04-02	1/4	7/16-20	1/8-27	0.172	0.188	2.56	0.500
2404-LL-04-04	1/4	7/16-20	1/4-18	0.172	0.281	3.25	0.625
2404-LL-05-02	5/16	1/2-20	1/8-27	0.234	0.188	2.81	0.562
2404-LL-06-04	3/8	9/16-18	1/4-18	0.297	0.281	3.25	0.625
2404-LL-06-06	3/8	9/16-18	3/8-18	0.297	0.406	3.92	0.812
2404-LL-08-06	1/2	3/4-16	3/8-18	0.391	0.406	4.00	0.812
2404-LL-08-08	1/2	3/4-16	1/2-14	0.391	0.531	4.20	0.875
2404-LL-10-08	5/8	7/8-14	1/2-14	0.484	0.531	4.38	0.937
2404-LL-12-12	3/4	1-1/16-12	3/4-14	0.609	0.719	5.00	1.125
2404-LL-16-12	1	1-5/16-12	3/4-14	0.844	0.719	5.56	1.375
2404-LL-16-16	1	1-5/16-12	1-11 1/2	0.844	0.938	5.75	1.375

Tube Fittings & Adapters

MJ-FP Straight
2405 Series

SAE# 070103 / MS# 51503

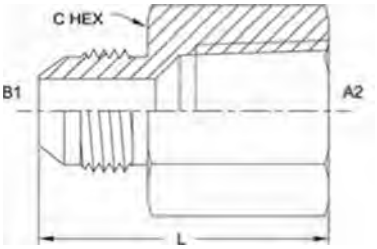

C-034

PART NO.SIZE	TUBE O.D.	B1 SAE37	A2 NPTF	B1 DRILL	L LGTH	C HEX
2405-02-02	1/8	5/16-24	1/8-27	0.062	1.12	0.562
2405-03-02	3/16	3/8-24	1/8-27	0.125	1.13	0.562
2405-03-04	3/16	3/8-24	1/4-18	0.125	1.32	0.750
2405-04-02	1/4	7/16-20	1/8-27	0.172	1.19	0.562
2405-04-04	1/4	7/16-20	1/4-18	0.172	1.39	0.750
2405-04-06	1/4	7/16-20	3/8-18	0.172	1.45	0.875
2405-04-08	1/4	7/16-20	1/2-14	0.172	1.68	1.125
2405-05-02	5/16	1/2-20	1/8-27	0.234	1.17	0.562
2405-05-04	5/16	1/2-20	1/4-18	0.234	1.39	0.750
2405-05-06	5/16	1/2-20	3/8-18	0.234	1.06	0.875
2405-06-02	3/8	9/16-18	1/8-27	0.297	1.19	0.625
2405-06-04	3/8	9/16-18	1/4-18	0.297	1.40	0.750
2405-06-06	3/8	9/16-18	3/8-18	0.297	1.46	0.875
2405-06-08	3/8	9/16-18	1/2-14	0.297	1.69	1.125
2405-06-12	3/8	9/16-18	3/4-14	0.297	1.75	1.375
2405-08-04	1/2	3/4-16	1/4-18	0.391	1.55	0.875
2405-08-06	1/2	3/4-16	3/8-18	0.391	1.56	0.875
2405-08-08	1/2	3/4-16	1/2-14	0.391	1.79	1.125
2405-08-12	1/2	3/4-16	3/4-14	0.391	1.85	1.375
2405-08-16	1/2	3/4-16	1-11 1/2	0.391	2.10	1.625
2405-10-04	5/8	7/8-14	1/4-18	0.484	1.66	0.937
2405-10-06	5/8	7/8-14	3/8-18	0.484	1.67	0.937
2405-10-08	5/8	7/8-14	1/2-14	0.484	1.89	1.125
2405-10-12	5/8	7/8-14	3/4-14	0.484	1.95	1.375
2405-10-16	5/8	7/8-14	1-11 1/2	0.484	2.20	1.625
2405-12-08	3/4	1-1/16-12	1/2-14	0.609	2.05	1.375
2405-12-12	3/4	1-1/16-12	3/4-14	0.609	2.06	1.375
2405-12-16	3/4	1-1/16-12	1-11 1/2	0.609	2.30	1.625
2405-14-08	7/8	1-3/16-12	1/2-14	0.719	2.05	1.375
2405-14-12	7/8	1-3/16-12	3/4-14	0.719	2.06	1.375
2405-16-12	1	1-5/16-12	3/4-14	0.844	2.12	1.375
2405-16-16	1	1-5/16-12	1-11 1/2	0.844	2.35	1.625
2405-16-20	1	1-5/8-12	1-1/4-11 1/2	0.844	2.44	2.000
2405-20-16	1-1/4	1-5/8-12	1-11 1/2	1.078	2.47	2.000
2405-20-20	1-1/4	1-5/8-12	1-1/4-11 1/2	1.078	2.49	2.000
2405-20-24	1-1/4	1-5/8-12	1-1/2-11 1/2	1.078	2.49	2.375
2405-24-16	1-1/2	1-7/8-12	1-11 1/2	1.312	2.60	2.375
2405-24-20	1-1/2	1-7/8-12	1-1/4-11 1/2	1.312	2.62	2.375
2405-24-24	1-1/2	1-7/8-12	1-1/2-11 1/2	1.312	2.62	2.375
2405-24-32	1-1/2	1-7/8-12	2-11-1/2	1.312	2.72	2.875
2405-32-24	2	2-1/2-12	1-1/2-11 1/2	1.781	2.95	2.875
2405-32-32	2	2-1/2-12	2-11 1/2	1.781	2.97	2.875

FJ-MJ Straight Reducer
2406 Series

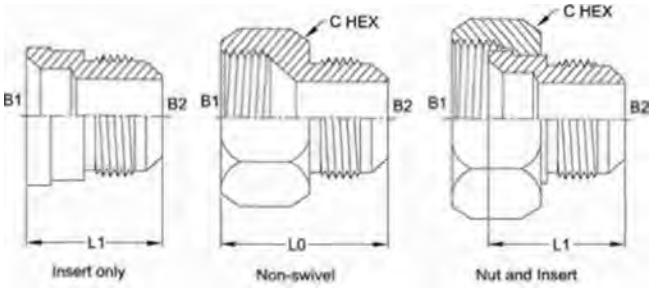

PART NO. Insert only	PART NO. Non-swivel	PART NO. Nut and Insert	B1 TUBE O.D	B2 TUBE 0.0	B1 SAE37	B2 SAE37	LI LOTH	LU LGTH	C HEX
–	2406-03-04	-	3/16	1/4	3/8-24	7/16-20	--	1.11	0.500
2406-04-02-IN	2406-04-02	2406-04-02-2PC	1/4	1/8	7/16-20	5/16-24	0.75	1.04	0.563
-	2406-04-03	-	1/4	3/16	7/16-20	3/8-24	-	1.07	0.563
-	2406-04-04	-	1/4	1/4	7/16-20	7/16-20	-	1.14	0.563
-	2406-04-05	-	1/4	5/16	7/16-20	1/2-20	-	1.14	0.563
-	2406-04-06	-	1/4	3/8	7/16-20	9/16-18	-	1.15	0.625
	2406-04-08	--	1/4	1/2	7/16-20	3/4-16	-	1.25	0.625
-	2406-05-04		5/16	1/4	1/2-20	7/16-20	-	1.16	0.625
-	2406-05-06		5/16	3/8	1/2-20	9/16-18	-	1.17	0.625
-	2406-05-08	-	5/16	1/2	1/2-20	3/4-16	-	1.27	0.812
2406-06-02-IN	2406-06-02	2406-06-02-2 PC	3/8	1/8	9/16-18	5/16-24	0.87	1.07	0.688
2406-06-03-IN	2406-06-03	2406-06-03-2PC	3/8	3/16	9/16-18	3/8-24	0.90	1.10	0.688
2406-06-04-IN	2406-06-04	2406-06-04-2 PC	3/8	1/4	9/16-18	7/16-20	0.97	1.17	0.688
	2406-06-05	-	3/8	5/16	9/16-18	1/2-20	-	1.18	0.688
-	2406-06-06		3/8	3/8	9/16-18	9/16-18	-	1.18	0.688
	2406-06-08	-	3/8	1/2	9/16-18	3/4-16	-	1.28	0.812
	2406-06-10	-	3/8	5/8	9/16-18	7/8-14		1.38	0.937
2406-08-04-IN	2406-08-04	2406-08-04-2PC	1/2	1/4	3/4-16	7/16-20	1.00	1.30	0.875
2406-08-05-IN	2406-08-05	2406-08-05-2PC	1/2	5/16	3/4-16	1/2-20	1.00	1.30	0.875
2406-08-06-IN	2406-08-06	2406-08-06-2PC	1/2	3/8	3/4-16	9/16-18	1.00	1.31	0.875
-	2406-08-08	-	1/2	1/2	3/4-16	3/4-16	-	1.41	0.875
--	2406-08-10	-	1/2	5/8	3/4-16	7/8-14	--	1.51	0.937
-	2406-08-12	-	1/2	3/4	3/4-16	1-1/16-12	-	1.61	1.125
2406-10-04-IN	2406-10-04	2406-10-04-2PC	5/8	1/4	7/8-14	7/16-20	1.03	1.39	1.000
-	2406-10-05	-	5/8	5/8	7/8-14	1/2-20	1.03	1.39	1.000
2406-10-06-IN	2406-10-06	2406-10-06-2PC	5/8	3/8	7/8-14	9/16-18	1.03	1.40	1.000
-	2406-10-08	-	5/8	1/2	7/8-14	3/4-16	-	1.50	1.000
--	2406-10-12	-	5/8	3/4	7/8-14	1-1/16-12	-	1.71	1.125
-	2406-10-16	-	5/8	1	7/8-14	1-5/16-12	-	1.76	1.375
2406-12-04-IN	2406-12-04	2406-12-04-2PC	3/4	1/4	1-1/16-12	7/16-20	1.09	1.46	1.250
2406-12-06-IN	2406-12-06	2406-12-06-2PC	3/4	3/8	1-1/16-12	9/16-18	1.09	1.46	1.250
2406-12-08-IN	2406-12-08	2406-12-08-2PC	3/4	1/2	1-1/16-12	3/4-16	1.19	1.56	1.250
-	2406-12-10	-	3/4	5/8	1-1/16-12	7/8-14	-	1.66	1.250
-	2406-12-12	-	3/4	3/4	1-1/16-12	1-1/16-12	-	1.77	1.250
-	2406-12-16	-	3/4	1	1-1/16-12	1-5/16-12	-	1.82	1.375
2406-14-04-IN	2406-14-04	2406-14-04-2PC	7/8	1/4	1-3/16-12	7/16-20	1.12	1.52	1.375

Continued on next page

Tube Fittings & Adapters

2406 Series continued

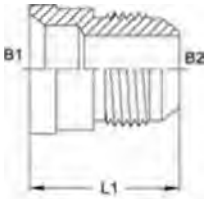

Insert only

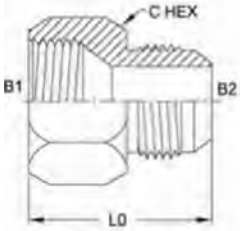

Non-swivel

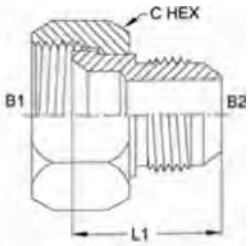

Nut and Insert

C-036

PART NO. Insert only	PART NO. Non-swivel	PART NO. Nut and Insert	B1 TUBE 0.0	B2 TUBE 0.0	B1 SAE37	82 SAE37	LI LOTH	LO LOTH	C HEX
2406-14-06-IN	2406-14-06	2406-14-06-2PC	7/8	3/8	1-3/16-12	9/16-18	1.13	1.53	1.375
2406-14-08-IN	2406-14-08	2406-14-08-2PC	7/8	1/2	1-3/16-12	3/4-16	1.23	1.63	1.375
2406-14-10-IN	2406-14-10	2406-14-10-2PC	7/8	5/8	1-3/16-12	7/8-14	1.33	1.73	1.375
-	2406-14-12	-	7/8	3/4	1-3/16-12	1-1/16-12	-	1.83	1.375
-	2406-14-16	-	7/8	1	1-3/16-12	1-5/16-12	-	1.88	1.375
2406-16-04-IN	2406-16-04	2406-16-04-2 PC	1	1/4	1-5/16-12	7/16-20	1.22	1.57	1.500
2406-16-06-IN	2406-16-06	2406-16-06-2PC	1	3/8	1-5/16-12	9/16-18	1.22	1.57	1.500
2406-16-08-IN	2406-16-08	2406-16-08-2PC	1	1/2	1-5/16-12	3/4-16	1.27	1.67	1.500
2406-16-10-IN	2406-16-10	2406-16-10-2PC	1	5/8	1-5/16-12	7/8-14	1.38	1.77	1.500
2406-16-12-IN	2406-16-12	2406-16-12-2PC	1	3/4	1-5/16-12	1-1/16-12	1.47	1.88	1.500
-	2406-16-14	-	1	7/8	1-5/16-12	1-3/16-12	-	1.91	1.500
-	2406-16-20	-	1	1-1/4	1-5/16-12	1-5/8-12	-	1.97	1.688
-	2406-16-24	"	1	1-1/2	1-5/16-12	1-7/8-12	-	2.10	2.000
2406-20-06-1N	2406-20-06	2406-20-06-2PC	1-1/4	3/8	1-5/8-12	9/16-18	1.22	1.67	2.000
2406-20-08-1N	2406-20-08	2406-20-08-2PC	1-1/4	1/2	1-5/8-12	3/4-16	1.32	1.72	2.000
2406-20-10-IN	2406-20-10	2406-20-10-2PC	1-1/4	5/8	1-5/8-12	7/8-14	1.42	1.82	2.000
2406-20-12-IN	2406-20-12	2406-20-12-2PC	1-1/4	3/4	1-5/8-12	1-1/16-12	1.53	1.93	2.000
2406-20-14-IN	2406-20-14	2406-20-14-2PC	1-1/4	7/8	1-5/8-12	1-3/16-12	1.57	1.95	2.000
2406-20-16-IN	2406-20-16	2406-20-16-2PC	1-1/4	1	1-5/8-12	1-5/16-12	1.59	1.97	2.000
—	2406-20-24	—	1-1/4	1-1/2	1-5/8-12	1-7/8-12	–	2.15	2.000
2406-24-08-1N	2406-24-08	2406-24-08-2PC	1-1/2	1/2	1-7/8-12	3/4-16	1.56	1.85	2.250
2406-24-10-IN	2406-24-10	2406-24-10-2PC	1-1/2	5/8	1-7/8-12	7/8-14	1.56	1.95	2.250
2406-24-12-IN	2406-24-12	2406-24-12-2PC	1-1/2	3/4	1-7/8-12	1-1/16-12	1.63	2.05	2.250
2406-24-14-IN	2406-24-14	2406-24-14-2PC	1-1/2	7/8	1-7/8-12	1-3/16-12	1.63	2.08	2.250
2406-24-16-IN	2406-24-16	2406-24-16-2PC	1-1/2	1	1-7/8-12	1-5/16-12	1.63	2.10	2.250
2406-24-20-1N	2406-24-20	2406-24-20-2PC	1-1/2	1-1/4	1-7/8-12	1-5/8-12	1.69	2.15	2.250
-	2406-24-32		1-1/2	2	1-7/8-12	2-1/2-12	-	2.52	2.625
2406-32-08-IN	2406-32-08	2406-32-08-2PC	2	1/2	2-1/2-12	3/4-16	1.48	2.10	2.875
2406-32-12-IN	2406-32-12	2406-32-12-2PC	2	3/4	2-1/2-12	1-1/16-12	1.69	2.30	2.875
2406-32-16-IN	2406-32-16	2406-32-16-2PC	2	1	2-1/2-12	1-5/16-12	1.74	2.35	2.875
2406-32-20-1N	2406-32-20	2406-32-20-2PC	2	1-1/4	2-1/2-12	1-5/8-12	1.78	2.40	2.875
2406-32-24-IN	2406-32-24	2406-32-24-2PC	2	1-1/2	2-1/2-12	1-7/8-12	1.91	2.52	2.875

MJ Plug
2408 Series

SAE# 070109 / MS# 51518

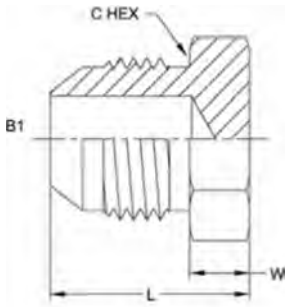

PART NO.SIZE	TUBE O.D.	B1 SAE 37	L LEITH	W WIDTH	C HEX
2408-02	1/8	5/16-24	0.70	0.22	0.438
2408-03	3/16	3/8-24	0.73	0.22	0.438
2408-04	1/4	7/16-20	0.80	0.22	0.500
2408-05	5/16	1/2-20	0.80	0.22	0.562
2408-06	3/8	9/16-18	0.84	0.25	0.625
2408-08	1/2	3/4-16	0.94	0.25	0.812
2408-10	5/8	7/8-14	1.10	0.31	0.937
2408-12	3/4	1-1/16-12	1.28	0.38	1.125
2408-14	7/8	1-3/16-12	1.31	0.38	1.250
2408-16	1	1-5/16-12	1.33	0.38	1.375
2408-20	1-1/4	1-5/8-12	1.45	0.46	1.688
2408-24	1-1/2	1-7/8-12	1.65	0.53	2.000
2408-32	2	2-1/2-12	2.05	0.68	2.625

MJ-MJ 90°
2500 Series

SAE# 070201 / MS# 51505

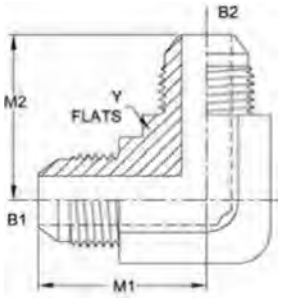

PART NO.SIZE	B1TUBE O.D.	B2 TUBE O.D.	B1 SAE 37	B2 SAE 37	B1 DRILL	B2 DRILL	MI L6TH	M2 LDTH	Y FLATS
2500-02-02-FG	1/8	1/8	5/16-24	5/16-24	0.062	0.062	0.77	0.77	0.438
2500-03-03-FG	3/16	3/16	3/8-24	3/8-24	0.125	0.125	0.83	0.83	0.438
2500-04-04-FG	1/4	1/4	7/16-20	7/16-20	0.172	0.172	0.89	0.89	0.438
2500-05-04-FG	5/16	1/4	1/2-20	7/16-20	0.234	0.172	0.95	0.95	0.562
2500-05-05-FG	5/16	5/16	1/2-20	1/2-20	0.234	0.234	0.95	0.95	0.562
2500-06-04-FG	3/8	1/4	9/16-18	7/16-20	0.297	0.172	1.06	1.05	0.562
2500-06-05-FG	3/8	5/16	9/16-18	1/2-20	0.297	0.234	1.06	1.05	0.562
2500-06-06-FG	3/8	3/8	9/16-18	9/16-18	0.297	0.297	1.06	1.06	0.562
2500-08-04-FG	1/2	1/4	3/4-16	7/16-20	0.391	0.172	1.25	1.12	0.750
2500-08-06-FG	1/2	3/8	3/4-16	9/16-18	0.391	0.297	1.25	1.14	0.750
2500-08-08-FG	1/2	1/2	3/4-16	3/4-16	0.391	0.391	1.25	1.25	0.750
2500-10-08-FG	5/8	1/2	7/8-14	3/4-16	0.484	0.391	1.45	1.33	0.875
2500-10-10-FG	5/8	5/8	7/8-14	7/8-14	0.484	0.484	1.45	1.45	0.875
2500-12-08-FG	3/4	1/2	1-1/16-12	3/4-16	0.609	0.391	1.66	1.42	1.062
2500-12-10-FG	3/4	5/8	1-1/16-12	7/8-14	0.609	0.484	1.66	1.54	1.062
2500-12-12-FG	3/4	3/4	1-1/16-12	1-1/16-12	0.609	0.609	1.66	1.66	1.062
2500-14-14-FG	7/8	7/8	1-3/16-12	1-3/16-12	0.719	0.719	1.80	1.80	1.312
2500-16-12-FG	1	3/4	1-5/16-12	1-1/16-12	0.844	0.609	1.81	1.76	1.312
2500-16-16-FG	1	1	1-5/16-12	1-5/16-12	0.844	0.844	1.81	1.81	1.312
2500-20-20-FG	1-1/4	1-1/4	1-5/8-12	1-5/8-12	1.078	1.078	2.06	2.06	1.625
2500-24-24-FG	1-1/2	1-1/2	1-7/8-12	1-7/8-12	1.312	1.312	2.33	2.33	1.875
2500-32-32-FG	2	2	2-1/2-12	2-1/2-12	1.781	1.781	3.06	3.06	2.500

Tube Fittings & Adapters

MJ-MP 90°
2501 Series

SAE# 070202 / MS# 51504

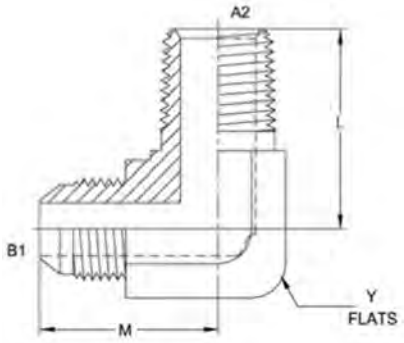

C-038

PART NO. SIZE	TUBE O.D.	B1 SAE37	A2 NPTF	B1 DRILL	A2 DRILL	M LOTH	L LCTH	Y FLATS
2501-02-02-FG	1/8	5/16-24	1/8-27	0.062	0.188	0.77	0.72	0.438
2501-02-04-FG	1/8	5/16-24	1/4-18	0.062	0.281	0.93	1.09	0.562
2501-03-02-FG	3/16	3/8-24	1/8-27	0.125	0.188	0.83	0.72	0.438
2501-03-04-FG	3/16	3/8-24	1/4-18	0.125	0.281	0.96	1.09	0.562
2501-04-01-FG	1/4	7/16-20	1/16-27	0.172	0.117	0.89	0.78	0.438
2501-04-02-FG	1/4	7/16-20	1/8-27	0.172	0.188	0.89	0.78	0.438
2501-04-04-FG	1/4	7/16-20	1/4-18	0.172	0.281	1.05	1.09	0.562
2501-04-06-FG	1/4	7/16-20	3/8-18	0.172	0.406	1.12	1.22	0.750
2501-04-08-FG	1/4	7/16-20	1/2-14	0.172	0.531	1.21	1.47	0.875
2501-04-12-FG	1/4	7/16-20	3/4-14	0.172	0.719	1.30	1.59	1.062
2501-05-02-FG	5/16	1/2-20	1/8-27	0.234	0.188	0.95	0.78	0.562
2501-05-04-FG	5/16	1/2-20	1/4-18	0.234	0.281	1.05	1.09	0.562
2501-05-06-FG	5/16	1/2-20	3/8-18	0.234	0.406	1.12	1.22	0.750
2501-05-08-FG	5/16	1/2-20	1/2-14	0.234	0.531	1.21	1.47	0.875
2501-06-01-FG	3/8	9/16-18	1/16-27	0.297	0.117	1.06	0.90	0.562
2501-06-02-FG	3/8	9/16-18	1/8-27	0.297	0.188	1.06	0.90	0.562
2501-06-04-FG	3/8	9/16-18	1/4-18	0.297	0.281	1.06	1.09	0.562
2501-06-06-FG	3/8	9/16-18	3/8-18	0.297	0.406	1.14	1.22	0.750
2501-06-08-FG	3/8	9/16-18	1/2-14	0.297	0.531	1.22	1.47	0.875
2501-06-12-FG	3/8	9/16-18	3/4-14	0.297	0.719	1.31	1.59	1.062
2501-08-02-FG	1/2	3/4-16	1/8-27	0.391	0.188	1.25	1.03	0.750
2501-08-04-FG	1/2	3/4-16	1/4-18	0.391	0.281	1.25	1.22	0.750
2501-08-06-FG	1/2	3/4-16	3/8-18	0.391	0.406	1.25	1.22	0.750
2501-08-08-FG	1/2	3/4-16	1/2-14	0.391	0.531	1.33	1.47	0.875
2501-08-12-FG	1/2	3/4-16	3/4-14	0.391	0.719	1.42	1.59	1.062
2501-08-16-FG	1/2	3/4-16	1-11-1/2	0.391	0.938	1.52	1.97	1.312
2501-10-04-FG	5/8	7/8-14	1/4-18	0.484	0.281	1.45	1.34	0.875
2501-10-06-FG	5/8	7/8-14	3/8-18	0.484	0.406	1.45	1.28	0.875
2501-10-08-FG	5/8	7/8-14	1/2-14	0.484	0.531	1.45	1.47	0.875
2501-10-12-FG	5/8	7/8-14	3/4-14	0.484	0.719	1.54	1.59	1.062
2501-10-16-FG	5/8	7/8-14	1-11-1/2	0.484	0.938	1.64	1.97	1.312
2501-12-06-FG	3/4	1-1/16-12	3/8-18	0.609	0.406	1.66	1.40	1.062
2501-12-08-FG	3/4	1-1/16-12	1/2-14	0.609	0.531	1.66	1.59	1.062
2501-12-12-FG	3/4	1-1/16-12	3/4-14	0.609	0.719	1.66	1.59	1.062
2501-12-16-FG	3/4	1-1/16-12	1-11-1/2	0.609	0.938	1.76	1.97	1.312

Continued on next page

2501 Series continued

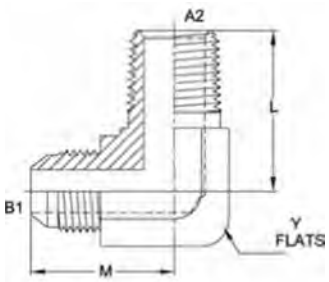

PART NO. SIZE	TUBE O.D.	B1 SAE37	A2 NPTF	B1 DRILL	A2 DRILL	M LGTH	L LGTH	Y FLATS
2501-12-20-FG	3/4	1-1/16-12	1-1/4-11-1/2	0.609	1.250	1.97	2.38	1.625
2501-14-08-FG	7/8	1-3/16-12	1/2-14	0.719	0.531	1.80	1.69	1.312
2501-14-12-FG	7/8	1-3/16-12	3/4-14	0.719	0.719	1.80	1.69	1.312
2501-14-16-FG	7/8	1-3/16-12	1-11-1/2	0.719	0.938	1.80	1.97	1.312
2501-16-08-FG	1	1-5/16-12	1/2-14	0.844	0.531	1.81	1.78	1.312
2501-16-12-FG	1	1-5/16-12	3/4-14	0.844	0.719	1.81	1.78	1.312
2501-16-16-FG	1	1-5/16-12	1-11-1/2	0.844	0.938	1.81	1.97	1.312
2501-16-20-FG	1	1-5/16-12	1-1/4-11-1/2	0.844	1.250	2.01	2.38	1.625
2501-16-24-FG	1	1-5/16-12	1-1/2-11-1/2	0.844	1.500	2.16	2.64	1.875
2501-20-12-FG	1-1/4	1-5/8-12	3/4-14	1.078	0.719	2.06	2.16	1.625
2501-20-16-FG	1-1/4	1-5/8-12	1-11-1/2	1.078	0.938	2.06	2.35	1.625
2501-20-20-FG	1-1/4	1-5/8-12	1-1/4-11-1/2	1.078	1.250	2.06	2.38	1.625
2501-20-24-FG	1-1/4	1-5/8-12	1-1/2-11-1/2	1.078	1.500	2.20	2.64	1.875
2501-24-16-FG	1-1/2	1-7/8-12	1-11-1/2	1.312	0.938	2.33	2.58	1.875
2501-24-20-FG	1-1/2	1-7/8-12	1-1/4-11-1/2	1.312	1.250	2.33	2.61	1.875
2501-24-24-FG	1-1/2	1-7/8-12	1-1/2-11-1/2	1.312	1.500	2.33	2.64	1.875
2501-24-32-FG	1-1/2	1-7/8-12	2-11-1/2	1.312	1.938	2.81	3.00	2.500
2501-32-24-FG	2	2-1/2-12	1-1/2-11-1/2	1.781	1.500	3.06	2.97	2.500
2501-32-32-FG	2	2-1/2-12	2-11-1/2	1.781	1.938	3.06	3.00	2.500
2501-40-40-FG	2-1/2	3 - 1 2	2-1/2-8	2.318	2.318	3.25	3.95	3.234

MJ-MP 90° Long
2501-L Series

SAE# 071502

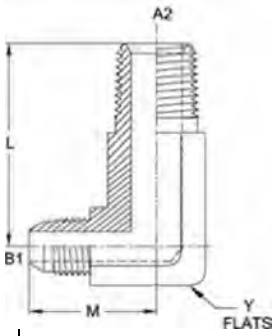

PART NO.SIZE	TUBE O.D.	B1 SAE37	A2 NPTF	B1 DRILL	A2 DRILL	M LGTH	L LGTH	Y FLATS
2501-L-03-02-FG	3/16	3/8-24	1/8-27	0.125	0.188	0.83	1.04	0.438
2501-L-04-02-FG	1/4	7/16-20	1/8-27	0.172	0.188	0.89	1.17	0.438
2501-L-04-04-FG	1/4	7/16-20	1/4-18	0.172	0.281	1.05	1.58	0.562
2501-L-05-02-FG	5/16	1/2-20	1/8-27	0.234	0.188	0.95	1.17	0.562
2501-L-05-04-FG	5/16	1/2-20	1/4-18	0.234	0.281	0.95	1.58	0.562
2501-L-06-02-FG	3/8	9/16-18	1/8-27	0.297	0.188	1.06	1.39	0.562
2501-L-06-04-FG	3/8	9/16-18	1/4-18	0.297	0.281	1.06	1.58	0.562
2501-L-06-06-FG	3/8	9/16-18	3/8-18	0.297	0.406	1.14	1.82	0.750
2501-L-06-08-FG	3/8	9/16-18	1/2-14	0.297	0.531	1.22	2.17	0.875
2501-L-08-04-FG	1/2	3/4-16	1/4-18	0.391	0.281	1.25	1.82	0.750
2501-L-08-06-FG	1/2	3/4-16	3/8-18	0.391	0.406	1.25	1.82	0.750
2501-L-08-08-FG	1/2	3/4-16	1/2-14	0.391	0.531	1.33	2.17	0.875
2501-L-08-12-FG	1/2	3/4-16	3/4-14	0.391	0.719	1.42	2.44	1.062
2501-L-10-08-FG	5/8	7/8-14	1/2-14	0.484	0.531	1.45	2.17	0.875
2501-L-10-12-FG	5/8	7/8-14	3/4-14	0.484	0.719	1.54	2.44	1.062
2501-L-12-08-FG	3/4	1-1/16-12	1/2-14	0.609	0.531	1.66	2.44	1.062
2501-L-12-12-FG	3/4	1-1/16-12	3/4-14	0.609	0.719	1.66	2.44	1.062
2501-L-12-16-FG	3/4	1-1/16-12	1-11-1/2	0.609	0.938	1.76	3.01	1.312
2501-L-14-12-FG	7/8	1-3/16-12	3/4-14	0.719	0.719	1.80	2.59	1.312
2501-L-16-12-FG	1	1-5/16-12	3/4-14	0.844	0.719	1.81	2.82	1.312
2501-L-16-16-FG	1	1-5/16-12	1-11-1/2	0.844	0.938	1.81	3.01	1.312
2501-L-20-20-FG	1-1/4	1-5/8-12	1-1/4-11-1/2	1.078	1.250	2.06	3.69	1.625
2501-L-24-24-FG	1-1/2	1-7/8-12	1-1/2-11-1/2	1.312	1.500	2.33	4.10	1.875

Tube Fittings & Adapters

MJ-MP 90° X-Long
2501 -LL Series

SAE# 071602

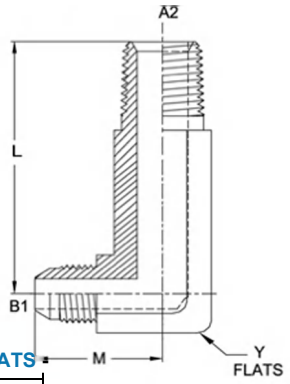

C-040

PART NO.SIZE	TUBE O.D.	B1 SAE 37	A2 NPTF	B1 DRILL	A2 DRILL	M LGTH	L LGTH	Y FLATS
2501-LL-04-02-FG	1/4	7/16-20	1/8-27	0.172	0.188	0.89	1.56	0.438
2501-LL-04-04-FG	1/4	7/16-20	1/4-18	0.172	0.281	1.05	2.07	0.562
2501-LL-05-02-FG	5/16	1/2-20	1/8-27	0.234	0.188	0.95	1.56	0.562
2501-LL-05-04-FG	5/16	1/2-20	1/4-18	0.234	0.281	1.05	2.07	0.562
2501-LL-06-04-FG	3/8	9/16-18	1/4-18	0.297	0.281	1.06	2.07	0.562
2501-LL-06-06-FG	3/8	9/16-18	3/8-18	0.297	0.406	1.14	2.42	0.750
2501-LL-06-08-FG	3/8	9/16-18	1/2-14	0.297	0.531	1.22	2.87	0.875
2501-LL-08-04-FG	1/2	3/4-16	1/4-18	0.391	0.281	1.25	2.42	0.750
2501-LL-08-06-FG	1/2	3/4-16	3/8-18	0.391	0.406	1.25	2.42	0.750
2501-LL-08-08-FG	1/2	3/4-16	1/2-14	0.391	0.531	1.33	2.87	0.875
2501-LL-10-08-FG	5/8	7/8-14	1/2-14	0.484	0.531	1.45	2.87	0.875
2501-LL-10-12-FG	5/8	7/8-14	3/4-14	0.484	0.719	1.42	3.28	1.062
2501-LL-12-08-FG	3/4	1-1/16-12	1/2-14	0.609	0.531	1.66	3.28	1.062
2501-LL-12-12-FG	3/4	1-1/16-12	3/4-14	0.609	0.719	1.66	3.28	1.062
2501-LL-14-12-FG	7/8	1-3/16-12	3/4-14	0.719	0.719	1.80	3.50	1.312
2501-LL-16-12-FG	1	1-5/16-12	3/4-14	0.844	0.719	1.81	3.86	1.312
2501-LL-16-16-FG	1	1-5/16-12	1-11-1/2	0.844	0.938	1.81	4.05	1.312
2501-LL-20-20-FG	1-1/4	1-5/8-12	1-1/4-11-1/2	1.078	1.250	2.06	5.00	1.625
2501-LL-24-24-FG	1-1/2	1-7/8-12	1-1/2-11-1/2	1.312	1.500	2.33	5.55	1.875

MJ-MP 90° XX-Long
2501-LLL Series

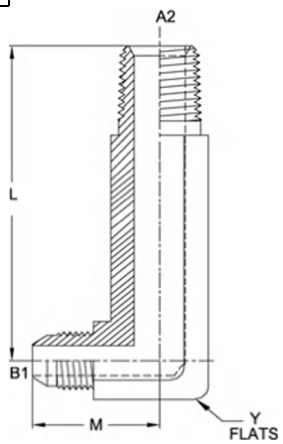

PART NO.SIZE	TUBE O.D.	B1 SAE 37	A2 NPTF	B1 DRILL	A2 DRILL	M LGTH	L LGTH	Y FLATS
2501-LLL-04-02-FG	1/4	7/16-20	1/8-27	0.172	0.188	0.89	2.31	0.438
2501-LLL-04-04-FG	1/4	7/16-20	1/4-18	0.172	0.281	1.05	3.06	0.562
2501-LLL-05-02-FG	5/16	1/2-20	1/8-27	0.234	0.188	0.95	2.31	0.562
2501-LLL-06-04-FG	3/8	9/16-18	1/4-18	0.297	0.281	1.06	3.06	0.562
2501-LLL-06-06-FG	3/8	9/16-18	3/8-18	0.297	0.406	1.14	3.75	0.750
2501-LLL-08-06-FG	1/2	3/4-16	3/8-18	0.391	0.406	1.25	3.75	0.750
2501-LLL-08-08-FG	1/2	3/4-16	1/2-14	0.391	0.531	1.33	4.50	0.875
2501-LLL-10-08-FG	5/8	7/8-14	1/2-14	0.484	0.531	1.45	4.50	0.875
2501-LLL-12-12-FG	3/4	1-1/16-12	3/4-14	0.609	0.719	1.66	5.03	1.062
2501-LLL-16-16-FG	1	1-5/16-12	1-11-1/2	0.844	0.938	1.81	6.34	1.312
2501-LLL-20-20-FG	1-1/4	1-5/8-12	1-1/4-11-1/2	1.078	1.250	2.06	7.34	1.625

MJ-FP 90°
2502 Series

SAE# 070203 / MS# 51506

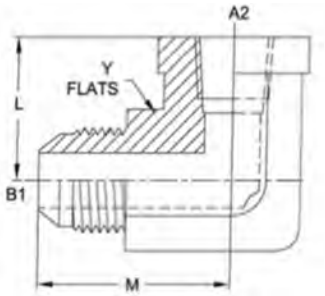

C-041

PART NO.SIZE	TUBE on.	B1 SAE 37	A2 NPTF	B1 DRILL	M LGTH	L LGTH	Y FLATS
2502-02-02-FG	1/8	5/16-24	1/8-27	0.062	1.00	0.66	0.562
2502-03-02-FG	3/16	3/8-24	1/8-27	0.125	1.03	0.66	0.562
2502-04-02-FG	1/4	7/16-20	1/8-27	0.172	1.08	0.66	0.562
2502-04-04-FG	1/4	7/16-20	1/4-18	0.172	1.22	0.88	0.750
2502-04-06-FG	1/4	7/16-20	3/8-18	0.172	1.29	1.02	0.875
2502-04-08-FG	1/4	7/16-20	1/2-14	0.172	1.40	1.23	1.062
2502-05-02-FG	5/16	1/2-20	1/8-27	0.234	1.08	0.66	0.562
2502-05-04-FG	5/16	1/2-20	1/4-18	0.234	1.22	0.88	0.750
2502-05-06-FG	5/16	1/2-20	3/8-18	0.234	1.29	1.02	0.875
2502-06-02-FG	3/8	9/16-18	1/8-27	0.297	1.23	0.67	0.750
2502-06-04-FG	3/8	9/16-18	1/4-18	0.297	1.23	0.88	0.750
2502-06-06-FG	3/8	9/16-18	3/8-18	0.297	1.31	1.02	0.875
2502-06-08-FG	3/8	9/16-18	1/2-14	0.297	1.41	1.23	1.062
2502-08-04-FG	1/2	3/4-16	1/4-18	0.391	1.42	1.01	0.875
2502-08-06-FG	1/2	3/4-16	3/8-18	0.391	1.42	1.02	0.875
2502-08-08-FG	1/2	3/4-16	1/2-14	0.391	1.52	1.23	1.062
2502-08-12-FG	1/2	3/4-16	3/4-14	0.391	1.65	1.36	1.312
2502-10-06-FG	5/8	7/8-14	3/8-18	0.484	1.64	1.01	1.062
2502-10-08-FG	5/8	7/8-14	1/2-14	0.484	1.64	1.23	1.062
2502-10-12-FG	5/8	7/8-14	3/4-14	0.484	1.77	1.36	1.312
2502-12-08-FG	3/4	1-1/16-12	1/2-14	0.609	1.89	1.35	1.312
2502-12-12-FG	3/4	1-1/16-12	3/4-14	0.609	1.89	1.36	1.312
2502-12-16-FG	3/4	1-1/16-12	1-11-1/2	0.609	2.12	1.62	1.625
2502-14-12-FG	7/8	1-3/16-12	3/4-14	0.719	1.86	1.42	1.312
2502-16-12-FG	1	1-5/16-12	3/4-14	0.844	2.17	1.62	1.625
2502-16-16-FG	1	1-5/16-12	1-11-1/2	0.844	2.17	1.62	1.625
2502-16-20-FG	1	1-5/16-12	1-1/4-11-1/2	0.844	2.28	1.70	1.875
2502-20-20-FG	1-1/4	1-5/8-12	1-1/4-11-1/2	1.078	2.33	1.70	1.875
2502-24-24-FG	1-1/2	1-7/8-12	1-1/2-11-1/2	1.312	2.89	2.08	2.562
2502-32-32-FG	2	2-1/2-12	2-11-1/2	1.781	3.30	2.39	2.812

Tube Fittings & Adapters

MJ-MP 45°
2503 Series

SAE# 070302 / MS# 51508

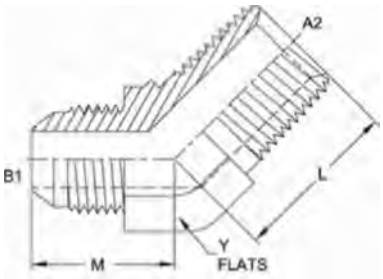

C-042

PART NO.SIZE	TUBE O.D.	B1 SAE 37	A2 NPTF	B1 DRILL	A2 ORILL	M LGTH	I LGTH	Y FLATS
2503-02-02-FG	1/8	5/16-24	1/8-27	0.062	0.188	0.69	0.52	0.438
2503-03-02-FG	3/16	3/8-24	1/8-27	0.125	0.188	0.69	0.52	0.438
2503-04-02-FG	1/4	7/16-20	1/8-27	0.172	0.188	0.72	0.64	0.438
2503-04-04-FG	1/4	7/16-20	1/4-18	0.172	0.281	0.82	0.86	0.562
2503-04-06-FG	1/4	7/16-20	3/8-18	0.172	0.406	0.85	0.95	0.750
2503-04-08-FG	1/4	7/16-20	1/2-14	0.172	0.531	0.87	1.17	0.875
2503-05-02-FG	5/16	1/2-20	1/8-27	0.234	0.188	0.77	0.64	0.562
2503-05-04-FG	5/16	1/2-20	1/4-18	0.234	0.281	0.82	0.86	0.562
2503-05-06-FG	5/16	1/2-20	3/8-18	0.234	0.406	0.85	0.95	0.750
2503-06-02-FG	3/8	9/16-18	1/8-27	0.297	0.188	0.83	0.67	0.562
2503-06-04-FG	3/8	9/16-18	1/4-18	0.297	0.281	0.83	0.86	0.562
2503-06-06-FG	3/8	9/16-18	3/8-18	0.297	0.406	0.87	0.95	0.750
2503-06-08-FG	3/8	9/16-18	1/2-14	0.297	0.531	0.88	1.17	0.875
2503-06-12-FG	3/8	9/16-18	3/4-14	0.297	0.719	0.93	1.20	1.062
2503-08-04-FG	1/2	3/4-16	1/4-18	0.391	0.281	0.98	0.95	0.750
2503-08-06-FG	1/2	3/4-16	3/8-18	0.391	0.406	0.98	0.95	0.750
2503-08-08-FG	1/2	3/4-16	1/2-14	0.391	0.531	0.99	1.17	0.875
2503-08-12-FG	1/2	3/4-16	3/4-14	0.391	0.719	1.04	1.20	1.062
2503-10-04-FG	5/8	7/8-14	1/4-18	0.484	0.281	1.11	0.98	0.875
2503-10-06-FG	5/8	7/8-14	3/8-18	0.484	0.406	1.11	0.98	0.875
2503-10-08-FG	5/8	7/8-14	1/2-14	0.484	0.531	1.11	1.17	0.875
2503-10-12-FG	5/8	7/8-14	3/4-14	0.484	0.719	1.16	1.20	1.062
2503-12-08-FG	3/4	1-1/16-12	1/2-14	0.609	0.531	1.28	1.20	1.062
2503-12-12-FG	3/4	1-1/16-12	3/4-14	0.609	0.719	1.28	1.20	1.062
2503-12-16-FG	3/4	1-1/16-12	1-11-1/2	0.609	0.938	1.42	1.48	1.312
2503-14-12-FG	7/8	1-3/16-12	3/4-14	0.719	0.719	1.45	1.30	1.312
2503-16-08-FG	1	1-5/16-12	1/2-14	0.844	0.531	1.47	1.29	1.312
2503-16-12-FG	1	1-5/16-12	3/4-14	0.844	0.719	1.47	1.29	1.312
2503-16-16-FG	1	1-5/16-12	1-11-1/2	0.844	0.938	1.47	1.48	1.312
2503-16-20-FG	1	1-5/16-12	1-1/4-11-1/2	0.844	1.250	1.54	1.67	1.625
2503-20-16-FG	1-1/4	1-5/8-12	1-11-1/2	1.078	0.938	1.59	1.64	1.625
2503-20-20-FG	1-1/4	1-5/8-12	1-1/4-11-1/2	1.078	1.250	1.59	1.67	1.625
2503-20-24-FG	1-1/4	1-5/8-12	1-1/2-11-1/2	1.078	1.500	1.65	1.77	1.875
2503-24-20-FG	1-1/2	1-7/8-12	1-1/4-11-1/2	1.312	1.250	1.78	1.74	1.875
2503-24-24-FG	1-1/2	1-7/8-12	1-1/2-11-1/2	1.312	1.500	1.78	1.77	1.875
2503-32-32-FG	2	2-1/2-12	2-11-1/2	1.781	1.938	2.22	2.11	2.500
2503-40-40-FG	2-1/2	8 8	2 1/2-8	2.318	2.318	2.49	2.20	3.234

MJ-MJ 45°
2504 Series

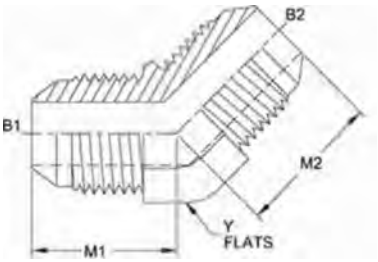

C-043

PART NO.SIZE	B1 TUBE O.D.	B2 TUBE O.D.	B1 SAE37	B2 SAE37	B1 DRILL	B2 DRILL	MI LOTH	M2 LGTH	Y FLATS
2504-03-03-FG	3/16	3/16	3/8-24	3/8-24	0.125	0.125	0.69	0.69	0.438
2504-04-04-FG	1/4	1/4	7/16-20	7/16-20	0.172	0.172	0.72	0.72	0.438
2504-06-04-FG	3/8	3/8	9/16-18	7/16-20	0.297	0.172	0.83	0.82	0.562
2504-06-06-FG	3/8	3/8	9/16-18	9/16-18	0.297	0.297	0.83	0.83	0.562
2504-08-08-FG	1/2	1/2	3/4-16	3/4-16	0.391	0.391	0.98	0.98	0.750
2504-10-10-FG	5/8	5/8	7/8-14	7/8-14	0.484	0.484	1.11	1.11	0.875
2504-12-12-FG	3/4	3/4	1-1/16-12	1-1/16-12	0.609	0.609	1.28	1.28	1.062
2504-16-16-FG	1	1	1-5/16-12	1-5/16-12	0.844	0.844	1.47	1.47	1.312

MJ-FP 45°
2505 Series

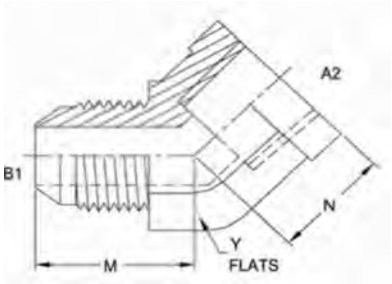

PART NO.SIZE	TUBE O.D.	B1 SAE37	A2 NPTF	B1 DRILL	M LGTH	N LGTH	Y FLATS
2505-04-04-FG	1/4	7/16-20	1/4-18	0.172	0.85	0.62	0.750
2505-06-04-FG	3/8	9/16-18	1/4-18	0.297	0.87	0.62	0.750
2505-06-06-FG	3/8	9/16-18	3/8-18	0.297	0.88	0.72	0.875
2505-08-06-FG	1/2	3/4-16	3/8-18	0.391	0.99	0.72	0.875
2505-08-08-FG	1/2	3/4-16	1/2-14	0.391	1.04	0.91	1.062
2505-10-08-FG	5/8	7/8-14	1/2-14	0.484	1.16	0.91	1.062
2505-12-12-FG	3/4	1-1/16-12	3/4-14	0.609	1.42	0.97	1.312
2505-16-16-FG	1	1-5/16-12	1-11-1/2	0.844	1.54	1.12	1.625

Tube Fittings & Adapters

MJ-MJ-MP Tee
2601 Series

SAE# 070425 / MS# 51512

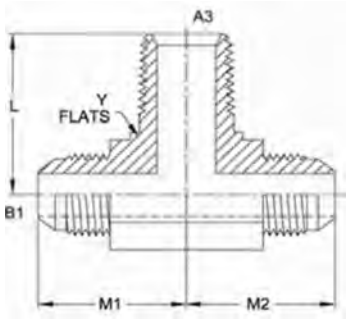

C-044

PART NO.SIZE	TUBE O.D.	B1 SAE37	B2 SAE37	A3 NPTE	B1 DRILL	B2 DRILL	A3 DRILL	MI LGTH	M2 LGTH	L LGTH	Y FLATS
2601-02-02-02-FG	1/8	5/16-24	5/16-24	1/8-27	0.062	0.062	0.188	0.77	0.77	0.72	0.438
2601-03-03-02-FG	3/16	3/8-24	3/8-24	1/8-27	0.125	0.125	0.188	0.83	0.83	0.72	0.438
2601-04-04-02-FG	1/4	7/16-20	7/16-20	1/8-27	0.172	0.172	0.188	0.89	0.89	0.78	0.438
2601-04-04-04-FG	1/4	7/16-20	7/16-20	1/4-18	0.172	0.172	0.281	1.05	1.05	1.09	0.562
2601-04-04-06-FG	1/4	7/16-20	7/16-20	3/8-18	0.172	0.172	0.406	1.12	1.12	1.22	0.750
2601-05-05-02-FG	5/16	1/2-20	1/2-20	1/8-27	0.234	0.234	0.188	0.95	0.95	0.78	0.562
2601-05-05-04-FG	5/16	1/2-20	1/2-20	1/4-18	0.234	0.234	0.281	1.05	1.05	1.09	0.562
2601-06-06-02-FG	3/8	9/16-18	9/16-18	1/8-27	0.297	0.297	0.188	1.06	1.06	0.90	0.562
2601-06-06-04-FG	3/8	9/16-18	9/16-18	1/4-18	0.297	0.297	0.281	1.06	1.06	1.09	0.562
2601-06-06-06-FG	3/8	9/16-18	9/16-18	3/8-18	0.297	0.297	0.406	1.14	1.14	1.22	0.750
2601-06-06-08-FG	3/8	9/16-18	9/16-18	1/2-14	0.297	0.297	0.531	1.22	1.22	1.47	0.875
2601-08-04-08-FG	1/2	3/4-16	7/16-20	1/2-14	0.391	0.172	0.531	1.33	1.21	1.47	0.875
2601-08-08-04-FG	1/2	3/4-16	3/4-16	1/4-18	0.391	0.391	0.281	1.25	1.25	1.22	0.750
2601-08-08-06-FG	1/2	3/4-16	3/4-16	3/8-18	0.391	0.391	0.406	1.25	1.25	1.22	0.750
2601-08-08-08-FG	1/2	3/4-16	3/4-16	1/2-14	0.391	0.391	0.531	1.33	1.33	1.47	0.875
2601-08-08-12-FG	1/2	3/4-16	3/4-16	3/4-14	0.391	0.391	0.719	1.42	1.42	1.59	1.062
2601-10-10-06-FG	5/8	7/8-14	7/8-14	3/8-18	0.484	0.484	0.406	1.45	1.45	1.28	0.875
2601-10-10-08-FG	5/8	7/8-14	7/8-14	1/2-14	0.484	0.484	0.531	1.45	1.45	1.47	0.875
2601-10-10-12-FG	5/8	7/8-14	7/8-14	3/4-14	0.484	0.484	0.719	1.54	1.54	1.59	1.062
2601-12-12-08-FG	3/4	1-1/16-12	1-1/16-12	1/2-14	0.609	0.609	0.531	1.66	1.66	1.59	1.062
2601-12-12-12-FG	3/4	1-1/16-12	1-1/16-12	3/4-14	0.609	0.609	0.719	1.66	1.66	1.59	1.062
2601-12-12-16-FG	3/4	1-1/16-12	1-1/16-12	1-11-1/2	0.609	0.609	0.938	1.76	1.76	1.97	1.312
2601-12-16-20-FG	3/4	1-1/16-12	1-5/16-12	1-1/4-11-1/2	0.609	0.844	1.250	1.97	2.01	2.38	1.625
2601-14-14-12-FG	7/8	1-3/16-12	1-3/16-12	3/4-14	0.719	0.719	0.719	1.80	1.80	1.69	1.312
2601-16-16-12-FG	1	1-5/16-12	1-5/16-12	3/4-14	0.844	0.844	0.719	1.81	1.81	1.78	1.312
2601-16-16-16-FG	1	1-5/16-12	1-5/16-12	1-11-1/2	0.844	0.844	0.938	1.81	1.81	1.97	1.312
2601-20-20-20-FG	1-1/4	1-5/8-12	1-5/8-12	1-1/4-11-1/2	1.078	1.078	1.250	2.06	2.06	2.38	1.625
2601-24-24-24-FG	1-1/2	1-7/8-12	1-7/8-12	1-1/2-11-1/2	1.312	1.312	1.500	2.33	2.33	2.64	1.875
2601-32-32-32-FG	2	2-1/2-12	2-1/2-12	2-11-1/2	1.781	1.781	1.938	3.06	3.06	3.00	2.500

MJ-MJ-FP Tee
2602 Series

SAE# 070427 / MS# 51513

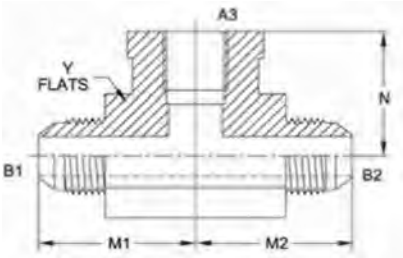

PART NO.SIZE	TUBE O.D.	B1 SAE 37	B2 SAE 37	A3 NPTF	B1 DRILL	B2 DRILL	M I LGTH	M2 LGTH	N LGTH	Y FLATS
2602-03-03-02-FG	3/16	3/8-24	3/8-24	1/8-27	0.125	0.125	1.03	1.03	0.66	0.562
2602-04-04-02-FG	1/4	7/16-20	7/16-20	1/8-27	0.172	0.172	1.08	1.08	0.66	0.562
2602-04-04-04-FG	1/4	7/16-20	7/16-20	1/4-18	0.172	0.172	1.22	1.22	0.88	0.750
2602-05-05-02-FG	5/16	1/2-20	1/2-20	1/8-27	0.234	0.234	1.08	1.08	0.66	0.562
2602-06-06-04-FG	3/8	9/16-18	9/16-18	1/4-18	0.297	0.297	1.23	1.23	0.88	0.750
2602-06-06-06-FG	3/8	9/16-18	9/16-18	3/8-18	0.297	0.297	1.31	1.31	1.02	0.875
2602-08-08-04-FG	1/2	3/4-16	3/4-16	1/4-18	0.391	0.391	1.42	1.42	1.02	0.875
2602-08-08-06-FG	1/2	3/4-16	3/4-16	3/8-18	0.391	0.391	1.42	1.42	1.02	0.875
2602-08-08-08-FG	1/2	3/4-16	3/4-16	1/2-14	0.391	0.391	1.52	1.52	1.23	1.062
2602-10-10-04-FG	5/8	7/8-14	7/8-14	1/4-18	0.484	0.484	1.64	1.64	1.04	1.062
2602-10-10-08-FG	5/8	7/8-14	7/8-14	1/2-14	0.484	0.484	1.64	1.64	1.23	1.062
2602-10-10-12-FG	5/8	7/8-14	7/8-14	3/4-14	0.484	0.484	1.77	1.77	1.36	1.312
2602-12-12-08-FG	3/4	1-1/16-12	1-1/16-12	1/2-14	0.609	0.609	1.89	1.89	1.36	1.312
2602-12-12-12-FG	3/4	1-1/16-12	1-1/16-12	3/4-14	0.609	0.609	1.89	1.89	1.36	1.312
2602-12-12-16-FG	3/4	1-1/16-12	1-1/16-12	1-11-1/2	0.609	0.609	2.12	2.12	1.62	1.625
2602-14-14-12-FG	7/8	1-3/16-12	1-3/16-12	3/4-14	0.719	0.719	1.86	1.86	1.42	1.312
2602-16-16-12-FG	1	1-5/16-12	1-5/16-12	3/4-14	0.844	0.844	2.17	2.17	1.43	1.625
2602-16-16-16-FG	1	1-5/16-12	1-5/16-12	1-11-1/2	0.844	0.844	2.17	2.17	1.62	1.625
2602-20-20-20-FG	1-1/4	1-5/8-12	1-5/8-12	1-1/4-11-1/2	1.078	1.078	2.33	2.33	1.70	1.875
2602-24-24-24-FG	1-1/2	1-7/8-12	1-7/8-12	1-1/2-11-1/2	1.312	1.312	2.89	2.89	2.08	2.562
2602-32-32-32-FG	2	2-1/2-12	2-1/2-12	2-11-1/2	1.781	1.781	3.30	3.30	2.39	2.812

Tube Fittings & Adapters

MJ-MJ-MJ Tee
2603 Series

SAE# 070401 / MS# 51510

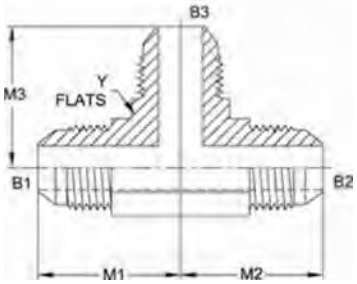

C-046

PART NO.SIZE	TUBE O.D.	B1 SAE 37	B2 SAE 37	B3 SAE 37	B1 DRILL	82 DRILL	B3 DRILL	MI LOTH	M2 LGTH	M3 LGTH	Y FLATS
2603-02-02-02-FG	1/8	5/16-24	5/16-24	5/16-24	0.062	0.062	0.062	0.77	0.77	0.77	0.438
2603-03-03-03-FG	3/16	3/8-24	3/8-24	3/8-24	0.125	0.125	0.125	0.83	0.83	0.83	0.438
2603-04-04-04-FG	1/4	7/16-20	7/16-20	7/16-20	0.172	0.172	0.172	0.89	0.89	0.89	0.438
2603-04-04-06-FG	1/4	7/16-20	7/16-20	9/16-18	0.172	0.172	0.297	1.05	1.05	1.06	0.562
2603-05-05-04-FG	5/16	1/2-20	1/2-20	7/16-20	0.234	0.234	0.172	0.95	0.95	0.95	0.562
2603-05-05-05-FG	5/16	1/2-20	1/2-20	1/2-20	0.234	0.234	0.234	0.95	0.95	0.95	0.562
2603-06-06-04-FG	3/8	9/16-18	9/16-18	7/16-20	0.297	0.297	0.172	1.06	1.06	1.05	0.562
2603-06-06-06-FG	3/8	9/16-18	9/16-18	9/16-18	0.297	0.297	0.297	1.06	1.06	1.06	0.562
2603-06-06-08-FG	3/8	9/16-18	9/16-18	3/4-16	0.297	0.297	0.391	1.14	1.14	1.25	0.750
2603-06-06-10-FG	3/8	9/16-18	9/16-18	7/8-14	0.297	0.297	0.484	1.22	1.22	1.45	0.875
2603-08-06-06-FG	1/2	3/4-16	9/16-18	9/16-18	0.391	0.297	0.297	1.25	1.14	1.14	0.750
2603-08-08-06-FG	1/2	3/4-16	3/4-16	9/16-18	0.391	0.391	0.297	1.25	1.25	1.14	0.750
2603-08-08-08-FG	1/2	3/4-16	3/4-16	3/4-16	0.391	0.391	0.391	1.25	1.25	1.25	0.750
2603-08-08-10-FG	1/2	3/4-16	3/4-16	7/8-14	0.391	0.391	0.484	1.33	1.33	1.45	0.875
2603-08-08-12-FG	1/2	3/4-16	3/4-16	1-1/16-12	0.391	0.391	0.609	1.42	1.42	1.66	1.062
2603-10-08-08-FG	5/8	7/8-14	3/4-16	3/4-16	0.484	0.391	0.391	1.45	1.33	1.33	0.875
2603-10-10-06-FG	5/8	7/8-14	7/8-14	9/16-18	0.484	0.484	0.297	1.45	1.45	1.22	0.875
2603-10-10-08-FG	5/8	7/8-14	7/8-14	3/4-16	0.484	0.484	0.391	1.45	1.45	1.33	0.875
2603-10-10-10-FG	5/8	7/8-14	7/8-14	7/8-14	0.484	0.484	0.484	1.45	1.45	1.45	0.875
2603-10-10-12-FG	5/8	7/8-14	7/8-14	1-1/16-12	0.484	0.484	0.609	1.54	1.54	1.66	1.062
2603-12-10-10-FG	3/4	1-1/16-12	7/8-14	7/8-14	0.609	0.484	0.484	1.66	1.54	1.54	1.062
2603-12-12-06-FG	3/4	1-1/16-12	1-1/16-12	9/16-18	0.609	0.609	0.297	1.66	1.66	1.31	1.062
2603-12-12-08-FG	3/4	1-1/16-12	1-1/16-12	3/4-16	0.609	0.609	0.391	1.66	1.66	1.42	1.062
2603-12-12-10-FG	3/4	1-1/16-12	1-1/16-12	7/8-14	0.609	0.609	0.484	1.66	1.66	1.54	1.062
2603-12-12-12-FG	3/4	1-1/16-12	1-1/16-12	1-1/16-12	0.609	0.609	0.609	1.66	1.66	1.66	1.062
2603-12-12-16-FG	3/4	1-1/16-12	1-1/16-12	1-5/16-12	0.609	0.609	0.844	1.76	1.76	1.81	1.312
2603-12-12-20-FG	3/4	1-1/16-12	1-1/16-12	1-5/8-12	0.609	0.609	1.078	1.97	1.97	2.06	1.625
2603-14-14-14-FG	7/8	1-3/16-12	1-3/16-12	1-3/16-12	0.719	0.719	0.719	1.80	1.80	1.80	1.312
2603-16-12-12-FG	1	1-5/16-12	1-1/16-12	1-1/16-12	0.844	0.609	0.609	1.81	1.76	1.76	1.312
2603-16-12-16-FG	1	1-5/16-12	1-1/16-12	1-5/16-12	0.844	0.609	0.844	1.81	1.76	1.81	1.312
2603-16-16-12-FG	1	1-5/16-12	1-5/16-12	1-1/16-12	0.844	0.844	0.609	1.81	1.81	1.76	1.312
2603-16-16-16-FG	1	1-5/16-12	1-5/16-12	1-5/16-12	0.844	0.844	0.844	1.81	1.81	1.81	1.312
2603-20-20-12-FG	1-1/4	1-5/8-12	1-5/8-12	1-1/16-12	1.078	1.078	0.609	2.06	2.06	1.97	1.625
2603-20-20-16-FG	1-1/4	1-5/8-12	1-5/8-12	1-5/16-12	1.078	1.078	0.844	2.06	2.06	2.01	1.625
2603-20-20-20-FG	1-1/4	1-5/8-12	1-5/8-12	1-5/8-12	1.078	1.078	1.078	2.06	2.06	2.06	1.625
2603-24-24-24-FG	1-1/2	1-7/8-12	1-7/8-12	1-7/8-12	1.312	1.312	1.312	2.33	2.33	2.33	1.875
2603-32-32-32-FG	2	2-1/2-12	2-1/2-12	2-1/2-12	1.781	1.781	1.781	3.06	3.06	3.06	2.500

MJ-MP-MJ Tee
2605 Series

SAE# 070424 / MS# 51511

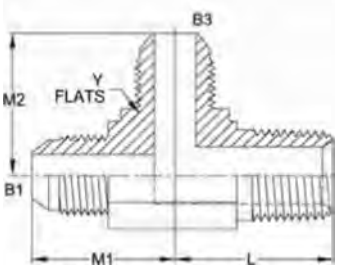

C-047

PART NO.SIZE	TUBE O.D.	B1 SAE37	A2 NPTF	B3 SAE37	B1 DRILL	A2 DRILL	B3 DRILL	MI LGTH	L LGTH	M2 LGTH	Y FLATS
2605-03-02-03-FG	3/16	3/8-24	1/8-27	3/8-24	0.125	0.188	0.125	0.83	0.72	0.83	0.438
2605-04-02-04-FG	1/4	7/16-20	1/8-27	7/16-20	0.172	0.188	0.172	0.89	0.78	0.89	0.438
2605-04-04-04-FG	1/4	7/16-20	1/4-18	7/16-20	0.172	0.281	0.172	1.05	1.09	1.05	0.562
2605-05-02-05-FG	5/16	1/2-20	1/8-27	1/2-20	0.234	0.188	0.234	0.95	0.78	0.95	0.562
2605-05-04-05-FG	5/16	1/2-20	1/4-18	1/2-20	0.234	0.281	0.234	1.05	1.09	1.05	0.562
2605-06-02-06-FG	3/8	9/16-18	1/8-27	9/16-18	0.297	0.188	0.297	1.06	0.90	1.06	0.562
2605-06-04-04-FG	3/8	9/16-18	1/4-18	7/16-20	0.297	0.281	0.172	1.06	1.09	1.05	0.562
2605-06-04-06-FG	3/8	9/16-18	1/4-18	9/16-18	0.297	0.281	0.297	1.06	1.09	1.06	0.562
2605-06-06-06-FG	3/8	9/16-18	3/8-18	9/16-18	0.297	0.406	0.297	1.14	1.22	1.14	0.750
2605-06-08-06-FG	3/8	9/16-18	1/2-14	9/16-18	0.297	0.531	0.297	1.22	1.47	1.22	0.875
2605-08-04-08-FG	1/2	3/4-16	1/4-18	3/4-16	0.391	0.281	0.391	1.25	1.22	1.25	0.750
2605-08-06-06-FG	1/2	3/4-16	3/8-18	9/16-18	0.391	0.406	0.297	1.25	1.22	1.14	0.750
2605-08-06-08-FG	1/2	3/4-16	3/8-18	3/4-16	0.391	0.406	0.391	1.25	1.22	1.25	0.750
2605-08-08-06-FG	1/2	3/4-16	1/2-14	9/16-18	0.391	0.531	0.297	1.25	1.47	1.22	0.875
2605-08-08-08-FG	1/2	3/4-16	1/2-14	3/4-16	0.391	0.531	0.391	1.33	1.47	1.33	0.875
2605-08-12-08-FG	1/2	3/4-16	3/4-14	3/4-16	0.391	0.719	0.391	1.42	1.59	1.42	1.062
2605-10-08-10-FG	5/8	7/8-14	1/2-14	7/8-14	0.484	0.531	0.484	1.45	1.47	1.45	0.875
2605-10-12-10-FG	5/8	7/8-14	3/4-14	7/8-14	0.484	0.719	0.484	1.54	1.59	1.54	1.062
2605-12-08-12-FG	3/4	1-1/16-12	1/2-14	1-1/16-12	0.609	0.531	0.609	1.66	1.59	1.66	1.062
2605-12-12-08-FG	3/4	1-1/16-12	3/4-14	3/4-16	0.609	0.719	0.391	1.66	1.59	1.42	1.062
2605-12-12-12-FG	3/4	1-1/16-12	3/4-14	1-1/16-12	0.609	0.719	0.609	1.66	1.59	1.66	1.062
2605-14-12-14-FG	7/8	1-3/16-12	3/4-14	1-3/16-12	0.719	0.719	0.719	1.80	1.69	1.80	1.312
2605-16-12-16-FG	1	1-5/16-12	3/4-14	1-5/16-12	0.844	0.719	0.844	1.81	1.78	1.81	1.312
2605-16-16-16-FG	1	1-5/16-12	1-11-1/2	1-5/16-12	0.844	0.938	0.844	1.81	1.97	1.81	1.312
2605-20-16-20-FG	1-1/4	1-5/8-12	1-11-1/2	1-5/8-12	1.078	0.938	1.078	2.06	2.35	2.06	1.625
2605-20-20-16-FG	1-1/4	1-5/8-12	1-1/4-11-1/2	1-5/16-12	1.078	1.250	0.844	2.06	2.38	2.01	1.625
2605-20-20-20-FG	1-1/4	1-5/8-12	1-1/4-11-1/2	1-5/8-12	1.078	1.250	1.078	2.06	2.38	2.06	1.625
2605-24-24-24-FG	1-1/2	1-7/8-12	1-1/2-11-1/2	1-7/8-12	1.312	1.500	1.312	2.33	2.64	2.33	1.875
2605-32-32-32-FG	2	2-1/2-12	2-11-1/2	2-1/2-12	1.781	1.938	1.781	3.06	3.00	3.06	2.500

MJ-FP-MJ Tee
2606 Series

SAE# 070426 / MS# 51514

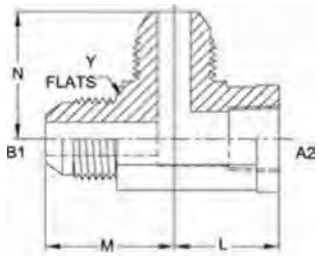

PART NO.SIZE	TUBE O.D.	B1 SAE 37	A2 NPTF	B3 SAE 37	B1 DRILL	B3 DRILL	M LBTH	L LGTH	N LGTH	Y FLATS
2606-03-02-03-FG	3/16	3/8-24	1/8-27	3/8-24	0.125	0.125	1.03	0.66	1.03	0.562
2606-04-02-04-FG	1/4	7/16-20	1/8-27	7/16-20	0.172	0.172	1.08	0.66	1.08	0.562
2606-04-04-04-FG	1/4	7/16-20	1/4-18	7/16-20	0.172	0.172	1.22	0.88	1.22	0.750
2606-05-02-05-FG	5/16	1/2-20	1/8-27	1/2-20	0.234	0.234	1.08	0.66	1.08	0.562
2606-05-04-05-FG	5/16	1/2-20	1/4-18	1/2-20	0.234	0.234	1.22	0.88	1.22	0.750
2606-06-04-06-FG	3/8	9/16-18	1/4-18	9/16-18	0.297	0.297	1.23	0.88	1.23	0.750
2606-06-06-04-FG	3/8	9/16-18	3/8-18	7/16-20	0.297	0.172	1.31	1.02	1.29	0.875
2606-06-06-06-FG	3/8	9/16-18	3/8-18	9/16-18	0.297	0.297	1.31	1.02	1.31	0.875
2606-08-06-08-FG	1/2	3/4-16	3/8-18	3/4-16	0.391	0.391	1.42	1.02	1.42	0.875
2606-08-08-08-FG	1/2	3/4-16	1/2-14	3/4-16	0.391	0.391	1.52	1.23	1.52	1.062
2606-10-08-10-FG	5/8	7/8-14	1/2-14	7/8-14	0.484	0.484	1.64	1.23	1.64	1.062
2606-12-12-12-FG	3/4	1-1/16-12	3/4-14	1-1/16-12	0.609	0.609	1.89	1.36	1.89	1.312
2606-14-12-14-FG	7/8	1-3/16-12	3/4-14	1-3/16-12	0.719	0.719	1.86	1.42	1.86	1.312
2606-16-16-16-FG	1	1-5/16-12	1-11-1/2	1-5/16-12	0.844	0.844	2.17	1.62	2.17	1.625
2606-20-20-20-FG	1-1/4	1-5/8-12	1-1/4-11-1/2	1-5/8-12	1.078	1.078	2.33	1.70	2.33	1.875
2606-24-24-24-FG	1-1/2	1-7/8-12	1-1/2-11-1/2	1-7/8-12	1.312	1.312	2.89	2.08	2.89	2.562
2606-32-32-32-FG	2	2-1/2-12	2-11-1/2	2-1/2-12	1.781	1.781	3.30	2.39	3.30	2.812

MJ-MP-MP Tee
2607 Series

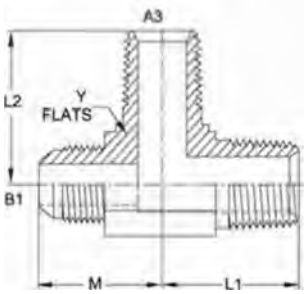

PART NO.SIZE	TUBE O.D.	B1 SAE 37	A2 NPTF	A3 NPTF	B1 DRILL	A2 DRILL	A3 DRILL	M LGTH	LI LGTH	L2 LGTH	Y FLATS
2607-04-02-02-FG	1/4	7/16-20	1/8-27	1/8-27	0.172	0.188	0.188	0.89	0.72	0.72	0.438
2607-06-04-04-FG	3/8	9/16-18	1/4-18	1/4-18	0.297	0.281	0.281	1.06	1.09	1.09	0.562
2607-06-06-06-FG	3/8	9/16-18	3/8-18	3/8-18	0.297	0.406	0.406	1.14	1.22	1.22	0.750
2607-08-06-06-FG	1/2	3/4-16	3/8-18	3/8-18	0.391	0.406	0.406	1.25	1.22	1.22	0.750
2607-08-08-08-FG	1/2	3/4-16	1/2-14	1/2-14	0.391	0.531	0.531	1.33	1.47	1.47	0.875
2607-10-08-06-FG	5/8	7/8-14	1/2-14	3/8-18	0.484	0.531	0.406	1.45	1.47	1.28	0.875
2607-10-08-08-FG	5/8	7/8-14	1/2-14	1/2-14	0.484	0.531	0.531	1.45	1.47	1.47	0.875
2607-12-12-12-FG	3/4	1 1/16-12	3/4-14	3/4-14	0.609	0.719	0.719	1.66	1.59	1.59	1.062
2607-16-16-16-FG	1	1 5/16-12	1-11 1/2	1-11 1/2	0.844	0.938	0.938	1.81	1.97	1.97	1.312
2607-20-20-20-FG	1-1/4	1 5/8-12	1 1/4-11 1/2	1 1/4-11 1/2	1.078	1.250	1.250	2.06	2.38	2.38	1.625

MJ-FP-MP Tee
2608 Series

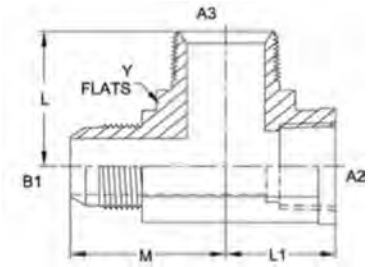

PART NO.SIZE	TUBE O.D.	B1 SAE37	A2 NPTF	A3 NPTF	B1 BRILL	A3 DRILL	M LGTH	LI LGTH	I LGTH	Y FLATS
2608-04-02-02-FG	1/4	7/16-20	1/8-27	1/8-27	0.172	0.188	1.08	0.66	0.78	0.562
2608-06-04-04-FG	3/8	9/16-18	1/4-18	1/4-18	0.297	0.281	1.23	0.88	1.09	0.750
2608-08-02-06-FG	1/2	3/4-16	1/8-27	3/8-18	0.391	0.406	1.25	0.81	1.22	0.750
2608-08-06-06-FG	1/2	3/4-16	3/8-18	3/8-18	0.391	0.406	1.42	1.02	1.22	0.875
2608-10-08-08-FG	5/8	7/8-14	1/2-14	1/2-14	0.484	0.531	1.64	1.23	1.47	1.062
2608-12-12-12-FG	3/4	1-1/16-12	3/4-14	3/4-14	0.609	0.719	1.89	1.36	1.59	1.312
2608-16-16-16-FG	1	1-5/16-12	1-11-1/2	1-11-1/2	0.844	0.938	2.17	1.62	1.70	1.625

MJ-FP-FP Tee
2609 Series

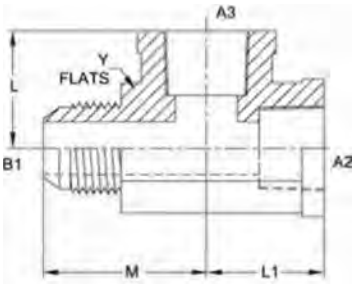

PART NO.SIZE	TUBE O.D.	B1 SAE 37	A2 NPTF	A3 NPTF	B1 DRILL	M LGTH	LI LGTH	L LGTH	Y FIATS
2609-04-02-02-FG	1/4	7/16-20	1/8-27	1/8-27	0.172	1.08	0.66	0.66	0.562
2609-04-04-04-FG	1/4	7/16-20	1/4-18	1/4-18	0.172	1.22	0.88	0.88	0.750
2609-05-04-04-FG	5/16	1/2-20	1/4-18	1/4-18	0.234	1.22	0.88	0.88	0.750
2609-06-04-04-FG	3/8	9/16-18	1/4-18	1/4-18	0.297	1.23	0.88	0.88	0.750
2609-08-06-06-FG	1/2	3/4-16	3/8-18	3/8-18	0.391	1.42	1.02	1.02	0.875
2609-08-08-08-FG	1/2	3/4-16	1/2-14	1/2-14	0.391	1.52	1.23	1.23	1.062
2609-10-08-08-FG	5/8	7/8-14	1/2-14	1/2-14	0.484	1.64	1.23	1.23	1.062
2609-12-12-12-FG	3/4	1-1/16-12	3/4-14	3/4-14	0.609	1.89	1.36	1.36	1.312
2609-16-16-16-FG	1	1-5/16-12	1-11-1/2	1-11-1/2	0.844	2.17	1.62	1.62	1.625
2609-20-20-20-FG	1-1/4	1-5/8-12	1-1/4-11-1/2	1-1/4-11-1/2	1.078	2.33	1.70	1.70	1.875
2609-24-24-24-FG	1-1/2	1-7/8-12	1-1/2-11-1/2	1-1/2-11-1/2	1.312	2.89	2.08	2.08	2.562

Tube Fittings & Adapters

MP-MP-MJ Tee
2610 Series

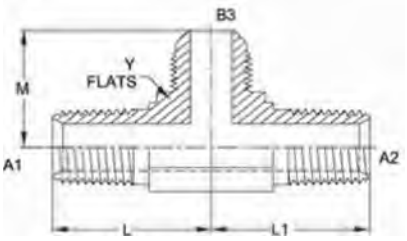

C-050

PART NO.SIZE	TUBE O.D.	A1 NPTF	A2 NPTF	B3 SAE37	A1 DRILL	A2 DRILL	B3 DRILL	L LfiTH	LI LGTH	M LGTH	Y FLATS
2610-04-04-04-FG	1/4	1/4-18	1/4-18	7/16-20	0.281	0.281	0.172	1.09	1.09	1.05	0.562
2610-04-04-06-FG	3/8	1/4-18	1/4-18	9/16-18	0.281	0.281	0.297	1.09	1.09	1.06	0.562
2610-06-06-06-FG	3/8	3/8-18	3/8-18	9/16-18	0.406	0.406	0.297	1.22	1.22	1.14	0.750
2610-06-06-08-FG	1/2	3/8-18	3/8-18	3/4-16	0.406	0.406	0.391	1.22	1.22	1.25	0.750
2610-08-08-08-FG	1/2	1/2-14	1/2-14	3/4-16	0.531	0.531	0.391	1.47	1.47	1.33	0.875
261008-08-10-FG	5/8	1/2-14	1/2-14	7/8-14	0.531	0.531	0.484	1.47	1.47	1.45	0.875
2610-12-12-12-FG	3/4	3/4-14	3/4-14	1-1/16-12	0.719	0.719	0.609	1.59	1.59	1.66	1.062
2610-12-12-16-FG	1	3/4-14	3/4-14	1-5/16-12	0.719	0.719	0.844	1.78	1.78	1.81	1.312
2610-16-16-16-FG	1	1-11-1/2	1-11-1/2	1-5/16-12	0.938	0.938	0.844	1.97	1.97	1.81	1.312

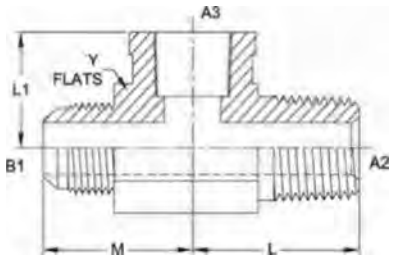

MJ-MP-FP Tee
2611 Series

PART NO.SIZE	TUBE O.D.	B1 SAE37	A2 NPTF	A3 NPTF	B1 DRILL	A2 DRILL	M LGTH	L LGTH	11 LGTH	Y FLATS
2611-04-02-02-FG	1/4	7/16-20	1/8-27	1/8-27	0.172	0.188	1.08	0.78	0.66	0.562
2611-04-04-02-FG	1/4	7/16-20	1/4-18	1/8-27	0.172	0.281	1.22	1.09	0.69	0.750
2611-04-04-04-FG	1/4	7/16-20	1/4-18	1/4-18	0.172	0.281	1.22	1.09	0.88	0.750
2611-04-08-06-FG	1/4	7/16-20	1/2-14	3/8-18	0.172	0.531	1.40	1.47	1.04	1.062
2611-06-04-04-FG	3/8	9/16-18	1/4-18	1/4-18	0.297	0.281	1.23	1.09	0.88	0.750
2611-06-06-06-FG	3/8	9/16-18	3/8-18	3/8-18	0.297	0.406	1.31	1.22	1.02	0.875
2611-08-06-06-FG	1/2	3/4-16	3/8-18	3/8-18	0.391	0.406	1.42	1.22	1.02	0.875
2611-08-08-08-FG	1/2	3/4-16	1/2-14	1/2-14	0.391	0.531	1.52	1.47	1.23	1.062
2611-10-08-08-FG	5/8	7/8-14	1/2-14	1/2-14	0.484	0.531	1.64	1.47	1.23	1.062
2611-12-12-12-FG	3/4	1-1/16-12	3/4-14	3/4-14	0.609	0.719	1.89	1.59	1.36	1.312
2611-16-16-16-FG	1	1-5/16-12	1-11-1/2	1-11-1/2	0.844	0.938	2.17	1.70	1.63	1.625
2611-20-20-20-FG	1-1/4	1-5/8-12	1-1/4-11-1/2	1-1/4-11-1/2	1.078	1.250	2.33	2.38	1.70	1.875

FP-FP-MJ Tee
2612 Series

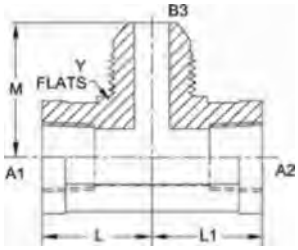

C-051

PART NO.SIZE	TUBE 0.0.	A1 NPTF	A2 NPTF	B3 SAE37	B3 DRILL	L LOTH	11 LOTH	M LGTH	Y FLATS
2612-02-02-04-FG	1/4	1/8-27	1/8-27	7/16-20	0.172	0.66	0.66	1.08	0.562
2612-04-04-06-FG	3/8	1/4-18	1/4-18	9/16-18	0.297	0.88	0.88	1.23	0.750
2612-06-06-08-FG	1/2	3/8-18	3/8-18	3/4-16	0.391	1.02	1.02	1.42	0.875
2612-08-08-08-FG	1/2	1/2-14	1/2-14	3/4-16	0.391	1.23	1.23	1.52	1.062
2612-08-08-10-FG	5/8	1/2-14	1/2-14	7/8-14	0.484	1.23	1.23	1.64	1.062
2612-12-12-12-FG	3/4	3/4-14	3/4-14	1-1/16-12	0.609	1.36	1.36	1.89	1.312
2612-16-16-16-FG	1	1-11-1/2	1-11-1/2	1-5/16-12	0.844	1.62	1.62	2.17	1.625

MP-FP-MJ Tee
2613 Series

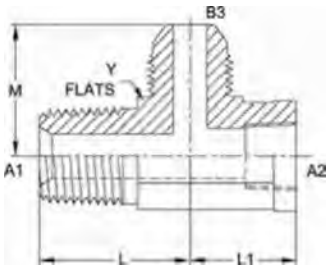

PART NO.SIZE	TUBE 0.0.	A1 NPTF	A2 NPTF	B3 SAE37	A1 DRILL	B3 DRILL	I LGTH	LI LGTH	M LGTH	Y FLATS
2613-02-02-04-FG	1/4	1/8-27	1/8-27	7/16-20	0.188	0.172	0.78	0.66	1.08	0.562
2613-04-04-06-FG	3/8	1/4-18	1/4-18	9/16-18	0.281	0.297	1.09	0.88	1.23	0.750
2613-06-06-06-FG	3/8	3/8-18	3/8-18	9/16-18	0.406	0.297	1.22	1.02	1.31	0.875
2613-06-06-08-FG	1/2	3/8-18	3/8-18	3/4-16	0.406	0.391	1.22	1.02	1.42	0.875
2613-08-08-10-FG	5/8	1/2-14	1/2-14	7/8-14	0.531	0.484	1.47	1.23	1.64	1.062
2613-12-12-12-FG	3/4	3/4-14	3/4-14	1-1/16-12	0.719	0.609	1.59	1.36	1.89	1.312
2613-16-16-16-FG	1	1-11-1/2	1-11-1/2	1-5/16-12	0.938	0.844	1.70	1.62	2.17	1.625

Tube Fittings & Adapters

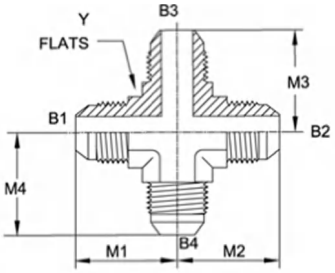

MJ-MJ-MJ-MJ Cross
2650 Series

SAE# 070501 / MS# 51517

C-052

PART NO.SIZE	TUBE O.D.	B1 SAE 37	B2 SAE 37	B3 SAE 37	B4 SAE 37	B1 DRILL	82 DRILL	B3 DRILL	B4 DRILL	MI LGTH	M2 LGTH	M3 LGTH	M4 LGTH	Y FIATS
2650-02-02-02-02-FG	1/8	5/16-24	5/16-24	5/16-24	5/16-24	0.062	0.062	0.062	0.062	0.77	0.77	0.77	0.77	0.438
2650-04-04-04-04-FG	1/4	7/16-20	7/16-20	7/16-20	7/16-20	0.172	0.172	0.172	0.172	0.89	0.89	0.89	0.89	0.438
2650-05-05-05-05-FG	5/16	1/2-20	1/2-20	1/2-20	1/2-20	0.234	0.234	0.234	0.234	0.95	0.95	0.95	0.95	0.562
2650-06-06-06-06-FG	3/8	9/16-18	9/16-18	9/16-18	9/16-18	0.297	0.297	0.297	0.297	1.06	1.06	1.06	1.06	0.562
2650-06-08-06-08-FG	3/8	9/16-18	3/4-16	9/16-18	3/4-16	0.297	0.391	0.297	0.391	1.14	1.25	1.14	1.25	0.75
2650-08-08-08-08-FG	1/2	3/4-16	3/4-16	3/4-16	3/4-16	0.391	0.391	0.391	0.391	1.25	1.25	1.25	1.25	0.75
2650-10-10-10-10-FG	5/8	7/8-14	7/8-14	7/8-14	7/8-14	0.484	0.484	0.484	0.484	1.45	1.45	1.45	1.45	0.875
2650-12-12-12-12-FG	3/4	1-1/16-12	1-1/16-12	1-1/16-12	1-1/16-12	0.609	0.609	0.609	0.609	1.66	1.66	1.66	1.66	1.062
2650-14-14-14-14-FG	7/8	1-3/16-12	1-3/16-12	1-3/16-12	1-3/16-12	0.719	0.719	0.719	0.719	1.80	1.80	1.80	1.80	1.312
2650-16-16-16-16-FG	1	1-5/16-12	1-5/16-12	1-5/16-12	1-5/16-12	0.844	0.844	0.844	0.844	1.81	1.81	1.81	1.81	1.312
2650-20-20-20-20-FG	1-1/4	1-5/8-12	1-5/8-12	1-5/8-12	1-5/8-12	1.078	1.078	1.078	1.078	2.06	2.06	2.06	2.06	1.625
2650-24-24-24-24-FG	1-1/2	1-7/8-12	1-7/8-12	1-7/8-12	1-7/8-12	1.312	1.312	1.312	1.312	2.33	2.33	2.33	2.33	1.875
2650-32-32-32-32-FG	2	2-1/2-12	2-1/2-12	2-1/2-12	2-1/2-12	1.781	1.781	1.781	1.781	3.06	3.06	3.06	3.06	2.5

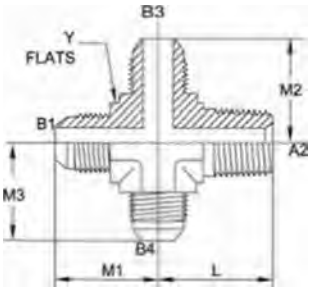

MJ-MP-MJ-MJ Cross
2651 Series

PART NO.SIZE	TUBE O.D.	B1 SAE 37	A2 NPTF	B3 SAE 37	B4 SAE 37	B1 DRILL	A2 DRILL	B3 DRILL	B4 DRILL	MI LGTH	L LGTH	M2 LGTH	M3 LGTH	Y FIATS
2651-04-04-04-04-FG	1/4	7/16-20	1/4-18	7/16-20	7/16-20	0.172	0.281	0.172	0.172	1.05	1.09	1.05	1.05	0.562
2651 -06-06-04-06- FG	3/8	9/16-18	3/8-18	7/16-20	9/16-18	0.297	0.406	0.172	0.297	1.14	1.22	1.12	1.14	0.750
2651 -06-04-06-06-FG	3/8	9/16-18	1/4-18	9/16-18	9/16-18	0.297	0.281	0.297	0.297	1.06	1.09	1.06	1.06	0.562
2651-06-06-06-06-FG	3/8	9/16-18	3/8-18	9/16-18	9/16-18	0.297	0.406	0.297	0.297	1.14	1.22	1.14	1.14	0.750
2651 -08-08-08-08-FG	1/2	3/4-16	1/2-14	3/4-16	3/4-16	0.391	0.531	0.391	0.391	1.33	1.47	1.33	1.33	0.875
2651-12-12-12-12-FG	3/4	1-1/16-12	3/4-14	1-1/16-12	1-1/16-12	0.609	0.719	0.609	0.609	1.66	1.59	1.66	1.66	1.062
2651-16-16-16-16-FG	1	1-5/16-12	1-11-1/2	1-5/16-12	1-5/16-12	0.844	0.938	0.844	0.844	1.81	1.97	1.81	1.81	1.312

MJ-MJ-MJ-FP Cross
2652 Series

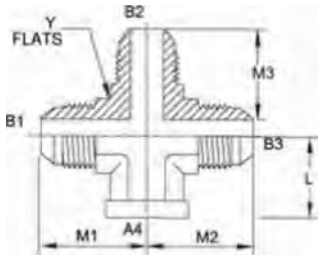

PART NO.SIZE	TUBE O.D.	B1 SAE37	B2 SAE37	B3 SAE37	A4 NPTF	B1 DRILL	B2 DRILL	B3 DRILL	MI LGTH	M2 LGTH	M3 LGTH	L LGTH	Y FLATS
2652-10-10-10-08-FG	5/8	7/8-14	7/8-14	7/8-14	1/2-14	0.484	0.484	0.484	1.64	1.64	1.64	1.23	1.062

MJ-MJ-MP-MP Cross
2653 Series

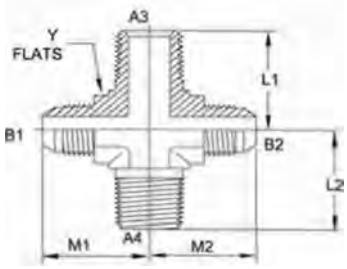

PART NO.SIZE	TUBE O.D.	B1 SAE37	B2 SAE37	A3 NPTF	A4 NPTF	B1 DRILL	B2 DRILL	A3 DRILL	A4 DRILL	MI LGTH	M2 LGTH	LI LGTH	12 LGTH	Y FLATS
2653-04-04-02-02-FG	1/4	7/16-20	7/16-20	1/8-27	1/8-27	0.172	0.172	0.188	0.188	0.89	0.89	0.78	0.78	0.438
2653-06-06-04-04-FG	3/8	9/16-18	9/16-18	1/4-18	1/4-18	0.297	0.297	0.281	0.281	1.06	1.06	1.09	1.09	0.562
2653-16-16-16-16-FG	1	1 5/16-12	1 5/16-12	1-11 1/2	1-11 1/2	0.844	0.844	0.938	0.938	1.81	1.81	1.97	1.97	1.312

MJ-MP-MJ-MP Cross
2654 Series

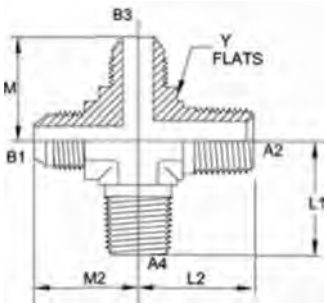

PART NO.SIZE	TUBE O.D.	B1 SAE37	A2 NPTF	B3 SAE37	A4 NPTF	B1 DRILL	A2 DRILL	A4 DRILL	B3 DRILL	MI LGTH	LI LGTH	MI LGTH	L2 LGTH	Y FLATS
2654-08-06-08-06-FG	1/2	3/4-16	3/8-18	3/4-16	3/8-18	0.391	0.406	0.391	0.406	1.25	1.22	1.25	1.22	0.750

MJ-MJ Bulkhead Straight 2700 Series

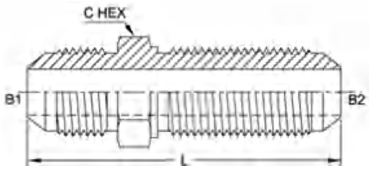

SAE# 070601 / MS# 51520

PART NO.SIZE	TUBE O.D.	B1 SAE 37	B2 SAE 37	B1 DRILL	B2 DRILL	L LGTH	C HEX
2700-02-02	1/8	5/16-24	5/16-24	0.062	0.062	1.87	0.562
2700-03-03	3/16	3/8-24	3/8-24	0.125	0.125	1.90	0.625
2700-04-04	1/4	7/16-20	7/16-20	0.172	0.172	2.07	0.688
2700-04-05	1/4	7/16-20	1/2-20	0.172	0.234	2.07	0.750
2700-04-06	1/4	7/16-20	9/16-18	0.297	0.812	2.17	0.172
2700-05-05	5/16	1/2-20	1/2-20	0.234	0.234	2.07	0.750
2700-06-04	3/8	9/16-18	7/16-20	0.297	0.172	2.10	0.812
2700-06-06	3/8	9/16-18	9/16-18	0.297	0.297	2.18	0.812
2700-08-08	1/2	3/4-16	3/4-16	0.391	0.391	2.44	1.000
2700-10-10	5/8	7/8-14	7/8-14	0.484	0.484	2.74	1.125
2700-12-12	3/4	1-1/16-12	1-1/16-12	0.609	0.609	3.09	1.375
2700-14-14	7/8	1-3/16-12	1-3/16-12	0.719	0.719	3.12	1.500
2700-16-12	1	1-5/16-12	1-1/16-12	0.844	0.609	3.14	1.625
2700-16-16	1	1-5/16-12	1-5/16-12	0.844	0.844	3.14	1.625
2700-20-20	1-1/4	1-5/8-12	1-5/8-12	1.078	1.078	3.31	1.875
2700-24-24	1-1/2	1-7/8-12	1-7/8-12	1.312	1.312	3.52	2.125
2700-32-32	2	2-1/2-12	2-1/2-12	1.781	1.781	4.20	2.750

MJ-MJ Bulkhead 90° 2701 Series

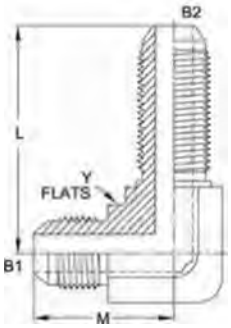

SAE# 070701 / MS# 51507

PART NO.SIZE	TUBE O.D.	B1 SAE 37	BZ SAE 37	B1 DRILL	B2 DRILL	M LGTH	L LGTH	Y FLATS
2701-02-02-FG	1/8	5/16-24	5/16-24	0.062	0.062	0.88	1.50	0.438
2701-03-03-FG	3/16	3/8-24	3/8-24	0.125	0.125	0.94	1.50	0.438
2701-04-04-FG	1/4	7/16-20	7/16-20	0.172	0.172	0.97	1.59	0.438
2701-05-05-FG	5/16	1/2-20	1/2-20	0.234	0.234	1.06	1.72	0.562
2701-06-06-FG	3/8	9/16-18	9/16-18	0.297	0.297	1.09	1.81	0.562
2701-08-08-FG	1/2	3/4-16	3/4-16	0.391	0.391	1.36	2.11	0.750
2701-10-10-FG	5/8	7/8-14	7/8-14	0.484	0.484	1.56	2.39	0.875
2701-12-12-FG	3/4	1-1/16-12	1-1/16-12	0.609	0.609	1.78	2.67	1.062
2701-12-16-FG	3/4	1-1/16-12	1-5/16-12	0.609	0.844	1.89	2.80	1.312
2701-14-14-FG	7/8	1-3/16-12	1-3/16-12	0.719	0.719	1.92	2.80	1.312
2701-16-12-FG	1	1-5/16-12	1-1/16-12	0.844	0.609	1.94	2.75	1.312
2701-16-16-FG	1	1-5/16-12	1-5/16-12	0.844	0.844	1.94	2.80	1.312
2701-20-20-FG	1-1/4	1-5/8-12	1-5/8-12	1.078	1.078	2.17	3.12	1.625
2701-24-24-FG	1-1/2	1-7/8-12	1-7/8-12	1.312	1.312	2.34	3.42	1.875

MJ-MJ Bulkhead 45°
2702 Series

SAE# 070801 / MS# 51509

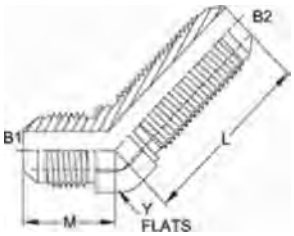

PART NO.SIZE	TUBE O.D.	B1 SAE37	82 SAE37	61 DRILL	B2 DRILL	M LGTH	L LGTH	Y FLATS
2702-03-03-FG	3/16	3/8-24	3/8-24	0.125	0.125	0.69	1.42	0.438
2702-04-04-FG	1/4	7/16-20	7/16-20	0.172	0.172	0.72	1.53	0.438
2702-05-05-FG	5/16	1/2-20	1/2-20	0.234	0.234	0.77	1.66	0.562
2702-06-06-FG	3/8	9/16-18	9/16-18	0.297	0.297	0.83	1.67	0.562
2702-08-08-FG	1/2	3/4-16	3/4-16	0.391	0.391	0.98	1.94	0.750
2702-10-10-FG	5/8	7/8-14	7/8-14	0.484	0.484	1.11	2.17	0.875
2702-12-12-FG	3/4	1-1/16-12	1-1/16-12	0.609	0.609	1.28	2.44	1.062
2702-14-14-FG	7/8	1-3/16-12	1-3/16-12	0.719	0.719	1.45	2.50	1.312
2702-16-16-FG	1	1-5/16-12	1-5/16-12	0.844	0.844	1.47	2.56	1.312
2702-20-20-FG	1-1/4	1-5/8-12	1-5/8-12	1.078	1.078	1.59	2.65	1.625
2702-24-24-FG	1-1/2	1-7/8-12	1-7/8-12	1.312	1.312	1.78	2.67	1.875
2702-32-32-FG	2	2-1/2-12	2-1/2-12	1.781	1.781	2.22	2.91	2.500

MJ-MJ-MJ Bulkhead Branch Tee 2703 Series

SAE# 070959 / MS# 51515

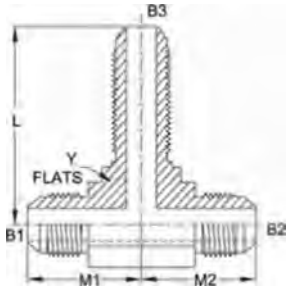

PART NO.SIZE	TUBE O.D.	B1 SAE37	B2 SAE37	B3 SAE37	B1 DRILL	B2 DRILL	B3 DRILL	MI LGTH	M2 LGTH	I LGTH	Y FLATS
2703-03-03-03-FG	3/16	3/8-24	3/8-24	3/8-24	0.125	0.125	0.125	0.94	0.94	1.50	0.438
2703-04-04-04-FG	1/4	7/16-20	7/16-20	7/16-20	0.172	0.172	0.172	0.97	0.97	1.59	0.438
2703-04-04-06-FG	1/4	7/16-20	7/16-20	9/16-18	0.172	0.172	0.297	1.08	1.08	1.81	0.562
2703-05-05-05-FG	5/16	1/2-20	1/2-20	1/2-20	0.234	0.234	0.234	1.06	1.06	1.72	0.562
2703-06-06-06-FG	3/8	9/16-18	9/16-18	9/16-18	0.297	0.297	0.297	1.09	1.09	1.81	0.562
2703-08-08-08-FG	1/2	3/4-16	3/4-16	3/4-16	0.391	0.391	0.391	1.36	1.36	2.11	0.750
2703-10-10-10-FG	5/8	7/8-14	7/8-14	7/8-14	0.484	0.484	0.484	1.56	1.56	2.39	0.875
2703-12-12-12-FG	3/4	1-1/16-12	1-1/16-12	1-1/16-12	0.609	0.609	0.609	1.78	1.78	2.67	1.062
2703-12-12-16-FG	3/4	1-1/16-12	1-1/16-12	1-5/16-12	0.609	0.609	0.844	1.89	1.89	2.80	1.312
2703-14-14-14-FG	7/8	1-3/16-12	1-3/16-12	1-3/16-12	0.719	0.719	0.719	1.92	1.92	2.80	1.312
2703-16-16-16-FG	1	1-5/16-12	1-5/16-12	1-5/16-12	0.844	0.844	0.844	1.94	1.94	2.80	1.312
2703-20-20-20-FG	1-1/4	1-5/8-12	1-5/8-12	1-5/8-12	1.078	1.078	1.078	2.17	2.17	3.12	1.625
2703-24-24-24-FG	1-1/2	1-7/8-12	1-7/8-12	1-7/8-12	1.312	1.312	1.312	2.34	2.34	3.42	1.875

MJ-MJ-MJ Bulkhead Run Tee 2704 Series

SAE# 070958 / MS# 51516

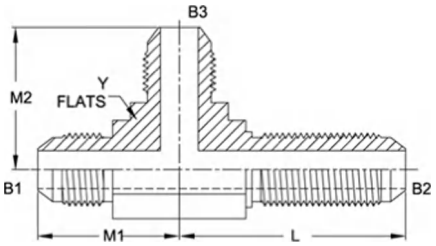

PART NO.SIZE	TUBE O.D.	B1 SAE37	B2 SAE37	B3 SAE37	B1 DRILL	B2 DRILL	B3 DRILL	MI LGTH	L LGTH	M2 LGTH	Y FLATS
2704-03-03-03- FG	3/16	3/8-24	3/8-24	3/8-24	0.125	0.125	0.125	0.94	1.50	0.94	0.438
2704-04-04-04-FG	1/4	7/16-20	7/16-20	7/16-20	0.172	0.172	0.172	0.97	1.59	0.97	0.438
2704-05-05-05-FG	5/16	1/2-20	1/2-20	1/2-20	0.234	0.234	0.234	1.06	1.72	1.06	0.562
2704-06-06-06-FG	3/8	9/16-18	9/16-18	9/16-18	0.297	0.297	0.297	1.09	1.81	1.09	0.562
2704-08-08-08-FG	1/2	3/4-16	3/4-16	3/4-16	0.391	0.391	0.391	1.36	2.11	1.36	0.750
2704-10-10-10-FG	5/8	7/8-14	7/8-14	7/8-14	0.484	0.484	0.484	1.56	2.39	1.56	0.875
2704-12-12-12-FG	3/4	1-1/16-12	1-1/16-12	1-1/16-12	0.609	0.609	0.609	1.78	2.67	1.78	1.062
2704-16-16-16-FG	1	1-5/16-12	1-5/16-12	1-5/16-12	0.844	0.844	0.844	1.94	2.80	1.94	1.312
2704-20-20-20-FG	1-1/4	1-5/8-12	1-5/8-12	1-5/8-12	1.078	1.078	1.078	2.17	3.12	2.17	1.625
2704-24-24-24-FG	1-1/2	1-7/8-12	1-7/8-12	1-7/8-12	1.312	1.312	1.312	2.34	3.42	2.34	1.875

FP-MJ Bulkhead Straight 2705 Series

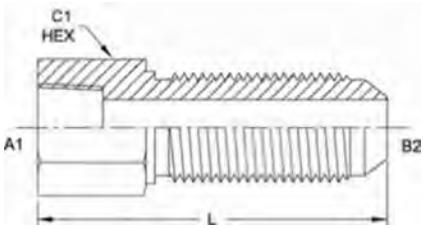

PART NO.SIZE	TUBE O.D.	A1 NPTF	B2 SAE37	B2 DRILL	L LGTH	CI HEX
2705-02-04	1/4	1/8-27	7/16-20	0.172	1.89	0.688
2705-02-05	5/16	1/8-27	1/2-20	0.234	1.89	0.750
2705-04-04	1/4	1/4-18	7/16-20	0.172	2.09	0.750
2705-04-06	3/8	1/4-18	9/16-18	0.297	2.17	0.812
2705-06-06	3/8	3/8-18	9/16-18	0.297	2.23	0.875
2705-06-08	1/2	3/8-18	3/4-16	0.391	2.39	1.000
2705-08-06	3/8	1/2-14	9/16-18	0.297	2.46	1.125
2705-08-08	1/2	1/2-14	3/4-16	0.391	2.62	1.125
2705-08-10	5/8	1/2-14	7/8-14	0.484	2.76	1.125
2705-12-12	3/4	3/4-14	1-1/16-12	0.609	2.99	1.375
2705-12-14	7/8	3/4-14	1-3/16-12	0.719	2.99	1.500
2705-16-16	1	1-11-1/2	1-5/16-12	0.844	3.24	1.625
2705-20-20	1-1/4	1-1/4-11-1/2	1-5/8-12	1.078	3.38	2.000
2705-24-24	1-1/2	1-1/2-11-1/2	1-7/8-12	1.312	3.40	2.375

MP-MJ Bulkhead Straight 2706 Series

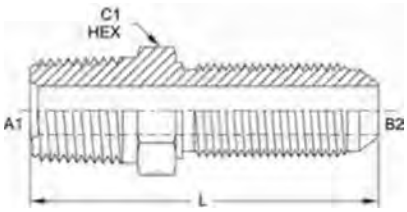

PART NO.SIZE	TUBE O.D.	A1 NPTF	B2 SAE37	A1 DRILL	B2 DRILL	L L6TH	CI HEX
2706-02-04	1/4	1/8-27	7/16-20	0.188	0.172	1.90	0.688
2706-04-02	1/8	1/4-18	5/16-24	0.281	0.062	1.97	0.562
2706-04-04	1/4	1/4-18	7/16-20	0.281	0.172	2.11	0.688
2706-04-06	3/8	1/4-18	9/16-18	0.281	0.297	2.19	0.812
2706-06-06	3/8	3/8-18	9/16-18	0.406	0.297	2.19	0.812
2706-06-08	1/2	3/8-18	3/4-16	0.406	0.391	2.35	1.000
2706-08-06	3/8	1/2-14	9/16-18	0.531	0.297	2.44	0.875
2706-08-08	1/2	1/2-14	3/4-16	0.531	0.391	2.60	1.000
2706-08-10	5/8	1/2-14	7/8-14	0.531	0.484	2.74	1.125
2706-08-12	3/4	1/2-14	1-1/16-12	0.531	0.609	2.91	1.375
2706-12-12	3/4	3/4-14	1-1/16-12	0.719	0.609	2.98	1.375
2706-12-16	1	3/4-14	1-5/16-12	0.719	0.844	2.98	1.625
2706-16-16	1	1-11-1/2	1-5/16-12	0.938	0.844	3.17	1.625
2706-20-20	1-1/4	1-1/4-11-1/2	1-5/8-12	1.250	1.078	3.33	1.875
2706-24-24	1-1/2	1-1/2-11-1/2	1-7/8-12	1.500	1.312	3.44	2.125
2706-32-32	2	2-11-1/2	2-1/2-12	1.938	1.781	3.90	2.750

MP-FP Low Profile 90° 3051 Series

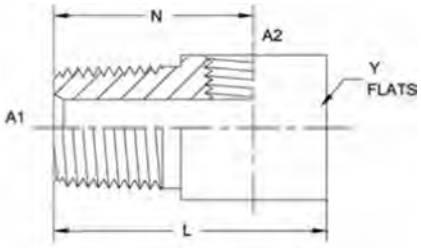

PART NO.SIZE	PIPE O.D.	A1 NPTF	A2 NPTF	L LGTH	N LGTH	Y FLATS
3051-02-02	1/8	1/8-27	1/8-27	1.020	0.75	0.500
3051-04-04	1/4	1/4-18	1/4-18	2.007	1.57	0.875
3051-06-06	3/8	3/8-18	3/8-18	2.007	1.57	0.875
3051-08-08	1/2	1/2-14	1/2-14	2.562	2.00	1.125
3051-12-12	3/4	1 1/16-12	3/4-14	2.937	2.25	1.375
3051-16-16	1	1-11-1/2	1-11-1/2	2.585	1.77	1.625

MAORB-ORB Straight
3474-NWO Series

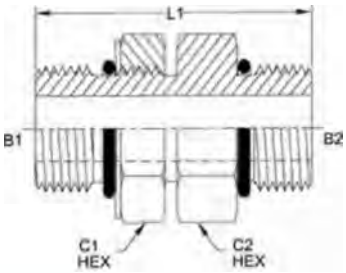

PART P/N	B1 TUBE O.D.	B2TUBE O.D.	B1 AORB	82 ORB	B1 DRILL	82 DRILL	LI LGTH	CI HEX	C2 HEX
3474-04-04-NWO	1/4	1/4	7/16-20	7/16-20	0.172	0.172	1.47	0.562	0.562
3474-05-05-NWO	5/16	5/16	1/2-20	1/2-20	0.234	0.234	1.56	0.625	0.625
3474-06-04-NWO	3/8	3/8	9/16-18	7/16-20	0.297	0.172	1.38	0.688	0.688
3474-06-06-NWO	3/8	3/8	9/16-18	9/16-18	0.297	0.297	1.56	0.688	0.688
3474-08-06-NWO	1/2	1/2	3/4-16	9/16-18	0.391	0.297	1.72	0.875	0.875
3474-08-08-NWO	1/2	1/2	3/4-16	3/4-16	0.391	0.391	1.76	0.875	0.875
3474-08-12-NWO	3/4	3/4	3/4-16	1-1/16-12	0.391	0.609	1.97	0.875	1.250
3474-10-08-N WO	5/8	5/8	7/8-14	3/4-16	0.484	0.391	1.75	1.000	1.000
3474-IO-IO-NWO	5/8	5/8	7/8-14	7/8-14	0.484	0.484	2.04	1.000	1.000
3474-12-08-N WO	3/4	3/4	1-1/16-12	3/4-16	0.609	0.391	2.10	1.250	1.125
3474-12-10-NWO	3/4	3/4	1-1/16-12	7/8-14	0.609	0.484	2.13	1.250	1.250
3474-12-12-NWO	3/4	3/4	1-1/16-12	1-1/16-12	0.609	0.609	2.33	1.250	1.250
3474-16-12-NWO	1	3/4	1-5/16-12	1-1/16-12	0.844	0.609	2.36	1.500	1.375
3474-16-16-NWO	1	1	1-5/16-12	1-5/16-12	0.844	0.844	2.36	1.500	1.500
3474-20-20-NWO	1-1/4	1-1/4	1-5/8-12	1-5/8-12	1.078	1.078	2.31	1.875	1.875
3474-24-16-NWO	1-1/2	1	1-7/8-12	1-5/16-12	1.312	0.844	2.42	2.125	2.000
3474-24-24-NWO	1-1/2	1-1/2	1-7/8-12	1-7/8-12	1.312	1.312	2.42	2.125	2.125
3474-32-32-NWO	2	2	2-1/2-12	2-1/2-12	1.781	1.781	2.59	2.750	2.750

MAORB-ORB XX-Long Straight
3474-LLL-NWO Series

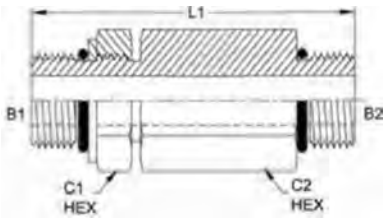

PART NO.SIZE	TUBE O.D.	B1 AORB	B2 ORB	B1 DRILL	B2 DRILL	11 LGTH	CI HEX	C2 HEX
3474-LLL-04-04-NWO	[V4]	7/16-20	7/16-20	0.172	0.172	3.00	0.562	0.562

Buna O-ring
4000 Series

SAE# J 51 5 Type I CH
MS# 28778

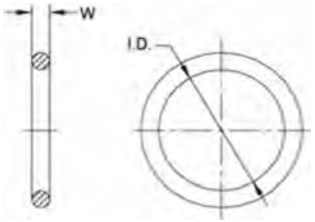

PART NO.SIZE	TUBE O.D.	W WIDTH	I.D
4000-02	1/8	0.064	0.239
4000-03	3/16	0.064	0.301
4000-04	1/4	0.072	0.351
4000-05	5/16	0.072	0.414
4000-06	3/8	0.078	0.468
4000-08	1/2	0.087	0.644
4000-10	5/8	0.097	0.755
4000-12	3/4	0.116	0.924
4000-14	7/8	0.116	1.048
4000-16	1	0.116	1.171
4000-20	1-1/4	0.118	1.475
4000-24	1-1/2	0.118	1.720
4000-32	2	0.118	2.337

Viton O-ring
4001 Series

SAE# J 51 5 Type III HK

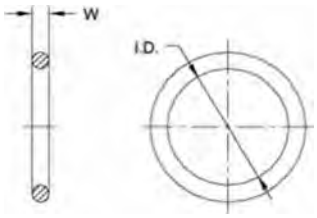

PART NO.SIZE	TUBE O.D.	W WIDTH	I.D
4001-02	1/8	0.064	0.239
4001-03	3/16	0.064	0.301
4001-04	1/4	0.072	0.351
4001-06	3/8	0.078	0.468
4001-08	1/2	0.087	0.644
4001-10	5/8	0.097	0.755
4001-12	3/4	0.116	0.924
4001-14	7/8	0.116	1.048
4004-16	1	0.116	1.171
4001-20	1-1/4	0.118	1.475
4001-24	1-1/2	0.118	1.720
4001-32	2	0.118	2.337

Flange O-ring
4005 Series

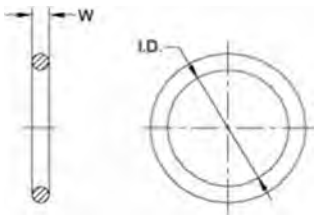

PART NO.SIZE	TUBE O.D.	W WIDTH	I.D
4005-08	1/2	0.14	0.734
4005-10	5/8	0.14	
4005-12	3/4	0.14	0.984
4005-16	1	0.14	1.296
4005-20	1-1/4	0.14	1.484
4005-24	1-1/2	0.14	1.859
4005-32	2	0.14	2.234
4005-40	2-1/2	0.14	2.734

Tube Fittings & Adapters

HB-MP Straight
4404 Series

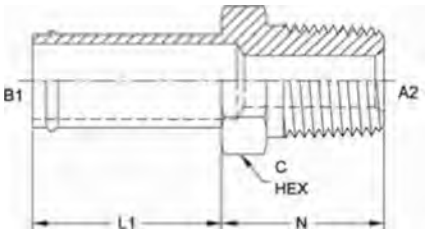

PART NO.SIZE	B1 TUBE O.D.	A2 NPTF	B1 DRILL	A2 DRILL	11 LGTH	N LGTH	C HEX
4404-04-02	1/4	1/8-27	0.189	0.188	1.50	0.58	0.438
4404-04-04	1/4	1/4-18	0.189	0.281	1.50	0.85	0.562
4404-04-06	1/4	3/8-18	0.189	0.406	1.50	0.85	0.750
4404-05-02	5/16	1/8-27	0.252	0.188	1.50	0.58	0.438
4404-05-04	5/16	1/4-18	0.252	0.281	1.50	0.85	0.562
4404-05-06	5/16	3/8-18	0.252	0.406	1.50	0.85	0.750
4404-06-02	3/8	1/8-27	0.295	0.188	1.50	0.63	0.625
4404-06-04	3/8	1/4-18	0.295	0.281	1.50	0.85	0.625
4404-06-06	3/8	3/8-18	0.295	0.406	1.50	0.85	0.750
4404-08-04	1/2	1/4-18	0.406	0.281	1.50	0.85	0.625
4404-08-06	1/2	3/8-18	0.406	0.406	1.50	0.85	0.750
4404-08-08	1/2	1/2-14	0.406	0.531	1.50	1.10	0.937
4404-08-12	1/2	3/4-14	0.406	0.719	1.50	1.17	1.125
4404-10-04	5/8	1/4-18	0.500	0.281	1.50	0.85	0.750
4404-10-06	5/8	3/8-18	0.500	0.406	1.50	0.85	0.750
4404-10-08	5/8	1/2-14	0.500	0.531	1.50	1.10	0.937
4404-10-12	5/8	3/4-14	0.500	0.719	1.50	1.16	1.125
4404-10-16	1	1-11-1/2	0.500	0.938	1.50	1.36	1.375
4404-12-06	3/4	3/8-18	0.626	0.406	1.50	0.85	0.937
4404-12-08	3/4	1/2-14	0.626	0.531	1.50	1.10	0.937
4404-12-12	3/4	3/4-14	0.626	0.719	1.50	1.17	1.125
4404-12-16	3/4	1-11-1/2	0.626	0.938	1.50	1.36	1.375
4404-16-08	1	1/2-14	0.843	0.531	1.50	1.13	1.250
4404-16-12	1	3/4-14	0.843	0.719	1.50	1.17	1.250
4404-16-16	1	1-11-1/2	0.843	0.938	1.50	1.36	1.375
4404-16-24	1	1-1/2-11-1/2	0.843	1.500	1.50	1.57	2.000
4404-20-12	1-1/4	3/4-14	1.094	0.719	1.50	1.17	1.375
4404-20-16	1-1/4	1-11-1/2	1.094	0.938	1.50	1.36	1.375
4404-20-20	1-1/4	1-1/4-11-1/2	1.094	1.250	1.50	1.47	1.750
4404-20-24	1-1/4	1-1/2-11-1/2	1.094	1.500	1.50	1.57	2.000
4404-24-20	1-1/2	1-1/4-11-1/2	1.343	1.250	1.50	1.47	1.750
4404-24-24	1-1/2	1-1/2-11-1/2	1.343	1.500	1.50	1.57	2.000
4404-32-32	2	2-11-1/2	1.843	1.938	1.50	1.75	2.500

HB-MP 90° Straight
4501 Series

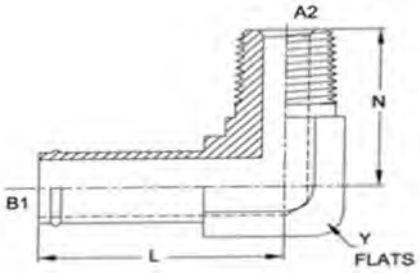

PART NO.SIZE	TUBE B1 O.D.	A2 NPTF	81 DRILL	A2 DRILL	L LGTH	N LGTH	Y FLATS
4501-04-02-FG	1/4	1/8-27	0.189	0.188	1.750	0.781	0.500
4501-04-04-FG	1/4	1/4-18	0.189	0.281	1.810	1.060	0.625
4501-05-02-FG	5/16	1/8-27	0.252	0.188	1.750	0.781	0.500
4501-06-02-FG	3/8	1/8-27	0.295	0.188	1.750	0.781	0.500
4501-06-04-FG	3/8	1/4-18	0.295	0.281	1.812	1.093	0.625
4501-06-06-FG	3/8	3/8-18	0.295	0.406	1.890	1.220	0.812
4501-06-08-FG	3/8	1/2-14	0.295	0.531	1.970	1.460	0.937
4501-08-04-FG	1/2	1/4-18	0.406	0.281	1.810	1.100	0.625
4501-08-06-FG	1/2	3/8-18	0.406	0.406	1.906	1.218	0.812
4501-08-08-FG	1/2	1/2-14	0.406	0.531	1.980	1.470	0.937
4501-08-12-FG	1/2	3/4-14	0.406	0.719	1.968	2.062	1.125
4501-10-06-FG	5/8	3/8-18	0.500	0.406	1.968	1.278	0.937
4501-10-08-FG	5/8	1/2-14	0.500	0.531	1.968	1.468	0.937
4501-10-12-FG	5/8	3/4-14	0.500	0.719	2.060	1.600	1.125
4501-12-06-FG	3/4	3/8-18	0.626	0.406	1.900	1.220	0.812
4501-12-08-FG	3/4	1/2-14	0.626	0.531	1.970	1.470	0.937
4501-12-12-FG	3/4	3/4-14	0.626	0.719	2.062	1.593	1.125
4501-12-16-FG	3/4	1-11-1/2	0.626	0.938	2.190	1.980	1.375
4501-16-08-FG	1	1/2-14	0.843	0.531	2.053	1.561	1.125
4501-16-12-FG	1	3/4-14	0.843	0.719	2.080	1.600	1.125
4501-16-16-FG	1	1-11-1/2	0.843	0.938	2.187	1.968	1.375
4501-16-20-FG	1	1-1/4-11-1/2	0.843	1.250	2.380	2.380	1.750
4501-16-24-FG	1	1-1/2-11-1/2	0.843	1.500	2.520	2.640	2.000
4501-20-16-FG	1-1/4	1-11-1/2	1.094	0.938	2.200	1.980	1.375
4501-20-20-FG	1-1/4	1-1/4-11-1/2	1.094	1.250	2.375	2.375	1.750
4501-20-24-FG	1-1/4	1-1/2-11-1/2	1.094	1.500	2.500	2.640	2.000
4501-24-16-FG	1-1/2	1-11-1/2	1.343	0.938	2.380	2.160	1.750
4501-24-20-FG	1-1/2	1-1/4-11-1/2	1.343	1.250	2.380	2.380	1.750
4501-24-24-FG	1-1/2	1-1/2-11-1/2	1.343	1.500	2.500	2.640	2.000
4501-32-32-FG	2	2-11-1/2	1.843	1.938	2.812	3.000	2.625

Tube Fittings & Adapters

HB-MP 45°
4503 Series

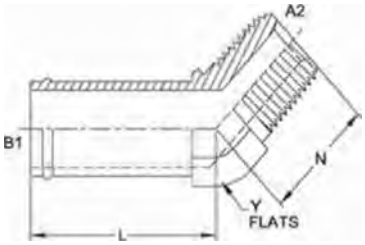

C-062

PART NO.SIZE	B1 TUBE O.D.	A2 NPTF	B1 DRILL	A2 DRILL	I LOTH	N LOTH	Y FLATS
4503-04-02-FG	1/4	1/8-27	0.189	0.188	1.562	0.640	0.500
4503-04-04-FG	1/4	1/4-18	0.189	0.281	1.810	0.830	0.625
4503-05-02-FG	5/16	1/8-27	0.252	0.188	1.650	0.640	0.500
4503-06-04-FG	3/8	1/4-18	0.295	0.281	1.625	0.859	0.625
4503-06-06-FG	3/8	3/8-18	0.295	0.406	1.710	0.950	0.812
4503-08-04-FG	1/2	1/4-18	0.406	0.281	1.710	0.830	0.625
4503-08-06-FG	1/2	3/8-18	0.406	0.406	1.687	0.953	0.812
4503-08-08-FG	1/2	1/2-14	0.406	0.531	1.740	1.180	0.937
4503-10-06-FG	5/8	3/8-18	0.500	0.406	1.718	0.981	0.937
4503-10-08-FG	5/8	1/2-14	0.500	0.531	1.718	1.171	0.937
4503-10-12-FG	5/8	3/4-14	0.500	0.719	1.830	1.220	1.125
4503-12-08-FG	3/4	1/2-14	0.626	0.531	1.760	1.170	0.937
4503-12-12-FG	3/4	3/4-14	0.626	0.719	1.718	1.203	1.125
4503-12-16-FG	3/4	1-11 1/2	0.626	0.938	2.100	1.540	1.375
4503-16-12-FG	1	3/4-14	0.843	0.719	1.750	1.203	1.125
4503-16-16-FG	1	1-11 1/2	0.843	0.938	1.750	1.484	1.375
4503-16-20-FG	1	1 1/4-11 1/2	0.843	1.250	2.070	1.620	1.750
4503-20-16-FG	1-1/4	1-11 1/2	1.094	0.938	1.740	1.570	1.375
4503-20-20-FG	1-1/4	1 1/4-11 1/2	1.094	1.250	1.812	1.671	1.750
4503-24-20-FG	1-1/2	1 1/4-11 1/2	1.343	1.250	1.930	1.620	1.750
4503-24-24-FG	1-1/2	1 1/2-11 1/2	1.343	1.500	1.875	1.765	2.000
4503-32-32-FG	2	2-11 1/2	1.843	1.938	2.000	2.109	2.500

HB-HB-HB Tee
4504 Series

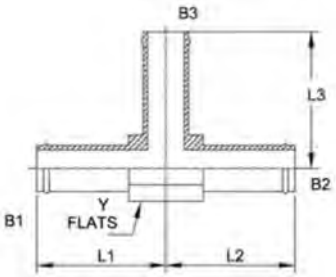

PART NO.SIZE	B1 TUBE O.D.	B2TUBE O.D.	B3 TUBE O.D.	B1 DRILL	B2 DRILL	B3 DRILL	LI LGTH	L2 LGTH	L3 LGTH	Y FLATS
4504-04-04-04-FG	1/4	1/4	1/4	0.189	0.189	0.189	1.75	1.75	1.75	0.500
4504-06-06-06-FG	3/8	3/8	3/8	0.295	0.295	0.295	1.75	1.75	1.75	0.500
4504-08-08-08-FG	1/2	1/2	1/2	0.406	0.406	0.406	1.75	1.75	1.75	0.812

HB-MP-HB Tee
4505 Series

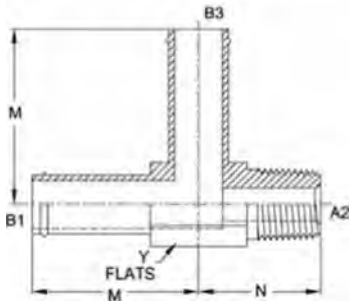

C-063

PART NO. SIZE	81 TUBE O.D.	A2 NPTF	B3 TUBE O.D.	B1 DRILL	A2 DRILL	B3 DRILL	M LGTH	N LGTH	Y FLATS
4505-24-24-24-FG	1 -1/2	1 -1/2-11 1/2	1 -1/2	1.343	1.500	1.343	2.5	2.62	2.000

HB-HB-MP Tee
4506 Series

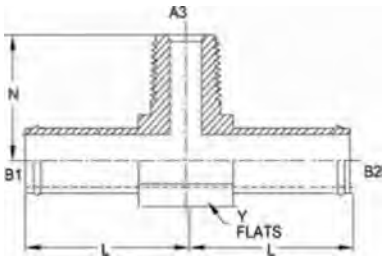

PART NO. SIZE	B1 TUBE O.D.	B2 TUBE O.D.	A3 NPTF	B1 DRILL	B2 DRILL	A3 DRILL	I LGTH	N LGTH	Y FLATS
4506-08-08-06-FG	1/2	1/2	3/8-18	0.406	0.406	0.406	1.920	1.220	0.812

Tube Fittings & Adapters

HB-MAORB 90°
4601-NWO Series

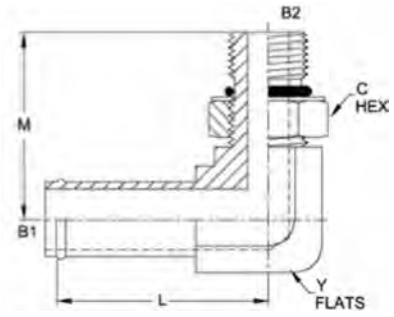

C-064

PART NO. SIZE	TUBE B1 0.0.	B2 AORB	B1 DRILL	B2 DRILL	L LBTH	M LBTH	C HEX	Y FLATS
4601 -04-04-N WO-FG	1/4	7/16-20	0.189	0.172	1.750	1.031	0.563	0.500
4601 -04-06-N WO-FG	1/4	9/16-18	0.189	0.297	1.810	1.270	0.688	0.625
4601 -04-08-N WO-FG	1/4	3/4-16	0.189	0.391	1.980	1.449	0.875	0.750
4601-05-04-N WO-FG	5/16	7/16-20	0.252	0.172	1.770	1.010	0.563	0.500
4601-05-06-N WO-FG	5/16	9/16-18	0.252	0.297	1.810	1.240	0.688	0.562
4601-06-04-N WO-FG	3/8	7/16-20	0.295	0.172	1.810	1.190	0.563	0.438
4601 -06-06-NWO-FG	3/8	9/16-18	0.295	0.297	1.812	1.250	0.688	0.625
4601-06-08-N WO-FG	3/8	3/4-16	0.295	0.391	1.890	1.470	0.875	0.812
4601-08-06-N WO-FG	1/2	9/16-18	0.406	0.297	1.906	1.812	0.688	0.812
4601-08-08-N WO-FG	1/2	3/4-16	0.406	0.391	1.906	1.453	0.875	0.812
4601-10-08-N WO-FG	5/8	3/4-16	0.500	0.391	1.900	1.450	0.875	0.812
4601-10-10-N WO-FG	5/8	7/8-14	0.500	0.484	1.968	1.703	1.000	0.937
4601-10-12-N WO-FG	5/8	1 1/16-12	0.500	0.609	2.070	1.930	1.250	1.125
4601-12-08-N WO-FG	3/4	3/4-16	0.626	0.391	1.890	1.450	0.875	0.812
4601 -12-10-N WO-FG	3/4	7/8-14	0.626	0.484	1.930	1.680	1.000	0.937
4601 -12-12-N WO-FG	3/4	1 1/16-12	0.626	0.609	2.062	1.937	1.250	1.125
4601-12-16-N WO-FG	3/4	1 5/16-12	0.626	0.844	2.190	2.040	1.500	1.375
4601-14-14-N WO-FG	7/8	1 3/16-12	0.719	0.719	2.125	2.000	1.375	1.250
4601-14-16-N WO-FG	7/8	1-5/16-12	0.719	0.844	2.300	2.039	1.500	1.312
4601 -16-08-N WO-FG	1	3/4-16	0.843	0.391	2.050	1.600	0.875	1.125
4601 -16-10-N WO-FG	1	7/8-14	0.843	0.484	2.375	2.000	1.000	1.312
4601 -16-12-N WO-FG	1	1 1/16-12	0.843	0.609	2.020	1.950	1.250	1.125
4601-16-14-N WO-FG	1	1 3/16-12	0.843	0.719	2.110	2.000	1.375	1.250
4601 -16-16-N WO-FG	1	1 5/16-12	0.843	0.844	2.187	2.046	1.500	1.375
4601-16-20-N WO-FG	1	1 5/8-12	0.843	1.078	2.340	2.250	1.875	1.750
4601-16-24-N WO-FG	1	1 7/8-12	0.843	1.312	2.470	2.400	2.125	2.000
4601-20-12-N WO-FG	1-1/4	1 1/16-12	1.094	0.609	2.400	2.000	1.250	1.625
4601-20-16-N WO-FG	1-1/4	1 5/16-12	1.094	0.844	2.200	2.040	1.500	1.375
4601-20-20-N WO-FG	1-1/4	1 5/8-12	1.094	1.078	2.375	2.250	1.875	1.750
4601 -20-24-NWO-FG	1-1/4	1 7/8-12	1.094	1.312	2.500	2.400	2.125	2.000
4601-24-16-NWO-FG	1-1/2	1 5/16-12	1.343	0.844	2.320	2.170	1.500	1.625
4601-24-20-N WO-FG	1-1/2	1 5/8-12	1.343	1.078	2.370	2.240	1.875	1.750
4601-24-24-N WO-FG	1-1/2	1 7/8-12	1.343	1.312	2.500	2.390	2.125	2.000
4601-32-20-N WO-FG	2	1-5/8-12	1.843	1.078	2.726	2.467	1.875	2.125
4601-32-24-N WO-FG	2	1-7/8-12	1.843	1.312	2.726	2.467	2.125	2.125
4601-32-32-N WO-FG	2	2 1/2-12	1.843	1.781	2.812	2.890	2.750	2.625

HB-MAORB 45°
4603-NWO Series

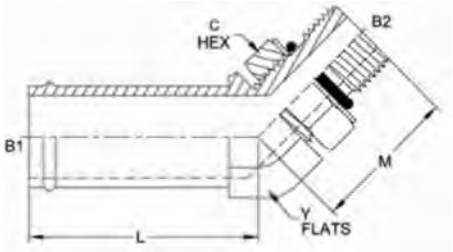

PART NO. SIZE	B1 TUBE O.D.	B2 AORB	B1 BRILL	B2 BRILL	I LCTH	M LGTH	C HEX	Y FLATS
4603-04-04-NWO-FG	1/4	7/16-20	0.189	0.172	1.562	1.046	0.563	0.500
4603-06-04-NWO-FG	3/8	7/16-20	0.295	0.172	1.593	1.046	0.563	0.500
4603-06-06-NWO-FG	3/8	9/16-18	0.295	0.297	1.593	1.140	0.688	0.625
4603-08-08-NWO-FG	1/2	3/4-16	0.406	0.391	1.625	1.296	0.875	0.812
4603-08-10-NWO-FG	1/2	7/8-14	0.406	0.484	1.870	1.520	1.000	0.937
4603-10-08-NWO-FG	5/8	3/4-16	0.500	0.391	1.700	1.320	0.875	0.812
4603-10-10-NWO-FG	5/8	7/8-14	0.500	0.484	1.609	1.515	1.000	0.937
4603-10-12-NWO-FG	5/8	1-1/16-12	0.500	0.609	1.880	1.740	1.250	1.125
4603-12-08-NWO-FG	3/4	3/4-16	0.626	0.391	1.643	1.300	0.875	0.812
4603-12-10-NWO-FG	3/4	7/8-14	0.626	0.484	1.650	1.590	1.000	0.937
4603-12-12-NWO-FG	3/4	1-1/16-12	0.626	0.609	1.703	1.734	1.250	1.125
4603-12-16-NWO-FG	3/4	1-5/16-12	0.626	0.844	1.859	1.859	1.500	1.375
4603-16-12-NWO-FG	1	1-1/16-12	0.843	0.609	1.780	1.720	1.250	1.125
4603-16-14-NWO-FG	1	1-3/16-12	0.843	0.719	1.850	1.830	1.375	1.250
4603-16-16-NWO-FG	1	1-5/16-12	0.843	0.844	1.859	1.859	1.500	1.375
4603-20-12-NWO-FG	1-1/4	1-1/16-12	1.094	0.609	1.870	1.878	1.250	1.375
4603-20-16-NWO-FG	1-1/4	1-5/16-12	1.094	0.844	1.870	1.900	1.500	1.375
4603-20-20-NWO-FG	1-1/4	1-5/8-12	1.094	1.078	1.921	1.906	1.875	1.750
4603-24-16-NWO-FG	1-1/2	1-5/16-12	1.343	0.844	1.968	1.857	1.500	1.625
4603-24-20-NWO-FG	1-1/2	1-5/8-12	1.343	1.078	1.990	1.857	1.875	1.750
4603-24-24-NWO-FG	1-1/2	1-7/8-12	1.343	1.312	1.968	1.906	2.125	2.000
4603-32-32-NWO-FG	2	2-1/2-12	1.843	1.781	2.180	1.859	2.750	2.625

HB-MORB Straight
4604-0 Series

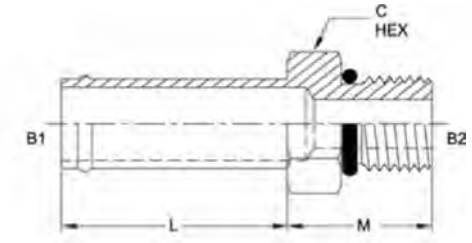

PART NO. SIZE	TUBE B1 0.0.	B2 ORB	B1 DRILL	B2 DRILL	L LOTH	M LGTH	C HEX
4604-04-04-0	1/4	7/16-20	0.189	0.172	1.500	0.600	0.562
4604-04-06-0	1/4	9/16-18	0.189	0.297	1.500	0.730	0.687
4604-04-08-0	1/4	3/4-16	0.189	0.391	1.500	0.800	0.876
4604-05-04-0	5/16	7/16-20	0.252	0.172	1.500	0.600	0.562
4604-05-05-0	5/16	1/2-20	0.252	0.234	1.500	0.670	0.625
4604-06-04-0	3/8	7/16-20	0.295	0.172	1.500	0.670	0.562
4604-06-06-0	3/8	9/16-18	0.295	0.297	1.500	0.730	0.687
4604-06-08-0	3/8	3/4-16	0.295	0.391	1.500	0.800	0.875
4604-08-06-0	1/2	9/16-18	0.406	0.297	1.500	0.730	0.687
4604-08-08-0	1/2	3/4-16	0.406	0.391	1.500	0.800	0.875
4604-10-08-0	5/8	3/4-16	0.500	0.391	1.500	0.800	0.875
4604-10-10-0	5/8	7/8-14	0.500	0.484	1.500	0.940	1.000
4604-10-12-0	5/8	1-1/16-12	0.500	0.609	1.500	1.090	1.250
4604-12-08-0	3/4	3/4-16	0.626	0.391	1.500	0.800	0.875
4604-12-10-0	3/4	7/8-14	0.626	0.484	1.500	0.940	1.000
4604-12-12-0	3/4	1-1/16-12	0.626	0.609	1.500	1.090	1.250
4604-12-16-0	3/4	1-5/16-12	0.626	0.844	1.500	1.130	1.500
4604-16-10-0	1	7/8-14	0.843	0.484	1.500	0.940	1.250
4604-16-12-0	1	1-1/16-12	0.843	0.609	1.500	1.090	1.250
4604-16-16-0	1	1-5/16-12	0.843	0.844	1.500	1. 130	1.500
4604-16-20-0	1	1-5/8-12	0.843	1.078	1.500	1.200	1.875
4604-20-10-0	1-1/4	7/8-14	1.094	0.484	1.500	1.075	1.500
4604-20-12-0	1-1/4	1-1/16-12	1.094	0.609	1.500	1.100	1.375
4604-20-16-0	1-1/4	1-5/16-12	1.094	0.844	1.500	1.130	1.500
4604-20-20-0	1-1/4	1-5/8-12	1.094	1.078	1.500	1.200	1.875
4604-20-24-0	1-1/4	1-7/8-12	1.094	1.312	1.500	1.270	2.125
4604-20-32-0	1-1/4	2-1/2-12	1.094	1.781	1.500	1.440	2.750
4604-24-16-0	1-1/2	1-5/16-12	1.343	0.844	1.500	1.130	1.688
4604-24-20-0	1-1/2	1-5/8-12	1.343	1.078	1.500	1.200	1.875
4604-24-24-0	1-1/2	1-7/8-12	1.343	1.312	1.500	1.270	2.125
4604-32-32-0	2	2-1/2-12	1.843	1.781	1.500	1.440	2.750

FP-FP Straight
5000 Series

SAE# 140138

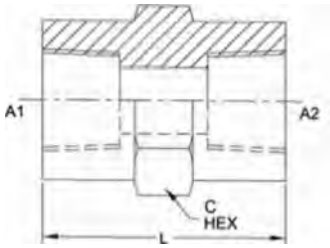

C-067

PART NO. SIZE	A1 NPTF	A2 NPTF	L LGTH	C HEX
5000-02-02	1/8-27	1/8-27	0.750	0.625
5000-04-02	1/4-18	1/8-27	1.130	0.750
5000-04-04	1/4-18	1/4-18	1.130	0.750
snnn.nfi.no	0Q.1Q	1 ,Q.O 7	i ion	n
5000-06-04	3/8-18	1/4-18	1.130	0.875
5000-06-06	3/8-18	3/8-18	1.130	0.875
5000-08-02	1/2-14	1/8-27	1.500	1.125
5000-08-04	1/2-14	1/4-18	1.500	1.125
5000-08-06	1/2-14	3/8-18	1.500	1.125
5000-08-08	1/2-14	1/2-14	1.500	1.125
5000-12-04	3/4-14	1/4-18	1.530	1.375
5000-12-06	3/4-14	3/8-18	1.530	1.375
5000-12-08	3/4-14	1/2-14	1.530	1.375
5000-12-12	3/4-14	3/4-14	1.530	1.375
5000-16-06	1-11-1/2	3/8-18	1.890	1.625
5000-16-08	1-11-1/2	1/2-14	1.890	1.625
5000-16-12	1-11-1/2	3/4-14	1.890	1.625
5000-16-16	1-11-1/2	1-11-1/2	1.890	1.625
5000-20-12	1-1/4-11-1/2	3/4-14	1.930	2.000
5000-20-16	1-1/4-11-1/2	1-11-1/2	1.930	2.000
5000-20-20	1-1/4-11-1/2	1-1/4-11-1/2	1.930	2.000
5000-24-16	1-1/2-11-1/2	1-11-1/2	1.930	2.375
5000-24-20	1-1/2-11-1/2	1-1/4-11-1/2	1.930	2.375
5000-24-24	1-1/2-11-1/2	1-1/2-11-1/2	1.930	2.375
5000-32-24	2-11-1/2	1-1/2-11-1/2	1.960	2.875
5000-32-32	2-11-1/2	2-11-1/2	1.960	2.875

MP-BW Weld-on Fitting
304SS 5304 Series

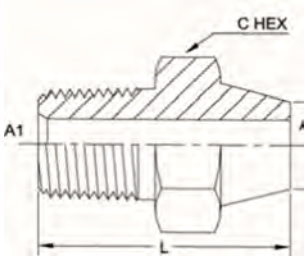

PART NO. SIZE	PIPE 0.0.	A1 NPTF	A2 WELD-ON	I.D.	I LOTH	CI HEX
5304-04	1/4	1/4-18	1/4	0.250	1.197	0.562
5304-06	3/8	3/8-18	3/8	0.375	1.250	0.687
5304-08	1/2	1/2-14	1/2	0.500	1.438	0.875
5304-12	3/4	3/4-14	3/4	0.750	1.500	1.062
5304-16	1	1-11 1/2	1	1.000	1.700	1.312
5304-20	1-1/4	1-1/4-11 1/2	1-1/4	1.250	1.940	1.750
5304-24	1-1/2	1-1/2-11 1/2	1-1/2	1.500	2.138	2.000

Tube Fittings & Adapters

MP-BW Weld-on Fitting
316SS 5316 Series

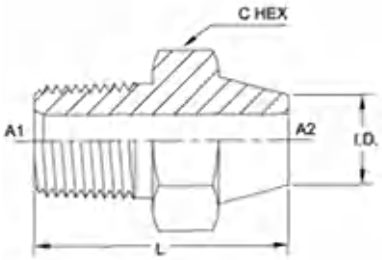

C-068

PART NO. SIZE	PIPE 0.0.	A1 NPTF	A2 WELDON	1.0.	I IGTH	C HEX
531604	1/4	1/4-18	1/4	0.250	1.197	0.562
531606	3/8	3/8-18	3/8	0.375	1.250	0.687
531608	1/2	1/2-14	1/2	0.500	1.438	0.875
5316-12	3/4	3/4-14	3/4	0.750	1.500	1.062
5316-16	1	1-11-1/2	1	1.000	1.700	1.312
5316-20	1-1/4	1-1/4-11-1/2	1-1/4	1.250	1.940	1.750
5316-24	1-1/2	1-1/2-11-1/2	1-1/2	1.500	2.138	2.000
5316-32	2	2-11-1/2	2	2.000	2.140	2.500

MP-MP Hex Nipple
5404 Series

SAE# 140137

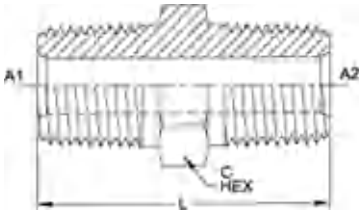

PART NO. SIZE	A1 NPTF	A2 NPTF	A1 DRILL	A2 DRILL	L IGTH	C HEX
5404-02-02	1/8-27	1/8-27	0.188	0.188	1.060	0.438
5404-04-02	1/4-18	1/8-27	0.281	0.188	1.260	0.562
5404-04-04	1/4-18	1/4-18	0.281	0.281	1.450	0.625
5404-06-02	3/8-18	1/8-27	0.406	0.188	1.260	0.750
5404-06-04	3/8-18	1/4-18	0.406	0.281	1.450	0.750
5404-06-06	3/8-18	3/8-18	0.406	0.406	1.450	0.750
5404-08-02	1/2-14	1/8-27	0.531	0.188	1.700	0.875
5404-08-04	1/2-14	1/4-18	0.531	0.281	1.700	0.875
5404-08-06	1/2-14	3/8-18	0.531	0.406	1.700	0.875
5404-08-08	1/2-14	1/2-14	0.531	0.531	1.890	0.875
5404-12-04	3/4-14	1/4-18	0.719	0.281	1.770	1.125
5404-12-06	3/4-14	3/8-18	0.719	0.406	1.770	1.125
5404-12-08	3/4-14	1/2-14	0.719	0.531	1.960	1.125
5404-12-12	3/4-14	3/4-14	0.719	0.719	1.960	1.125
5404-16-04	1-11-1/2	1/4-18	0.938	0.281	1.960	1.375
5404-16-06	1-11-1/2	3/8-18	0.938	0.406	1.960	1.375
5404-16-08	1-11-1/2	1/2-14	0.938	0.531	2.150	1.375
5404-16-12	1-11-1/2	3/4-14	0.938	0.719	2.150	1.375
5404-16-16	1-11-1/2	1-11-1/2	0.938	0.938	2.340	1.375
5404-20-08	1-1/4-11-1/2	1/2-14	1.250	0.531	2.260	1.750
5404-20-12	1-1/4-11-1/2	3/4-14	1.250	0.719	2.260	1.750
5404-20-16	1-1/4-11-1/2	1-11-1/2	1.250	0.938	2.450	1.750
5404-20-20	1-1/4-11-1/2	1-1/4-11-1/2	1.250	1.250	2.480	1.750
5404-24-12	1-1/2-11-1/2	3/4-14	1.500	0.719	2.360	2.000
5404-24-16	1-1/2-11-1/2	1-11-1/2	1.500	0.938	2.550	2.000
5404-24-20	1-1/2-11-1/2	1-1/4-11-1/2	1.500	1.250	2.580	2.000
5404-24-24	1-1/2-11-1/2	1-1/2-11-1/2	1.500	1.500	2.610	2.000
5404-32-12	2-11-1/2	3/4-14	1.938	0.719	2.540	2.500
5404-32-16	2-11-1/2	1-11-1/2	1.938	0.938	2.730	2.500
5404-32-20	2-11-1/2	1-1/4-11-1/2	1.938	1.250	2.760	2.500
5404-32-24	2-11-1/2	1-1/2-11-1/2	1.938	1.500	2.790	2.500
5404-32-32	2-11-1/2	2-11-1/2	1.938	1.938	2.820	2.500
5404-40-40	2 1/2-8	2 1/2-8	2.318	2.318	3.950	3.000

MP-MP Straight Nipple Long 5404-N Series

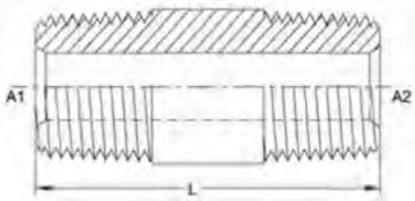

SAE# 140137

C-069

PART NO. SIZE	PIPE O.D.	A1 NPTF	A2 NPTF	A1 DRILL	A2 DRILL	L LGTH
5404-N-02X 0.750	1/8	1/8-27	1/8-27	0.188	0.188	0.750
5404-N-02X 1.000	1/8	1/8-27	1/8-27	0.188	0.188	1.000
5404-N-02X 1.500	1/8	1/8-27	1/8-27	0.188	0.188	1.500
5404-N-02X2.000	1/8	1/8-27	1/8-27	0.188	0.188	2.000
5404-N-02X 2.500	1/8	1/8-27	1/8-27	0.188	0.188	2.500
5404-N-02X 3.000	1/8	1/8-27	1/8-27	0.188	0.188	3.000
5404-N-02X 3.500	1/8	1/8-27	1/8-27	0.188	0.188	3.500
5404-N-02X4.000	1/8	1/8-27	1/8-27	0.188	0.188	4.000
5404-N-02X4.500	1/8	1/8-27	1/8-27	0.188	0.188	4.500
5404-N-02X 5.000	1/8	1/8-27	1/8-27	0.188	0.188	5.000
5404-N-02X 6.000	1/8	1/8-27	1/8-27	0.188	0.188	6.000
5404-N-04X0.875	1/4	1/4-18	1/4-18	0.281	0.281	0.875
5404-N-04X 1.500	1/4	1/4-18	1/4-18	0.281	0.281	1.500
5404-N-04X 2.000	1/4	1/4-18	1/4-18	0.281	0.281	2.000
5404-N-04X 2.500	1/4	1/4-18	1/4-18	0.281	0.281	2.500
5404-N-04X 3.000	1/4	1/4-18	1/4-18	0.281	0.281	3.000
5404-N-04X 3.500	1/4	1/4-18	1/4-18	0.281	0.281	3.500
5404-N-04X4.000	1/4	1/4-18	1/4-18	0.281	0.281	4.000
5404-N-04X4.500	1/4	1/4-18	1/4-18	0.281	0.281	4.500
5404-N-04X 5.000	1/4	1/4-18	1/4-18	0.281	0.281	5.000
5404-N-04X 5.500	1/4	1/4-18	1/4-18	0.281	0.281	5.500
5404-N-04X 6.000	1/4	1/4-18	1/4-18	0.281	0.281	6.000
5404-N-06X 1.000	3/8	3/8-18	3/8-18	0.406	0.406	1.000
5404-N-06X 1.500	3/8	3/8-18	3/8-18	0.406	0.406	1.500
5404-N-06X 2.000	3/8	3/8-18	3/8-18	0.406	0.406	2.000
5404-N-06X 2.500	3/8	3/8-18	3/8-18	0.406	0.406	2.500
5404-N-06X3.500	3/8	3/8-18	3/8-18	0.406	0.406	3.500
5404-N-06X4.000	3/8	3/8-18	3/8-18	0.406	0.406	4.000
5404-N-06X 5.000	3/8	3/8-18	3/8-18	0.406	0.406	5.000
5404-N-06X 5.500	3/8	3/8-18	3/8-18	0.406	0.406	5.500
5404-N-06X 6.000	3/8	3/8-18	3/8-18	0.406	0.406	6.000
5404-N-06X7.000	3/8	3/8-18	3/8-18	0.406	0.406	7.000
5404-N-08X1.125	1/2	1/2-14	1/2-14	0.531	0.531	1.125
5404-N-08X 1.250	1/2	1/2-14	1/2-14	0.531	0.531	1.250
5404-N-08X 1.375	1/2	1/2-14	1/2-14	0.531	0.531	1.375
5404-N-08X 1.500	1/2	1/2-14	1/2-14	0.531	0.531	1.500
5404-N-08X 1.750	1/2	1/2-14	1/2-14	0.531	0.531	1.750
5404-N-08x 2.000	1/2	1/2-14	1/2-14	0.531	0.531	2.000
5404-N-08X 2.250	1/2	1/2-14	1/2-14	0.531	0.531	2.250
5404-N-08X 2.500	1/2	1/2-14	1/2-14	0.531	0.531	2.500
5404-N-08X 3.000	1/2	1/2-14	1/2-14	0.531	0.531	3.000
5404-N-08X 3.500	1/2	1/2-14	1/2-14	0.531	0.531	3.500
5404-N-08X4.000	1/2	1/2-14	1/2-14	0.531	0.531	4.000
5404 N-08X4.500	1/2	1/2-14	1/2-14	0.531	0.531	4.500

Continued on next page

Tube Fittings & Adapters

5404-N Series continued

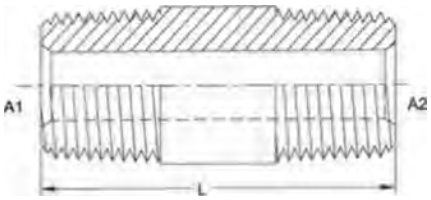

PART ND. SIZE	PIPE O.D.	A1 NPTF	A2 NPTF	A1 DRILL	A2 DRILL	L LGTH
5404-N-08X5.000	1/2	1/2-14	1/2-14	0.531	0.531	5.000
5404-N-08x6.000	1/2	1/2-14	1/2-14	0.531	0.531	6.000
5404-N-12X1.375	3/4	3/4-14	3/4-14	0.719	0.719	1.375
5404-N-12X1.500	3/4	3/4-14	3/4-14	0.719	0.719	1.500
5404-N-12X1.625	3/4	3/4-14	3/4-14	0.719	0.719	1.625
5404-N-12X2.000	3/4	3/4-14	3/4-14	0.719	0.719	2.000
5404-N-12X2.500	3/4	3/4-14	3/4-14	0.719	0.719	2.500
5404-N-12X3.000	3/4	3/4-14	3/4-14	0.719	0.719	3.000
5404-N-12x3.500	3/4	3/4-14	3/4-14	0.719	0.719	3.500
5404-N-12x4.000	3/4	3/4-14	3/4-14	0.719	0.719	4.000
5404-N-12X4.500	3/4	3/4-14	3/4-14	0.719	0.719	4.500
5404-N-12x5.000	3/4	3/4-14	3/4-14	0.719	0.719	5.000
5404-N-12X5.500	3/4	3/4-14	3/4-14	0.719	0.719	5.500
5404-N-12X6.000	3/4	3/4-14	3/4-14	0.719	0.719	6.000
5404-N-12X6.500	3/4	3/4-14	3/4-14	0.719	0.719	6.500
5404-N-12x8.000	3/4	3/4-14	3/4-14	0.719	0.719	8.000
5404-N-16X1.500	1	1-11 1/2	1-11 1/2	0.938	0.938	1.500
5404-N-16x2.000	1	1-11 1/2	1-11 1/2	0.938	0.938	2.000
5404-N-16x2.500	1	1-11 1/2	1-11 1/2	0.938	0.938	2.500
5404-N-16X3.000	1	1-11 1/2	1-11 1/2	0.938	0.938	3.000
5404-N-16X3.250	1	1-11 1/2	1-11 1/2	0.938	0.938	3.250
5404-N-16x3.500	1	1-11 1/2	1-11 1/2	0.938	0.938	3.500
5404-N-16X3.750	1	1-11 1/2	1-11 1/2	0.938	0.938	3.750
5404-N-16X4.000	1	1-11 1/2	1-11 1/2	0.938	0.938	4.000
5404-N-16x4.500	1	1-11 1/2	1-11 1/2	0.938	0.938	4.500
5404-N-16X5.000	1	1-11 1/2	1-11 1/2	0.938	0.938	5.000
5404-N-16X5.500	1	1-11 1/2	1-11 1/2	0.938	0.938	5.500
5404-N-16X6.000	1	1-11 1/2	1-11 1/2	0.938	0.938	6.000
5404-N-20X 1.500	1-1/4	1-1/4-11 1/2	1-1/4-11 1/2	1.250	1.250	1.500
5404-N-20X 1.625	1-1/4	1-1/4-11 1/2	1-1/4-11 1/2	1.250	1.250	1.625
5404-N-20X2.000	1-1/4	1-1/4-11 1/2	1-1/4-11 1/2	1.250	1.250	2.000
5404-N-20X2.500	1-1/4	1-1/4-11 1/2	1-1/4-11 1/2	1.250	1.250	2.500
5404-N-20X3.000	1-1/4	1-1/4-11 1/2	1-1/4-11 1/2	1.250	1.250	3.000
5404-N-20X3.500	1-1/4	1-1/4-11 1/2	11/4-11 1/2	1.250	1.250	3.500
5404-N-20x4.000	1-1/4	1-1/4-11 1/2	1-1/4-11 1/2	1.250	1.250	4.000
5404-N-20x6.000	1-1/4	1-1/4-11 1/2	1-1/4-11 1/2	1.250	1.250	6.000
5404-N-20X8.000	1-1/4	1-1/4-11 1/2	1-1/4-11 1/2	1.250	1.250	8.000
5404-N-24X 1.000	1-1/2	1-1/2-11 1/2	1-1/2-11 1/2	1.500	1.500	1.000
5404-N-24X 1.750	1-1/2	1-1/2-11 1/2	1-1/2-11 1/2	1.500	1.500	1.750
5404-N-24x2.500	1-1/2	1-1/2-11 1/2	1-1/2-11 1/2	1.500	1.500	2.500
5404-N-24X4.000	1-1/2	1-1/2-11 1/2	1-1/2-11 1/2	1.500	1.500	4.000
5404-N-24X6.000	1-1/2	1-1/2-11 1/2	1-1/2-11 1/2	1.500	1.500	6.000

MP-FP Straight Expander
5405 Series

SAE# 140139

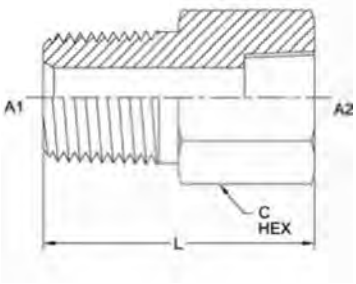

C-071

PART NO. SIZE	A1 NPTF	A2 NPTF	A1 DRILL	L LGTH	C HEX
5405-01-02	1/16-27	1/8-27	0.117	1.04	0.625
5405-02-02	1/8-27	1/8-27	0.188	1.04	0.625
5405-02-04	1/8-27	1/4-18	0.188	1.21	0.750
5405-02-06	1/8-27	3/8-18	0.188	1.25	0.875
5405-02-08	1/8-27	1/2-14	0.188	1.49	1.125
5405-04-02	1/4-18	1/8-27	0.281	1.21	0.625
5405-04-04	1/4-18	1/4-18	0.281	1.39	0.750
5405-04-06	1/4-18	3/8-18	0.281	1.44	0.875
5405-04-08	1/4-18	1/2-14	0.281	1.68	1.125
5405-04-12	1/4-18	3/4-14	0.281	1.74	1.375
5405-06-02	3/8-18	1/8-27	0.333	1.21	0.750
5405-06-04	3/8-18	1/4-18	0.406	1.41	0.750
5405-06-06	3/8-18	3/8-18	0.406	1.44	0.875
5405-06-08	3/8-18	1/2-14	0.406	1.68	1.125
5405-06-12	3/8-18	3/4-14	0.406	1.74	1.375
5405-08-04	1/2-14	1/4-18	0.431	1.60	0.875
5405-08-06	1/2-14	3/8-18	0.531	1.66	0.875
5405-08-08	1/2-14	1/2-14	0.531	1.87	1.125
5405-08-12	1/2-14	3/4-14	0.531	1.93	1.375
5405-08-16	1/2-14	1-11-1/2	0.531	2.18	1.625
5405-12-04	3/4-14	1/4-18	0.431	1.60	1.125
5405-12-06	3/4-14	3/8-18	0.571	1.66	1.125
5405-12-08	3/4-14	1/2-14	0.697	1.89	1.125
5405-12-12	3/4-14	3/4-14	0.719	1.93	1.375
5405-12-16	3/4-14	1-11-1/2	0.719	2.18	1.625
5405-12-20	3/4-14	1-1/4-11-1/2	0.719	2.27	2.000
5405-16-08	1-11-1/2	1/2-14	0.697	2.08	1.375
5405-16-12	1-11-1/2	3/4-14	0.907	2.14	1.375
5405-16-16	1-11-1/2	1-11-1/2	0.938	2.37	1.625
5405-16-20	1-11-1/2	1-1/4-11-1/2	0.938	2.46	2.000
5405-16-24	1-11-1/2	1-1/2-11-1/2	0.938	2.47	2.375
5405-20-16	1-1/4-11-1/2	1-11-1/2	1.142	2.42	1.750
5405-20-20	1-1/4-11-1/2	1-1/4-11-1/2	1.250	2.49	2.000
5405-20-24	1-1/4-11-1/2	1-1/2-11-1/2	1.250	2.50	2.375
5405-20-32	1-1/4-11-1/2	2-11-1/2	1.250	2.60	2.875
5405-24-20	1-1/2-11-1/2	1-1/4-11-1/2	1.486	2.54	2.000
5405-24-24	1-1/2-11-1/2	1-1/2-11-1/2	1.500	2.53	2.375
5405-24-32	1-1/2-11-1/2	2-11-1/2	1.500	2.63	2.875
5405-32-32	2-11-1/2	2-11-1/2	1.938	2.66	2.875

Tube Fittings & Adapters

MP-FP Reducer Bushing
5406 Series

SAE# 140140

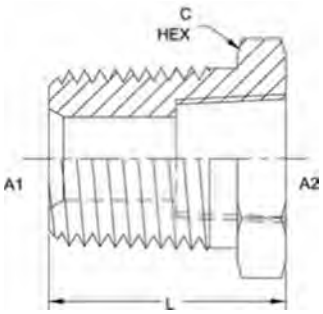

C-072

PART NO. SIZE	A1 NPTF	A2 NPTF	A1 DRILL	L LGTH	C HEX
5406-04-02	1/4-18	1/8-27	0.281	0.85	0.625
5406-06-02	3/8-18	1/8-27	0.333	0.85	0.750
5406-06-04	3/8-18	1/4-18	0.406	0.85	0.750
5406-08-02	1/2-14	1/8-27	0.333	1.10	0.875
5406-08-04	1/2-14	1/4-18	0.431	1.10	0.875
5406-08-06	1/2-14	3/8-18	0.531	1.10	0.875
5406-12-02	3/4-14	1/8-27	0.333	1.17	1.125
5406-12-04	3/4-14	1/4-18	0.431	1.17	1.125
5406-12-06	3/4-14	3/8-18	0.571	1.17	1.125
5406-12-08	3/4-14	1/2-14	0.697	1.17	1.125
5406-16-02	1-11-1/2	1/8-27	0.333	1.36	1.375
5406-16-04	1-11-1/2	1/4-18	0.431	1.36	1.375
5406-16-06	1-11-1/2	3/8-18	0.571	1.36	1.375
5406-16-08	1-11-1/2	1/2-14	0.697	1.36	1.375
5406-16-12	1-11-1/2	3/4-14	0.907	1.36	1.375
5406-20-04	1-1/4-11-1/2	1/4-18	0.431	1.47	1.750
5406-20-06	1-1/4-11-1/2	3/8-18	0.571	1.47	1.750
5406-20-08	1-1/4-11-1/2	1/2-14	0.697	1.47	1.750
5406-20-12	1-1/4-11-1/2	3/4-14	0.907	1.47	1.750
5406-20-16	1-1/4-11-1/2	1-11-1/2	1.142	1.47	1.750
5406-24-02	1-1/2-11-1/2	1/8-27	0.333	1.57	2.000
5406-24-04	1-1/2-11-1/2	1/4-18	0.431	1.57	2.000
5406-24-06	1-1/2-11-1/2	3/8-18	0.571	1.57	2.000
5406-24-08	1-1/2-11-1/2	1/2-14	0.697	1.57	2.000
5406-24-12	1-1/2-11-1/2	3/4-14	0.907	1.57	2.000
5406-24-16	1-1/2-11-1/2	1-11-1/2	1.142	1.57	2.000
5406-24-20	1-1/2-11-1/2	1-1/4-11-1/2	1.486	1.57	2.000
5406-32-04	2-11-1/2	1/4-18	0.431	1.75	2.500
5406-32-06	2-11-1/2	3/8-18	0.571	1.75	2.500
5406-32-08	2-11-1/2	1/2-14	0.697	1.75	2.500
5406-32-12	2-11-1/2	3/4-14	0.907	1.75	2.500
5406-32-16	2-11-1/2	1-11-1/2	1.142	1.75	2.500
5406-32-20	2-11-1/2	1-1/4-11-1/2	1.486	1.75	2.500
5406-32-24	2-11-1/2	1-1/2-11-1/2	1.720	1.75	2.500
5406-40-32	2-1/2 - 8	2-11-1/2	2.204	2.37	3.000
5406-48-06	3-8	3/8-18	0.571	2.43	3.750

Pipe Cap
5406-C Series

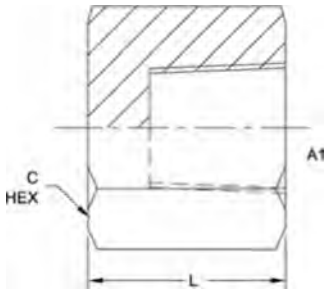

C-073

PART ND. SIZE	A1 NPTF	I LGTH	C HEX
5406-C-02	1/8-27	0.55	0.562
5406-C-04	1/4-18	0.81	0.750
5406-C-06	3/8-18	0.81	0.812
5406-C-08	1/2-14	1.00	1.000
5406-C-12	3/4-14	1.13	1.188
5406-C-16	1-11 1/2	1.15	1.500
5406-C-20	1-1/4-11 1/2	1.25	2.000
5406-C-24	1-1/2-11-1/2	1.54	2.375
5406-C-32	2-11-1/2	1.64	2.875

Hollow Hex Pipe Plug
5406-HP Series

SAE# 130109

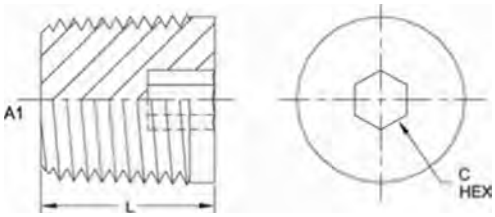

PART NO. SIZE	A1 NPTF	L LGTH	C HEX
5406-HP-01	1/16-27	0.30	0.156
5406-HP-02	1/8-27	0.30	0.188
5406-HP-04	1/4-18	0.46	0.250
5406-HP-06	3/8-18	0.46	0.312
5406-HP-08	1/2-14	0.61	0.375
5406-HP-12	3/4-14	0.62	0.562
5406-HP-16	1-11 1/2	0.77	0.625
5406-HP-20	1-1/4-11 1/2	0.83	0.750
5406-HP-24	1-1/2-11 1/2	0.83	1.000
5406-HP-32	2-11 1/2	0.83	1.000

External Hex Pipe Plug
5406-P Series

SAE# 130109E

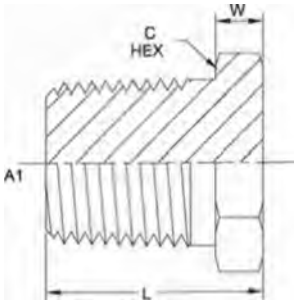

C-074

PART NO. SIZE	A1 NPTF	I LGTH	W WIDTH	C HEX
5406-P-01	1/16-27	0.562	0.19	0.438
5406-P-02	1/8-27	0.562	0.19	0.438
5406-P-04	1/4-18	0.750	0.19	0.562
5406-P-06	3/8-18	0.781	0.22	0.688
5406-P-08	1/2-14	1.120	0.22	0.875
5406-P-12	3/4-14	1.170	0.42	1.125
5406-P-16	1-11 1/2	1.360	0.42	1.375
5406-P-20	1-1/4-11 1/2	1.468	0.50	1.750
5406-P-24	1-1/2-11 1/2	1.570	0.57	2.000
5406-P-32	2-11 1/2	1.750	0.72	2.500

Square Head Pipe Plug
5406-SHP Series

SAE# 130109A

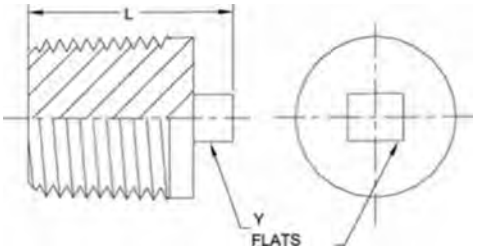

PART NO. SIZE	A1 NPTF	L LETH	Y FLATS
5406-SHP-02	1/8-27	0.630	0.281
5406-SHP-04	1/4-18	0.760	0.375
5406-SHP-06	3/8-18	0.845	0.437
5406-SHP-08	1/2-14	1.000	0.563
5406-SHP-12	3/4-14	1.080	0.625
5406-SHP-16	1-11 1/2	1.270	0.812
5406-SHP-20	1-1/4-11 1/2	1.400	0.937
5406-SHP-24	1-1/2-11 1/2	1.470	1.125

MP-MP 90°
5500 Series

SAE# 140237

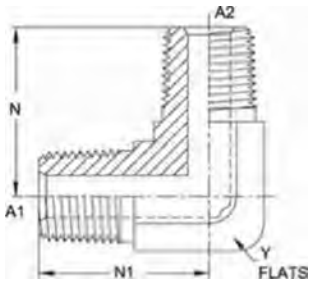

PART NO. SIZE	A1 NPTF	A2 NPTF	A1 DRILL	A2 DRILL	N1 LGTH	N LGTH	Y FLATS
5500-02-02-FG	1/8-27	1/8-27	0.188	0.188	0.78	0.78	0.438
5500-04-02-FG	1/4-18	1/8-27	0.281	0.188	1.09	0.90	0.562
5500-04-04-FG	1/4-18	1/4-18	0.281	0.281	1.09	1.09	0.562
5500-06-02-FG	3/8-18	1/8-27	0.406	0.188	1.22	1.03	0.750
5500-06-04-FG	3/8-18	1/4-18	0.406	0.281	1.22	1.22	0.750
5500-06-06-FG	3/8-18	3/8-18	0.406	0.406	1.22	1.22	0.750
5500-08-04-FG	1/2-14	1/4-18	0.531	0.281	1.47	1.28	0.875
5500-08-06-FG	1/2-14	3/8-18	0.531	0.406	1.47	1.28	0.875
5500-08-08-FG	1/2-14	1/2-14	0.531	0.531	1.47	1.47	0.875
5500-12-06-FG	3/4-14	3/8-18	0.719	0.406	1.59	1.40	1.062
5500-12-08-FG	3/4-14	1/2-14	0.719	0.531	1.59	1.59	1.062
5500-12-12-FG	3/4-14	3/4-14	0.719	0.719	1.59	1.59	1.062
5500-16-08-FG	1-11 1/2	1/2-14	0.938	0.531	1.97	1.78	1.312
5500-16-12-FG	1-11 1/2	3/4-14	0.938	0.719	1.97	1.78	1.312
5500-16-16-FG	1-11 1/2	1-11 1/2	0.938	0.938	1.97	1.97	1.312
5500-20-20-FG	1-1/4-11 1/2	1-1/4-11 1/2	1.250	1.250	2.38	2.38	1.625
5500-24-24-FG	1-1/2-11 1/2	1-1/2-11 1/2	1.500	1.500	2.64	2.64	1.875
5500-32-32-FG	2-11 1/2	2-11 1/2	1.938	1.938	3.00	3.00	2.500

MP-MP 45°
5501 Series

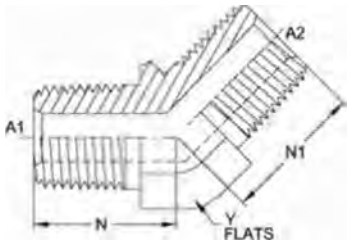

PART NO. SIZE	A1 NPTF	A2 NPTF	A1 DRILL	A2 DRILL	N LGTH	N1 LGTH	Y FLATS
5501-01-02-FG	1/16-27	1/8-27	0.117	0.188	0.64	0.64	0.438
5501-02-02-FG	1/8-27	1/8-27	0.188	0.188	0.64	0.64	0.438
5501 -04-04-FG	1/4-18	1/4-18	0.281	0.281	0.86	0.86	0.562
5501-06-06-FG	3/8-18	3/8-18	0.406	0.406	0.95	0.95	0.750
5501-08-08-FG	1/2-14	1/2-14	0.531	0.531	1.17	1.17	0.875
5501-12-12-FG	3/4-14	3/4-14	0.719	0.719	1.20	1.20	1.062
5501-16-16-FG	1-11 1/2	1-11 1/2	0.938	0.938	1.48	1.48	1.312
5501-20-20-FG	1-1/4-11 1/2	1-1/4-11 1/2	1.250	1.250	1.67	1.67	1.625
5501-24-24-FG	1-1/2-11 1/2	1-1/2-11 1/2	1.500	1.500	1.77	1.77	1.875

MP-FP 90° Street Elbow
5502 Series

SAE# 140239

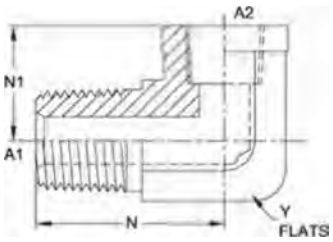

PART NO. SIZE	A1 NPTF	A2 NPTF	A1 DRILL	N LGTH	N1 LGTH	Y FLATS
5502-01 -02-FG	1/16-27	1/8-27	0.117	0.78	0.66	0.562
5502-02-02-FG	1/8-27	1/8-27	0.188	0.78	0.66	0.562
5502-02-04-FG	1/8-27	1/4-18	0.188	1.09	0.88	0.750
5502-02-06-FG	1/8-27	3/8-18	0.188	1.22	1.02	0.875
5502-04-02-FG	1/4-18	1/8-27	0.281	1.09	0.66	0.562
5502-04-04-FG	1/4-18	1/4-18	0.281	1.09	0.88	0.750
5502-04-06-FG	1/4-18	3/8-18	0.281	1.22	1.02	0.875
5502-06-04-FG	3/8-18	1/4-18	0.406	1.22	0.88	0.750
5502-06-06-FG	3/8-18	3/8-18	0.406	1.22	1.02	0.875
5502-06-08-FG	3/8-18	1/2-14	0.406	1.47	1.23	1.062
5502-08-04-FG	1/2-14	1/4-18	0.531	1.47	1.01	0.875
5502-08-06-FG	1/2-14	3/8-18	0.531	1.47	1.02	0.875
5502-08-08-FG	1/2-14	1/2-14	0.531	1.47	1.23	1.062
5502-08-12-FG	1/2-14	3/4-14	0.531	1.59	1.36	1.312
5502-12-06-FG	3/4-14	3/8-18	0.719	1.59	1.01	1.062
5502-12-08-FG	3/4-14	1/2-14	0.719	1.59	1.23	1.062
5502-12-12-FG	3/4-14	3/4-14	0.719	1.59	1.36	1.312
5502-12-16-FG	3/4-14	1-11-1/2	0.719	1.70	1.62	1.625
5502-16-12-FG	1-11-1/2	3/4-14	0.938	1.70	1.36	1.312
5502-16-16-FG	1-11-1/2	1-11-1/2	0.938	1.70	1.62	1.625
5502-16-20-FG	1-11-1/2	1-1/4-11-1/2	0.938	2.38	1.70	1.875
5502-20-16-FG	1-1/4-11-1/2	1-11-1/2	1.250	2.38	1.62	1.625
5502-20-20-FG	1-1/4-11-1/2	1-1/4-11-1/2	1.250	2.38	1.70	1.875
5502-20-24-FG	1-1/4-11-1/2	1-1/2-11-1/2	1.250	2.64	2.08	2.562
5502-24-24-FG	1-1/2-11-1/2	1-1/2-11-1/2	1.500	2.64	2.08	2.562
5502-32-32-FG	2-11-1/2	2-11-1/2	1.938	3.00	2.39	2.812

MP-FP 45° Street Elbow
5503 Series

SAE# 140339

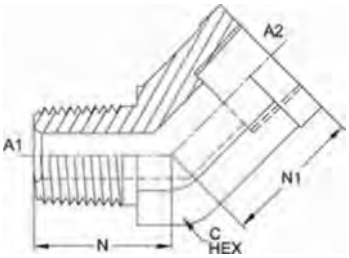

PART NO. SIZE	A1 NPTF	A2 NPTF	A1 DRILL	N LGTH	N1 LGTH	Y FLATS
5503-02-02-FG	1/8-27	1/8-27	0.188	0.72	0.47	0.562
5503-02-04-FG	1/8-27	1/4-18	0.188	0.86	0.62	0.750
5503-04-04-FG	1/4-18	1/4-18	0.281	1.05	0.62	0.750
5503-06-06-FG	3/8-18	3/8-18	0.406	1.06	0.72	0.875
5503-08-08-FG	1/2-14	1/2-14	0.531	1.34	0.91	1.062
5503-12-12-FG	3/4-14	3/4-14	0.719	1.38	0.97	1.312
5503-16-16-FG	1-11 1/2	1-11 1/2	0.938	1.72	1.12	1.625
5503-20-20-FG	1-1/4-11 1/2	1-1/4-11 1/2	1.250	1.80	1.63	1.875
5503-24-24-FG	1-1/2-11 1/2	1-1/2-11 1/2	1.500	2.06	1.69	2.562

FP-FP 90° Street Elbow
5504 Series

SAE# 140238

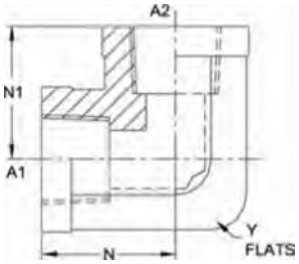

PART NO. SIZE	A1 NPTF	A2 NPTF	N LGTH	N1 LGTH	Y FLATS
5504-02-02-FG	1/8-27	1/8-27	0.66	0.66	0.562
5504-04-02-FG	1/4-18	1/8-27	0.88	0.88	0.750
5504-04-04-FG	1/4-18	1/4-18	0.88	0.88	0.750
5504-06-04-FG	3/8-18	1/4-18	1.02	1.02	0.875
5504-06-06-FG	3/8-18	3/8-18	1.02	1.02	0.875
5504-08-04-FG	1/2-14	1/4-18	1.23	1.23	1.062
5504-08-06-FG	1/2-14	3/8-18	1.23	1.23	1.062
5504-08-08-FG	1/2-14	1/2-14	1.23	1.23	1.062
5504-12-06-FG	3/4-14	3/8-18	1.36	1.36	1.312
5504-12-08-FG	3/4-14	1/2-14	1.36	1.36	1.312
5504-12-12-FG	3/4-14	3/4-14	1.36	1.36	1.312
5504-16-08-FG	1-11-1/2	1/2-14	1.62	1.62	1.625
5504-16-12-FG	1-11-1/2	3/4-14	1.62	1.62	1.625
5504-16-16-FG	1-11-1/2	1-11-1/2	1.62	1.62	1.625
5504-20-12-FG	1-1/4-11-1/2	3/4-14	1.70	1.70	1.875
5504-20-16-FG	1-1/4-11-1/2	1-11-1/2	1.70	1.70	1.875
5504-20-20-FG	1-1/4-11-1/2	1-1/4-11-1/2	1.70	1.70	1.875
5504-24-20-FG	1-1/2-11-1/2	1-1/4-11-1/2	2.08	2.08	2.562
5504-24-24-FG	1-1/2-11-1/2	1-1/2-11-1/2	2.08	2.08	2.562
5504-32-32-FG	2-11-1/2	2-11-1/2	2.39	2.39	2.812

FP-FP 45° 5505 Series

SAE# 140338

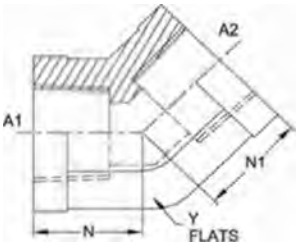

PART NO. SIZE	A1 NPTF	A2 NPTF	N LGTH	N1 LGTH	Y FLATS
5505-02-02-FG	1/8-27	1/8-27	0.50	0.50	0.562
5505-04-04-FG	1/4-18	1/4-18	0.69	0.69	0.750
5505-06-06-FG	3/8-18	3/8-18	0.75	0.75	0.875
5505-08-08-FG	1/2-14	1/2-14	0.94	0.94	1.062
5505-12-12-FG	3/4-14	3/4-14	1.00	1.00	1.312
5505-16-16-FG	1-11 1/2	1-11 1/2	1.19	1.19	1.625
5505-20-20-FG	1 1/4-11 1/2	1 1/4-11 1/2	1.44	1.44	1.875

Tube Fittings & Adapters

MP-MP-MP Tee
5600 Series

SAE# 140437
(As coded per SAE J846)

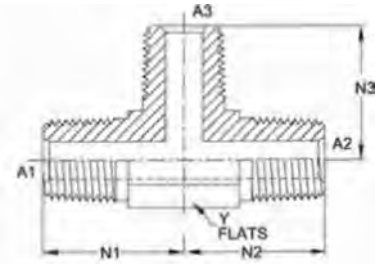

5600-02-02-02-FG	1/8-27	1/8-27	1/8-27	0.188	0.188	0.188	0.78	0.78	0.78	0.438
5600-04-04-04-FG	1/4-18	1/4-18	1/4-18	0.281	0.281	0.281	1.09	1.09	1.09	0.562
5600-06-06-06-FG	3/8-18	3/8-18	3/8-18	0.406	0.406	0.406	1.22	1.22	1.22	0.750
5600-08-08-08-FG	1/2-14	1/2-14	1/2-14	0.531	0.531	0.531	1.47	1.47	1.47	0.875
5600-12-12-12-FG	3/4-14	3/4-14	3/4-14	0.719	0.719	0.719	1.59	1.59	1.59	1.062
5600-16-16-16-FG	1-11 1/2	1-11 1/2	1-11 1/2	0.938	0.938	0.938	1.97	1.97	1.97	1.312
5600-20-20-20-FG	1-1/4-11 1/2	1-1/4-11 1/2	1-1/4-11 1/2	1.250	1.250	1.250	2.38	2.38	2.38	1.625
5600-32-32-32-FG	2-11 1/2	2-11 1/2	2-11 1/2	1.938	1.938	1.938	3.00	3.00	3.00	2.500

MP-MP-FP Tee
5601 Series

SAE# 140427
(As coded per SAE J846)

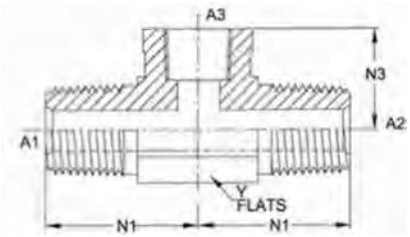

PART NO. SIZE	A1 NPTF	A2 NPTF	A3 NPTF	A1 DRILL	A2 DRILL	N1 LGTH	N2 LGTH	N3 LGTH	Y FLATS
5601-02-02-02-FG	1/8-27	1/8-27	1/8-27	0.188	0.188	0.78	0.78	0.66	0.562
5601-04-04-04-FG	1/4-18	1/4-18	1/4-18	0.281	0.281	1.09	1.09	0.88	0.750
5601-06-06-06-FG	3/8-18	3/8-18	3/8-18	0.406	0.406	1.22	1.22	1.02	0.875
5601-08-08-08-FG	1/2-14	1/2-14	1/2-14	0.531	0.531	1.47	1.47	1.23	1.062
5601-12-12-12-FG	3/4-14	3/4-14	3/4-14	0.719	0.719	1.59	1.59	1.36	1.312
5601-16-16-16-FG	1-11 1/2	1-11 1/2	1-11 1/2	0.938	0.938	1.70	1.70	1.62	1.625
5601-20-20-20-FG	1-1/4-11 1/2	1-1/4-11 1/2	1-1/4-11 1/2	1.250	1.250	2.38	2.38	1.70	1.875
5601-24-24-24-FG	1-1/2-11 1/2	1-1/2-11 1/2	1-1/2-11 1/2	1.500	1.500	2.64	2.64	2.08	2.562

MP-FP-FP Street Tee
5602 Series

SAE# 140424

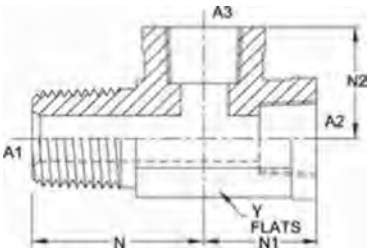

C-079

PART NO. SIZE	A1 NPTF	A2 NPTF	A3 NPTF	A1 DRILL	N LOTH	N1 LGTH	N2 LOTH	Y FLATS
5602-02-02-02-FG	1/8-27	1/8-27	1/8-27	0.188	0.78	0.66	0.66	0.562
5602-02-04-04-FG	1/8-27	1/4-18	1/4-18	0.188	0.90	0.88	0.88	0.750
5602-04-04-04-FG	1/4-18	1/4-18	1/4-18	0.281	1.09	0.88	0.88	0.750
5602-06-06-06-FG	3/8-18	3/8-18	3/8-18	0.406	1.22	1.02	1.02	0.875
5602-08-08-08-FG	1/2-14	1/2-14	1/2-14	0.531	1.47	1.23	1.23	1.062
5602-12-12-12-FG	3/4-14	3/4-14	3/4-14	0.719	1.59	1.36	1.36	1.312
5602-16-16-16-FG	1-11 1/2	1-11 1/2	1-11 1/2	0.938	1.70	1.62	1.62	1.625
5602-20-20-20-FG	1-1/4-11 1/2	1-1/4-11 1/2	1-1/4-11 1/2	1.250	2.38	1.70	1.70	1.875
5602-24-24-24-FG	1-1/2-11 1/2	1-1/2-11 1/2	1-1/2-11 1/2	1.500	2.64	2.08	2.08	2.562
5602-32-32-32-FG	2-11 1/2	2-11 1/2	2-11 1/2	1.938	3.00	2.39	2.39	2.812

MP-FP-MP Tee
5603 Series

SAE# 140426
(As coded per SAE J846)

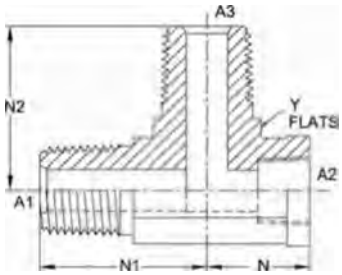

PART NO. SIZE	A1 NPTF	A2 NPTF	A3 NPTF	A1 ORILL	A3 DRILL	N1 LGTH	N LGTH	N2 LGTH	Y FLATS
5603-02-02-02-FG	1/8-27	1/8-27	1/8-27	0.188	0.188	0.78	0.66	0.78	0.562
5603-02-04-02-FG	1/8-27	1/4-18	1/8-27	0.188	0.188	0.90	0.88	0.90	0.750
5603-04-04-04-FG	1/4-18	1/4-18	1/4-18	0.281	0.281	1.09	0.88	1.09	0.750
5603-06-06-06-FG	3/8-18	3/8-18	3/8-18	0.406	0.406	1.22	1.02	1.22	0.875
5603-08-08-08-FG	1/2-14	1/2-14	1/2-14	0.531	0.531	1.47	1.23	1.47	1.062
5603-12-12-08-FG	3/4-14	3/4-14	1/2-14	0.719	0.531	1.59	1.36	1.59	1.312
5603-12-12-12-FG	3/4-14	3/4-14	3/4-14	0.719	0.719	1.59	1.36	1.59	1.312
5603-16-16-16-FG	1-11-1/2	1-11-1/2	1-11-1/2	0.938	0.938	1.70	1.62	1.70	1.625
5603-20-20-20-FG	1-1/4-11-1/2	1-1/4-11-1/2	1-1/4-11-1/2	1.250	1.250	2.38	1.70	2.38	1.875
5603-24-24-24-FG	1-1/2-11-1/2	1-1/2-11-1/2	1-1/2-11-1/2	1.500	1.500	2.64	2.08	2.64	2.562

FP-FP-MP Branch Tee
5604 Series

SAE# 140425

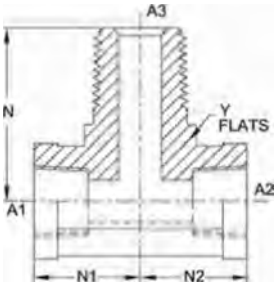

PART NO. SIZE	A1 NPTF	A2 NPTF	A3 NPTF	A3 DRILL	N1 LOTH	N2 LOTH	N LOTH	Y FLATS
5604-02-02-02-FG	1/8-27	1/8-27	1/8-27	0.188	0.66	0.66	0.78	0.562
5604-04-04-04-FG	1/4-18	1/4-18	1/4-18	0.281	0.88	0.88	1.09	0.750
5604-06-06-06-FG	3/8-18	3/8-18	3/8-18	0.406	1.02	1.02	1.22	0.875
5604-08-08-08-FG	1/2-14	1/2-14	1/2-14	0.531	1.23	1.23	1.47	1.062
5604-12-12-08-FG	3/4-14	3/4-14	1/2-14	0.531	1.36	1.36	1.59	1.312
5604-12-12-12-FG	3/4-14	3/4-14	3/4-14	0.719	1.36	1.36	1.59	1.312
5604-16-16-16-FG	1-11 1/2	1-11 1/2	1-11 1/2	0.938	1.62	1.62	1.70	1.625
5604-20-20-20-FG	1-1/4-11 1/2	1-1/4-11 1/2	1-1/4-11 1/2	1.250	1.70	1.70	2.38	1.875
5604-24-24-24-FG	1-1/2-11 1/2	1-1/2-11 1/2	1-1/2-11 1/2	1.500	2.08	2.08	2.64	2.562

FP-FP-FP Tee
5605 Series

SAE# 140438

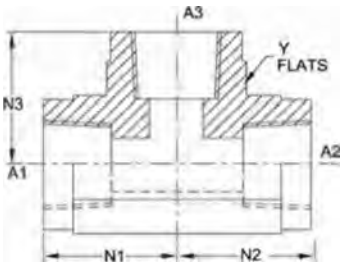

PART NO.SIZE	A1 NPTF	A2 NPTF	A3 NPTF	N1 LGTH	N2 LOTH	N3 LGTH	Y FLATS
5605-02-02-02-FG	1/8-27	1/8-27	1/8-27	0.66	0.66	0.66	0.562
5605-04-04-02-FG	1/4-18	1/4-18	1/4-18	0.88	0.88	0.88	0.750
5605-04-04-04-FG	1/4-18	1/4-18	1/4-18	0.88	0.88	0.88	0.750
5605-04-04-06-FG	1/4-18	1/4-18	1/4-18	1.02	1.02	1.02	0.875
5605-06-06-06-FG	3/8-18	3/8-18	3/8-18	1.02	1.02	1.02	0.875
5605-06-06-08-FG	3/8-18	3/8-18	3/8-18	1.23	1.23	1.23	1.062
5605-08-08-08-FG	1/2-14	1/2-14	1/2-14	1.23	1.23	1.23	1.062
5605-12-12-12-FG	3/4-14	3/4-14	3/4-14	1.36	1.36	1.36	1.312
5605-16-16-16-FG	1-11 1/2	1-11 1/2	1-11 1/2	1.62	1.62	1.62	1.625
5605-20-20-20-FG	1-1/4-11 1/2	1-1/4-11 1/2	1-1/4-11 1/2	1.70	1.70	1.70	1.875
5605-24-24-24-FG	1-1/2-11 1/2	1-1/2-11 1/2	1-1/2-11 1/2	2.08	2.08	2.08	2.562
5605-32-32-32-FG	2-11 1/2	2-11 1/2	2-11 1/2	2.39	2.39	2.39	2.812

MP-MP-MP-MP Cross
5650 Series

SAE# 140537
(As coded per SAE J846)

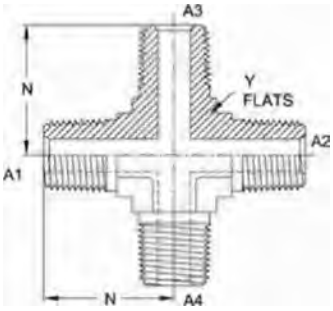

C-081

PART NO. SIZE	A1 NPTF	A2 NPTF	A3 NPTF	A4 NPTF	A1 DRILL	A2 DRILL	A3 DRILL	A4 DRILL	N LGTH	Y FLATS
5650-04-04-04-04-FG	1/4-18	1/4-18	1/4-18	1/4-18	0.281	0.281	0.281	0.281	1.09	0.562
5650-16-16-16-16-FG	1-11/12	1-11/12	1-11/12	1-11/12	0.938	0.938	0.938	0.938	1.97	1.312

FP-FP-FP-FP Cross
5652 Series

SAE# 140538
(As coded per SAE J846)

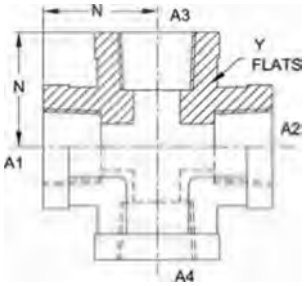

PART NO. SIZE	A1 NPTF	A2 NPTF	A3 NPTF	A4 NPTF	N LGTH	Y FLATS
5652-02-02-02-02-FG	1/8-27	1/8-27	1/8-27	1/8-27	0.66	0.562
5652-04-04-04-04-FG	1/4-18	1/4-18	1/4-18	1/4-18	0.88	0.750
5652-06-06-06-06-FG	3/8-18	3/8-18	3/8-18	3/8-18	1.02	0.875
5652-08-08-08-08-FG	1/2-14	1/2-14	1/2-14	1/2-14	1.23	1.062
5652-12-12-12-12-FG	3/4-14	3/4-14	3/4-14	3/4-14	1.36	1.312
5652-16-16-16-16-FG	1-11 1/2	1-11 1/2	1-11 1/2	1-11 1/2	1.62	1.625
5652-20-20-20-20-FG	1-1/4-11 1/2	1-1/4-11 1/2	1-1/4-11 1/2	1-1/4-11 1/2	1.70	1.875
5652-24-24-24-24-FG	1-1/2-11 1/2	1-1/2-11 1/2	1-1/2-11 1/2	1-1/2-11 1/2	2.08	2.562
5652-32-32-32-32-FG	2-11 1/2	2-11 1/2	2-11 1/2	2-11 1/2	2.39	2.812

Tube Fittings & Adapters

MP-MP-FP-FP Cross
5653 Series

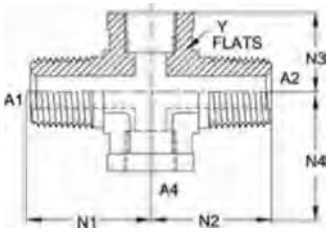

PART NO. SIZE	AT NPTF	A2 NPTF	A3 NPTF	A4 NPTF	A1 DRILL	A2 DRILL	N1 LGTH	N2 LGTH	N3 LGTH	N4 LGTH	Y FLATS
5653-04-04-04-04-FG	1/4-18	1/4-18	1/4-18	1/4-18	0.281	0.281	1.09	1.09	0.88	0.88	0.750
5653-06-06-06-06-FG	3/8-18	3/8-18	3/8-18	3/8-18	0.406	0.406	1.22	1.22	1.02	1.02	0.875

MP-FP-FP-FP Cross
5655 Series

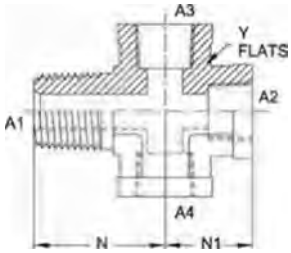

PART NO. SIZE	A1 NPTF	A2 NPTF	A3 NPTF	A4 NPTF	A1 DRILL	N LGTH	N1 LGTH	Y FLATS
5655-04-04-04-04-FG	1/4-18	1/4-18	1/4-18	1/4-18	0.281	1.09	0.88	0.750
5655-06-06-06-06-FG	3/8-18	3/8-18	3/8-18	3/8-18	0.406	1.22	1.02	0.875
5655-08-08-08-08-FG	1/2-14	1/2-14	1/2-14	1/2-14	0.531	1.47	1.23	1.062
5655-12-12-12-12-FG	3/4-14	3/4-14	3/4-14	3/4-14	0.719	1.59	1.36	1.312
5655-16-16-16-16-FG	1-11-1/2	1-11-1/2	1-11-1/2	1-11-1/2	0.938	1.70	1.62	1.625
5655-20-16-08-08-FG	1-1/4-11-1/2	1-11-1/2	1/2-14	1/2-14	1.25	2.38	1.62	1.625

MP-MPS 90°
5700 Series

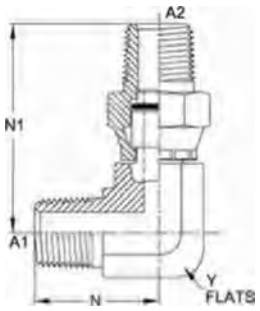

PART NO.SIZE	A1 NPTF	A2 NPTF	A1 DRILL	N LGTH	N1 LGTH	Y FLATS
5700-04-04-FG	1/4-18	1/4-18	0.281	1.07	1.16	0.625
5700-06-06-FG	3/8-18	3/8-18	0.406	1.22	1.64	0.750
5700-08-08-FG	1/2-14	1/2-14	0.531	1.49	2.00	0.875
5700-12-12-FG	3/4-14	3/4-14	0.719	1.52	2.14	1.125

MJ-MPS 90°
5701 Series

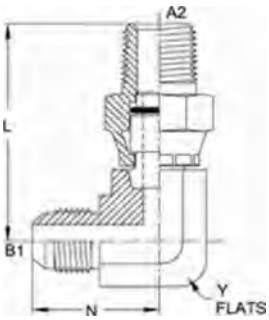

PART NO. SIZE	TUBE O.D.	B1 SAE37	A2 NPTF	B1 DRILL	N LGTH	L LGTH	Y FLATS
5701-06-04-FG	3/8	9/16-18	1/4-18	0.297	1.08	1.59	0.687
5701-06-06-FG	3/8	9/16-18	3/8-18	0.297	1.14	1.66	0.687
5701-08-06-FG	1/2	3/4-16	3/8-18	0.391	1.26	1.66	0.812
5701-08-08-FG	1/2	3/4-16	1/2-14	0.391	1.25	1.80	0.812
5701-10-08-FG	5/8	7/8-14	1/2-14	0.484	1.47	2.00	1.000
5701-12-12-FG	3/4	1-1/16-12	3/4-14	0.609	1.67	2.14	1.125

FP-MPS 90°
5702 Series

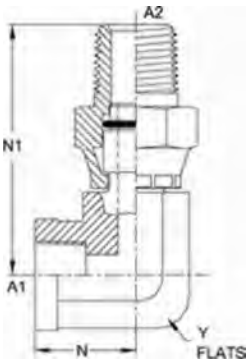

PART NO. SIZE	A1 NPTF	A2 NPTF	N LGTH	N1 LGTH	Y FLATS
5702-04-04-FG	1/4-18	1/4-18	0.89	1.59	0.750
5702-06-06-FG	3/8-18	3/8-18	1.03	1.70	0.875
5702-08-08-FG	1/2-14	1/2-14	1.24	2.01	1.125
5702-12-12-FG	3/4-14	3/4-14	1.37	2.25	1.375

Tube Fittings & Adapters

Back-Up Washer
6000 Series

PART NO.SIZE	TUBE O.D.
6000-02	1/8
6000-03	3/16
6000-04	1/4
6000-05	5/16
6000-06	3/8
6000-08	1/2
6000-10	5/8
6000-12	3/4
6000-14	7/8
6000-16	1
6000-20	1-1/4
6000-24	1-1/2
6000-32	2

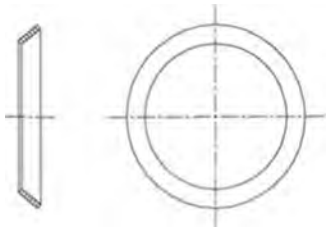

FJS-Weld Straight
6316 Series

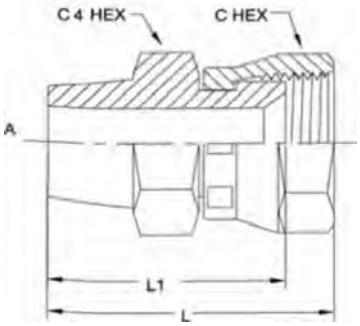

PART NO.SIZE	TUBE O.D.	A Weld	B FJS	B DRILL	LI LOTH	L LGTH	C HEX	C4 HEX
6316-04	1/4	0.250	7/16-20	0.172	1.01	1.364	0.562	0.562
6316-06	3/8	0.375	9/16-18	0.297	1.01	1.470	0.688	0.688
6316-08	1/2	0.500	3/4-16	0.391	1.17	1.609	0.875	0.875
6316-10	5/8	0.625	7/8-14	0.484			1.000	1.000
6316-12	3/4	0.750	1-1/16-12	0.609	1.26	1.837	1.250	1.062
6316-16	1	1.000	1-5/16-12	0.844	1.40	2.003	1.500	1.312
6316-20	1-1/4	1.250	1-5/8-12	1.078	1.63	2.275	2.000	1.750
6316-24	1-1/2	1.500	1-7/8-12	1.078			2.250	2.000

MJ-MORB Straight
6400-0 Series

SAE# 070120 /MS# 51525

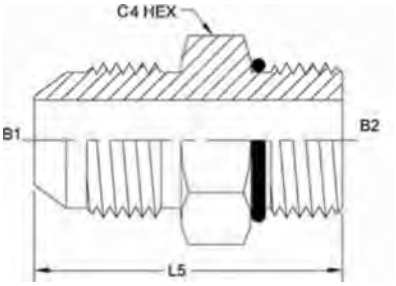

PART NO.SIZE	TUBE O.D.	B1 SAE37	B2 SAEORB	B1 DRILL	B2 DRILL	L5 LGTH	C4 HEX
6400-02-02-0	1/8	5/16-24	5/16-24	0.062	0.062	1.06	0.438
6400-02-06-0	1/8	5/16-24	9/16-18	0.062	0.297	1.19	0.688
6400-03-02-0	3/16	3/8-24	5/16-24	0.125	0.062	1.10	0.500
6400-03-03-0	3/16	3/8-24	3/8-24	0.125	0.125	1.10	0.500
6400-03-04-0	1/4	3/8-24	7/16-20	0.125	0.172	1.16	0.562
6400-04-02-0	1/4	7/16-20	5/16-24	0.172	0.062	1.17	0.500
6400-04-03-0	1/4	7/16-20	3/8-24	0.172	0.125	1.17	0.562
6400-04-04-0	1/4	7/16-20	7/16-20	0.172	0.172	1.23	0.562
6400-04-05-0	1/4	7/16-20	1/2-20	0.172	0.234	1.23	0.625
6400-04-06-0	1/4	7/16-20	9/16-18	0.172	0.297	1.29	0.688
6400-04-08-0	1/4	7/16-20	3/4-16	0.172	0.391	1.37	0.875
6400-04-10-0	1/4	7/16-20	7/8-14	0.172	0.484	1.49	1.000
6400-04-12-0	1/4	7/16-20	1-1/16-12	0.172	0.609	1.66	1.250
6400-05-04-0	5/16	1/2-20	7/16-20	0.234	0.172	1.23	0.562
6400-05-05-0	5/16	1/2-20	1/2-20	0.234	0.234	1.23	0.625
6400-05-06-0	5/16	1/2-20	9/16-18	0.234	0.297	1.29	0.688
6400-05-08-0	5/16	1/2-20	3/4-16	0.234	0.391	1.37	0.875
6400-05-10-0	5/16	1/2-20	7/8-14	0.234	0.484	1.49	1.000
6400-06-03-0	3/8	9/16-18	3/8-24	0.297	0.125	1.30	0.687
6400-06-04-0	3/8	9/16-18	7/16-20	0.297	0.172	1.27	0.687
6400-06-05-0	3/8	9/16-18	1/2-20	0.297	0.234	1.27	0.687
6400-06-06-0	3/8	9/16-18	9/16-18	0.297	0.297	1.30	0.688
6400-06-08-0	3/8	9/16-18	3/4-16	0.297	0.391	1.38	0.875
6400-06-10-0	3/8	9/16-18	7/8-14	0.297	0.484	1.50	1.000
6400-06-12-0	3/8	9/16-18	1-1/16-12	0.297	0.609	1.66	1.250
6400-06-16-0	3/8	9/16-18	1-5/16-12	0.297	0.844	1.68	1.500
6400-08-04-0	1/2	3/4-16	7/16-20	0.391	0.172	1.49	0.875
6400-08-05-0	1/2	3/4-16	1/2-20	0.391	0.234	1.49	0.875
6400-08-06-0	1/2	3/4-16	9/16-18	0.391	0.297	1.44	0.812
6400-08-08-0	1/2	3/4-16	3/4-16	0.391	0.391	1.48	0.875
6400-08-10-0	1/2	3/4-16	7/8-14	0.391	0.484	1.60	1.000
6400-08-12-0	1/2	3/4-16	1-1/16-12	0.391	0.609	1.76	1.250
6400-08-14-0	1/2	3/4-16	1-3/16-12	0.391	0.719	1.76	1.375
6400-08-16-0	1/2	3/4-16	1-5/16-12	0.391	0.844	1.79	1.500
6400-08-20-0	1/2	3/4-16	1-5/8-12	0.391	1.078	1.87	1.875
6400-10-04-0	5/8	7/8-14	7/16-20	0.484	0.172	1.65	1.000
6400-10-06-0	5/8	7/8-14	9/16-18	0.484	0.297	1.71	1.000
6400-10-08-0	5/8	7/8-14	3/4-16	0.484	0.391	1.64	1.000

Continued on next page

Tube Fittings & Adapters

6400-0 Series continued

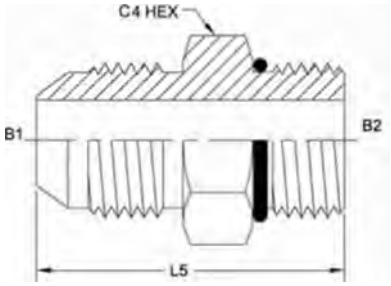

C-086

PART NO.SIZE	TUBE O.D.	B1 SAE37	B2 SAEORB	B1 DRILL	82 DRILL	LS LGTH	C4 HEX
6400-10-10-0	5/8	7/8-14	7/8-14	0.484	0.484	1.70	1.000
6400-10-12-0	5/8	7/8-14	1-1/16-12	0.484	0.609	1.86	1.250
6400-10-14-0	5/8	7/8-14	1-3/16-12	0.484	0.719	1.86	1.375
6400-10-16-0	5/8	7/8-14	1-5/16-12	0.484	0.844	1.89	1.500
6400-10-20-0	5/8	7/8-14	1-5/8-12	0.484	1.078	1.97	1.875
6400-12-06-0	3/4	1-1/16-12	9/16-18	0.609	0.297	1.86	1.125
6400-12-08-0	3/4	1-1/16-12	3/4-16	0.609	0.391	1.94	1.125
6400-12-10-0	3/4	1-1/16-12	7/8-14	0.609	0.484	1.88	1.125
6400-12-12-0	3/4	1-1/16-12	1-1/16-12	0.609	0.609	1.97	1.250
6400-12-14-0	3/4	1-1/16-12	1-3/16-12	0.609	0.719	1.96	1.375
6400-12-16-0	3/4	1-1/16-12	1-5/16-12	0.609	0.844	1.99	1.500
6400-12-20-0	3/4	1-1/16-12	1-5/8-12	0.609	1.078	2.08	1.875
6400-12-24-0	7/8	1-1/16-12	1-7/8-12	0.609	1.312	2.15	2.125
6400-14-08-0	7/8	1-3/16-12	3/4-16	0.719	0.391	1.96	1.250
6400-14-10-0	7/8	1-3/16-12	7/8-14	0.719	0.484	2.02	1.250
6400-14-12-0	7/8	1-3/16-12	1-1/16-12	0.719	0.609	1.99	1.250
6400-14-14-0	7/8	1-3/16-12	1-3/16-12	0.719	0.719	1.99	1.375
6400-14-16-0	7/8	1-3/16-12	1-5/16-12	0.719	0.844	2.02	1.500
6400-16-06-0	1	1-5/16-12	9/16-18	0.844	0.297	1.93	1.375
6400-16-08-0	1	1-5/16-12	3/4-16	0.844	0.391	2.01	1.375
6400-16-10-0	1	1-5/16-12	7/8-14	0.844	0.484	2.07	1.375
6400-16-12-0	1	1-5/16-12	1-1/16-12	0.844	0.609	2.04	1.375
6400-16-14-0	1	1-5/16-12	1-3/16-12	0.844	0.719	2.04	1.375
6400-16-16-0	1	1-5/16-12	1-5/16-12	0.844	0.844	2.04	1.500
6400-16-20-0	1	1-5/16-12	1-5/8-12	0.844	1.078	2.12	1.875
6400-16-24-0	1	1-5/16-12	1-7/8-12	0.844	1.312	2.20	2.125
6400-20-12-0	1-1/4	1-5/8-12	1-1/16-12	1.078	0.609	2.30	1.688
6400-20-16-0	1-1/4	1-5/8-12	1-5/16-12	1.078	0.844	2.33	1.688
6400-20-20-0	1-1/4	1-5/8-12	1-5/8-12	1.078	1.078	2.17	1.875
6400-20-24-0	1-1/4	1-5/8-12	1-7/8-12	1.078	1.312	2.24	2.125
6400-20-32-0	1-1/4	1-5/8-12	2-1/2-12	1.078	1.781	2.40	2.400
6400-20-40-0	1-1/4	1-5/8-12	3-12	1.078	2.318		
6400-24-16-0	1-1/2	1-7/8-12	1-5/16-12	1.312	0.844	2.53	2.750
6400-24-20-0	1-1/2	1-7/8-12	1-5/8-12	1.312	1.078	2.53	2.125
6400-24-24-0	1-1/2	1-7/8-12	1-7/8-12	1.312	1.312	2.37	2.125
6400-24-32-0	1-1/2	1-7/8-12	2-1/2-12	1.312	1.781	2.53	2.750
6400-32-20-0	2	2-1/2-12	1-5/8-12	1.781	1.078	2.94	2.750
6400-32-24-0	2	2-1/2-12	1-7/8-12	1.781	1.312	2.94	2.625
6400-32-32-0	2	2-1/2-12	2-1/2-12	1.781	1.781	2.78	2.750
6400-32-40-0	2	2-1/2-12	3-12	1.781	2.318		

MJ-MORB Straight Long
6400-L-O Series

SAE# 070122 /MS# 51526

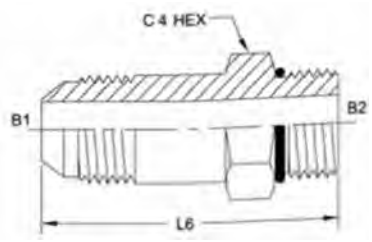

PART NO.SIZE	TUBE O.D.	B1 SAE37	B2 SAEORB	B1 DRILL	B2 DRILL	LG LETX	C4 HEX
6400-L-04-04-0	1/4	7/16-20	7/16-20	0.172	0.172	2.08	0.562
6400-L-05-05-0	5/16	1/2-20	1/2-20	0.234	0.234	2.14	0.625
6400-L-06-06-0	3/8	9/16-18	9/16-18	0.297	0.297	2.31	0.688
6400-L-06-08-0	3/8	9/16-18	3/4-16	0.297	0.391	2.60	0.875
6400-L-08-06-0	1/2	3/4-16	9/16-18	0.391	0.297	2.66	0.875
6400-L-08-08-0	1/2	3/4-16	3/4-16	0.391	0.391	2.70	0.875
6400-L-08-10-0	1/2	3/4-16	7/8-14	0.391	0.484	2.94	1.000
6400-L-10-10-0	5/8	7/8-14	7/8-14	0.484	0.484	3.04	1.000
6400-L-10-16-0	5/8	7/8-14	1-5/16-12	0.484	0.844	3.83	1.500
6400-L-12-08-0	3/4	1-1/16-12	3/4-16	0.609	0.391	3.46	1.125
6400-L-12-10-0	3/4	1-1/16-12	7/8-14	0.609	0.484	3.52	1.125
6400-L-12-12-0	3/4	1-1/16-12	1-1/16-12	0.609	0.609	3.61	1.250
6400-L-12-16-0	3/4	1-1/16-12	1-5/16-12	0.609	0.844	3.93	1.500
6400-L-14-14-0	7/8	1-3/16-12	1-3/16-12	0.719	0.719	3.80	1.375
6400-L-16-16-0	1	1-5/16-12	1-5/16-12	0.844	0.844	3.98	1.500
6400-L-20-20-0	1-1/4	1-5/8-12	1-5/8-12	1.078	1.078	4.69	1.875
6400-L-24-24-O	1-1/2	1-7/8-12	1-7/8-12	1.312	1.312	5.17	2.125

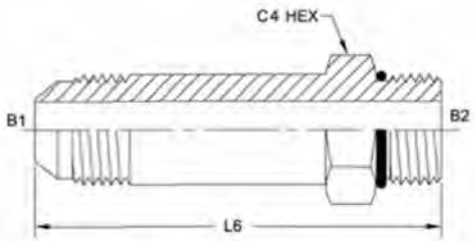

MJ-MORB Straight Extra Long 6400-LL-O Series

PART ND.SIZE	TUBE O.D.	B1 SAE37	B2 SAEORB	B1 DRILL	B2 DRILL	L6 LGTH	C4 HEX
6400-LL-06-08-0	3/8	9/16-18	3/4-16	0.297	0.391		0.875
6400-LL-16-16-0	1	1-5/16-12	1-5/16-12	0.844	0.844	5.27	1.500

Tube Fittings & Adapters

MORB-MP **Straight**
6401-0 Series

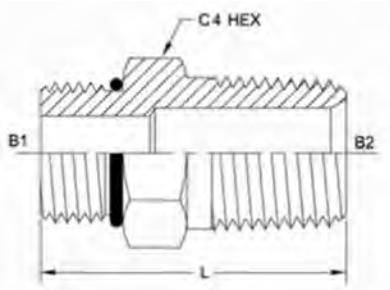

C-088

PART NO.SIZE	TUBE O.D.	B SAE ORB	B2 NPTF	B DRILL	B2 DRILL	L LGTH	C4 HEX
6401-02-02-0	1/4	5/16-24	1/8-27	0.062	0.188	1.01	0.438
6401-03-02-0	1/4	3/8-24	1/8-27	0.125	0.188	1.01	0.500
6401-04-02-0	1/4	7/16-20	1/8-27	0.172	0.188	1.07	0.562
6401-04-04-0	1/4	7/16-20	1/4-18	0.172	0.281	1.25	0.562
6401-05-02-0	5/16	1/2-20	1/8-27	0.234	0.188	1.07	0.625
6401-05-04-0	5/16	1/2-20	1/4-18	0.234	0.281	1.25	0.625
6401-06-02-0	3/8	9/16-18	1/8-27	0.297	0.188	1.13	0.688
6401-06-04-0	3/8	9/16-18	1/4-18	0.297	0.281	1.31	0.688
6401-06-06-0	3/8	9/16-18	3/8-18	0.297	0.406	1.31	0.750
6401-06-08-0	3/8	9/16-18	1/2-14	0.297	0.531	1.61	0.875
6401-08-04-0	1/2	3/4-16	1/4-18	0.391	0.281	1.39	0.875
6401-08-06-0	1/2	3/4-16	3/8-18	0.391	0.406	1.39	0.875
6401-08-08-0	1/2	3/4-16	1/2-14	0.391	0.531	1.58	0.875
6401-08-12-0	1/2	3/4-16	3/4-14	0.391	0.719	1.77	1.125
6401-10-04-0	5/8	7/8-14	1/4-18	0.484	0.281	1.51	1.000
6401-10-06-0	5/8	7/8-14	3/8-18	0.484	0.406	1.51	1.000
6401-10-08-0	5/8	7/8-14	1/2-14	0.484	0.531	1.70	1.000
6401-10-12-0	5/8	7/8-14	3/4-14	0.484	0.719	1.70	1.125
6401-12-06-0	3/4	1-1/16-12	3/8-18	0.609	0.406	1.67	1.250
6401-12-08-0	3/4	1-1/16-12	1/2-14	0.609	0.531	1.86	1.250
6401-12-12-0	3/4	1-1/16-12	3/4-14	0.609	0.719	1.86	1.250
6401-12-16-0	3/4	1-1/16-12	1-11-1/2	0.609	0.938	2.05	1.375
6401-14-12-0	7/8	1-3/16-12	3/4-14	0.719	0.719	1.86	1.375
6401-14-16-0	7/8	1-3/16-12	1-11-1/2	0.719	0.938	2.05	1.375
6401-16-12-0	1	1-5/16-12	3/4-14	0.844	0.719	1.89	1.500
6401-16-16-0	1	1-5/16-12	1-11-1/2	0.844	0.938	2.08	1.500
6401-16-20-0	1	1-5/16-12	1-1/4-11-1/2	0.844	1.250	2.29	1.688
6401-20-12-0	1-1/4	1-5/8-12	3/4-14	1.078	0.719	1.97	1.875
6401-20-16-0	1-1/4	1-5/8-12	1-11-1/2	1.078	0.938	2.16	1.875
6401-20-20-0	1-1/4	1-5/8-12	1-1/4-11-1/2	1.078	1.250	2.19	1.875
6401-20-24-0	1-1/4	1-5/8-12	1-1/2-11-1/2	1.078	1.500	2.40	2.000
6401-24-16-0	1-1/2	1-7/8-12	1-11-1/2	1.312	0.938	2.23	2.125
6401-24-20-0	1-1/2	1-7/8-12	1-1/4-11-1/2	1.312	1.250	2.26	2.125
6401-24-24-0	1-1/2	1-7/8-12	1-1/2-11-1/2	1.312	1.500	2.29	2.125
6401-32-32-0	2	2-1/2-12	2-11-1/2	1.781	1.938	2.48	2.750

MORB-FJS Straight
6402-0 Series

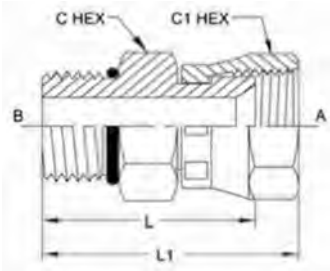

PART NO.SIZE	TUBE 0.0.	B SAEORB	A SAE37	B DRILL	A DRILL	L LOTH	11 LGTH	CI HEX	C HEX
6402-04-04-0	1/4	7/16-20	7/16-20	0.172	0.172	1.02	1.31	0.562	0.562
6402-04-06-0	1/4	7/16-20	9/16-18	0.172	0.297	1.09	1.42	0.688	0.562
6402-06-04-0	3/8	9/16-18	7/16-20	0.297	0.172	1.08	1.37	0.562	0.688
6402-06-06-0	3/8	9/16-18	9/16-18	0.297	0.297	1.15	1.48	0.688	0.688
6402-06-08-0	3/8	9/16-18	3/4-16	0.297	0.391	1.20	1.58	0.875	0.812
6402-08-06-0	1/2	3/4-16	9/16-18	0.391	0.297	1.23	1.56	0.688	0.875
6402-08-08-0	1/2	3/4-16	3/4-16	0.391	0.391	1.28	1.65	0.875	0.875
6402-08-10-0	1/2	3/4-16	7/8-14	0.391	0.484	1.31	1.76	1.000	0.875
6402-10-08-0	5/8	7/8-14	3/4-16	0.484	0.391	1.40	1.78	0.875	1.000
6402-10-10-0	5/8	7/8-14	7/8-14	0.484	0.484	1.43	1.88	1.000	1.000
6402-12-10-0	3/4	1-1/16-12	7/8-14	0.609	0.484	1.60	2.05	1.000	1.250
6402-12-12-0	3/4	1-1/16-12	1-1/16-12	0.609	0.609	1.63	2.15	1.250	1.250
6402-16-16-0	1	1-5/16-12	1-5/16-12	0.846	0.844	1.72	2.27	1.500	1.500
6402-20-20-0	1-1/4	1-5/8-12	1-5/8-12	1.078	1.078	1.85	2.40	2.000	1.875
6402-24-24-0	1-1/2	1-7/8-12	1-7/8-12	1.312	1.312	1.99	2.67	2.250	2.125
6402-32-32-0	2	2-1/2-12	2-1/2-12	1.781	1.781	2.18	3.07	2.875	2.750

FORB-MP Straight
6404 Series

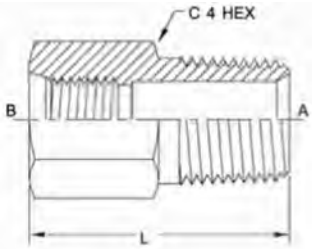

PART NO.SIZE	TUBE 0.0.	B SAEORB	A NPTF	A DRILL	I LGTH	C4 HEX
6404-03-06	3/16	3/8-24	3/8-18	0.406	0.85	0.750
6404-04-02	1/4	7/16-20	1/8-27	0.188	1.12	0.688
6404-04-04	1/4	7/16-20	1/4-18	0.281	1.30	0.688
6404-04-06	1/4	7/16-20	3/8-18	0.406	1.30	0.750
6404-05-02	5/16	1/2-20	1/8-27	0.188	1.17	0.750
6404-05-04	5/16	1/2-20	1/4-18	0.281	1.35	0.750
6404-05-06	5/16	1/2-20	3/8-18	0.406	1.35	0.750
6404-06-04	3/8	9/16-18	1/4-18	0.281	1.35	0.812
6404-06-06	3/8	9/16-18	3/8-18	0.406	1.35	0.812
6404-06-08	3/8	9/16-18	1/2-14	0.531	1.54	0.875
6404-08-04	1/2	3/4-16	1/4-18	0.281	1.46	1.062
6404-08-06	1/2	3/4-16	3/8-18	0.406	1.46	1.062
6404-08-08	1/2	3/4-16	1/2-14	0.531	1.65	1.062
6404-08-12	1/2	3/4-16	3/4-14	0.719	1.65	1.125
6404-10-06	5/8	7/8-14	3/8-18	0.406	1.55	1.125
6404-10-08	5/8	7/8-14	1/2-14	0.531	1.74	1.125
6404-10-12	5/8	7/8-14	3/4-14	0.719	1.74	1.125
6404-12-08	3/4	1-1/16-12	1/2-14	0.531	1.91	1.375
6404-12-12	3/4	1-1/16-12	3/4-14	0.719	1.91	1.375
6404-14-12	7/8	1-3/16-12	3/4-14	0.719	1.91	1.625
6404-16-12	1	1-5/16-12	3/4-14	0.719	1.91	1.625
6404-16-16	1	1-5/16-12	1-11-1/2	0.938	2.10	1.625
6404-16-20	1	1-5/16-12	1-1/4-11-1/2	1.250	2.13	1.688
6404-16-24	1	1-5/16-12	1-1/2-11-1/2	1.500	1.57	2.000
6404-20-16	1-1/4	1-5/8-12	1-11-1/2	0.938	2.16	2.125
6404-20-20	1-1/4	1-5/8-12	1-1/4-11-1/2	1.250	2.19	2.125
6404-24-24	1-1/2	1-7/8-12	1-1/2-11-1/2	1.500	2.23	2.500
6404-32-32	2	2-1/2-12	2-11-1/2	1.938	2.26	2.875

Tube Fittings & Adapters

MORB-FP Straight
6405-0 Series

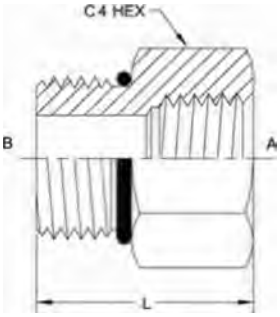

C-090

PART NO.SIZE	TUBE 0.0.	B SAEORB	A NPTf	B DRILL	L LOTH	C4 HEX
6405-02-02-0	1/8	5/16-24	1/8-27	0.062	0.93	0.562
6405-02-04-0	1/8	5/16-24	1/4-18	0.062	1.24	0.750
6405-03-04-0	3/16	3/8-24	1/4-18	0.125	1.24	0.750
6405-04-02-0	1/4	7/16-20	1/8-27	0.172	0.99	0.562
6405-04-04-0	1/4	7/16-20	1/4-18	0.172	1.31	0.750
6405-04-06-0	1/4	7/16-20	3/8-18	0.172	1.37	0.875
6405-05-02-0	5/16	1/2-20	1/8-27	0.234	0.99	0.625
6405-05-04-0	5/16	1/2-20	1/4-18	0.234	1.20	0.750
6405-05-06-0	5/16	1/2-20	3/8-18	0.234	1.37	0.875
6405-06-02-0	3/8	9/16-18	1/8-27	0.297	1.02	0.688
6405-06-04-0	3/8	9/16-18	1/4-18	0.297	1.23	0.750
6405-06-06-0	3/8	9/16-18	3/8-18	0.297	1.40	0.875
6405-06-08-0	3/8	9/16-18	1/2-14	0.297	1.63	1.125
6405-08-02-0	1/2	3/4-16	1/8-27	0.391	1.07	0.875
6405-08-04-0	1/2	3/4-16	1/4-18	0.391	1.28	0.875
6405-08-06-0	1/2	3/4-16	3/8-18	0.391	1.33	0.875
6405-08-08-0	1/2	3/4-16	1/2-14	0.391	1.71	1.125
6405-08-12-0	1/2	3/4-16	3/4-14	0.391	1.78	1.375
6405-10-04-0	5/8	7/8-14	1/4-18	0.484	1.34	1.000
6405-10-06-0	5/8	7/8-14	3/8-18	0.484	1.40	1.000
6405-10-08-0	5/8	7/8-14	1/2-14	0.484	1.63	1.125
6405-10-12-0	5/8	7/8-14	3/4-14	0.484	1.84	1.375
6405-12-04-0	3/4	1-1/16-12	1/4-18	0.609	1.43	1.250
6405-12-06-0	3/4	1-1/16-12	3/8-18	0.609	1.49	1.250
6405-12-08-0	3/4	1-1/16-12	1/2-14	0.609	1.72	1.250
6405-12-12-0	3/4	1-1/16-12	3/4-14	0.609	1.78	1.375
6405-12-16-0	3/4	1-1/16-12	1-11-1/2	0.609	2.18	1.625
6405-14-08-0	7/8	1-3/16-12	1/2-14	0.719	1.72	1.375
6405-14-12-0	7/8	1-3/16-12	3/4-14	0.719	1.78	1.375
6405-14-16-0	7/8	1-3/16-12	1-11-1/2	0.719	2.18	1.625
6405-16-04-0	1	1-5/16-12	1/4-18	0.844	1.43	1.500
6405-16-06-0	1	1-5/16-12	3/8-18	0.844	1.49	1.500
6405-16-08-0	1	1-5/16-12	1/2-14	0.844	1.72	1.500
6405-16-12-0	1	1-5/16-12	3/4-14	0.844	1.78	1.500
6405-16-16-0	1	1-5/16-12	1-11-1/2	0.844	2.03	1.625
6405-16-20-0	1	1-5/16-12	1-1/4-11-1/2	0.844	2.30	2.000
6405-16-24-0	1	1-5/16-12	1-1/2-11-1/2	0.844	2.30	2.375
6405-20-08-0	1-1/4	1-5/8-12	1/2-14	1.078	1.72	1.875
6405-20-12-0	1-1/4	1-5/8-12	3/4-14	1.078	1.78	1.875
6405-20-16-0	1-1/4	1-5/8-12	1-11-1/2	1.078	2.03	1.875
6405-20-20-0	1-1/4	1-5/8-12	1-1/4-11-1/2	1.078	2.30	2.000
6405-20-24-0	1-1/4	1-5/8-12	1-1/2-11-1/2	1.078	2.30	2.375
6405-20-32-0	1-1/4	1-5/8-12	2-11-1/2	1.078	2.40	2.875
6405-24-04-0	1-1/2	1-7/8-12	1/4-18	1.312	1.43	2.125
6405-24-12-0	1-1/2	1-7/8-12	3/4-14	1.312	1.78	2.125
6405-24-16-0	1-1/2	1-7/8-12	1-11-1/2	1.312	2.03	2.125
6405-24-20-0	1-1/2	1-7/8-12	1-1/4-11-1/2	1.312	2.12	2.125
6405-24-24-0	1-1/2	1-7/8-12	1-1/2-11-1/2	1.312	2.30	2.375
6405-32-16-0	2	2-1/2-12	1-11-1/2	1.781	2.03	2.750
6405-32-20-0	2	2-1/2-12	1-1/4-11-1/2	1.781	2.12	2.750
6405-32-24-0	2	2-1/2-12	1-1/2-11-1/2	1.781	2.12	2.750
6405-32-32-0	2	2-1/2-12	2-11-1/2	1.781	2.22	2.875

MORB External Hex Plug
6408-0 Series

SAE# 090109A

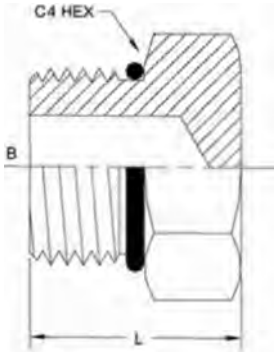

PART ND.SIZE	TUBE O.D.	B SAE ORB	L LGTH	C4 HEX
6408-02-0	1/8	5/16-24	0.60	0.438
6408-03-0	3/16	3/8-24	0.60	0.500
6408-04-0	1/4	7/16-20	0.67	0.562
6408-05-0	5/16	1/2-20	0.67	0.625
6408-06-0	3/8	9/16-18	0.73	0.687
6408-08-0	1/2	3/4-16	0.80	0.875
6408-10-0	5/8	7/8-14	0.93	1.000
6408-12-0	3/4	1-1/16-12	1.09	1.250
6408-14-0	7/8	1-3/16-12	1.09	1.375
6408-16-0	1	1-5/16-12	1.12	1.500
6408-20-0	1-1/4	1-5/8-12	1.20	1.875
6408-24-0	1-1/2	1-7/8-12	1.27	2.125
6408-32-0	2	2-1/2-12	1.43	2.750

MORB Hollow Hex Plug
6408-H-O Series

SAE# 090109B

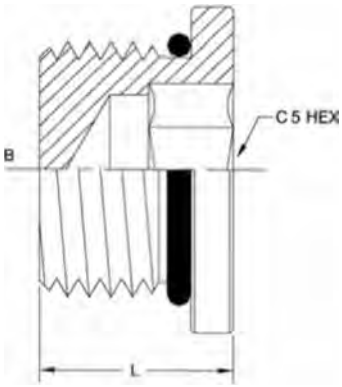

PART NO.SIZE	TUBE 0.0.	B SAE ORB	L LGTH	C5 HEX
6408-H02-0	1/8	5/16-24	0.40	0.125
6408-H03-O	3/16	3/8-24	0.40	0.125
6408-H04-0	1/4	7/16-20	0.47	0.188
6408-H05-0	5/16	1/2-20	0.47	0.188
6408-H06-0	3/8	9/16-18	0.50	0.250
6408-H08-0	1/2	3/4-16	0.58	0.312
6408-H10-0	5/8	7/8-14	0.65	0.375
6408-H12-O	3/4	1-1/16-12	0.77	0.562
6408-H14-O	7/8	1-3/16-12	0.77	0.562
6408-H16-O	1	1-5/16-12	0.77	0.625
6408-H20-0	1-1/4	1-5/8-12	0.77	0.750
6408-H24-O	1-1/2	1-7/8-12	0.77	0.750
6408-H32-O	2	2-1/2-12	0.77	0.750

MORB-FORB
Straight Reducer
6410-0 Series

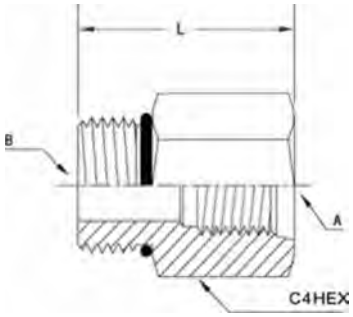

PART NO.SIZE	B SAEORB	A SAEORB	B DRILL	L LGTH	C4 HEX
6410-02-04-0	5/16-24	7/16-20	0.062	1.13	0.688
6410-03-04-0	3/8-24	7/16-20	0.125	1.13	0.688
6410-04-02-0	7/16-20	5/16-24	0.172	1.08	0.562
6410-04-04-0	7/16-20	7/16-20	0.172	1.08	0.688
6410-04-05-0	7/16-20	1/2-20	0.172	1.24	0.750
6410-04-06-0	7/16-20	9/16-18	0.172	1.24	0.812
6410-04-08-0	7/16-20	3/4-16	0.172	1.35	1.062
6410-05-04-0	1/2-20	7/16-20	0.234	1.08	0.688
6410-05-06-0	1/2-20	9/16-18	0.234	1.24	0.812
6410-06-04-0	9/16-18	7/16-20	0.297	1.12	0.688
6410-06-06-0	9/16-18	9/16-18	0.297	1.16	0.812
6410-06-08-0	9/16-18	3/4-16	0.297	1.38	1.062
6410-06-10-0	9/16-18	7/8-14	0.297	1.48	1.125
6410-08-03-0	3/4-16	3/8-24	0.391	0.85	0.875
6410-08-04-0	3/4-16	7/16-20	0.391	1.16	0.875
6410-08-05-0	3/4-16	1/2-20	0.391	1.21	0.875
6410-08-06-0	3/4-16	9/16-18	0.391	1.21	0.875
6410-08-08-0	3/4-16	3/4-16	0.391	1.47	1.062
6410-08-10-0	3/4-16	7/8-14	0.391	1.56	1.125
6410-08-12-0	3/4-16	1-1/16-12	0.391	1.73	1.375
6410-10-04-0	7/8-14	7/16-20	0.484	0.91	1.000
6410-10-05-0	7/8-14	1/2-20	0.484	1.27	1.000
6410-10-06-0	7/8-14	9/16-18	0.484	1.27	1.000
6410-10-08-0	7/8-14	3/4-16	0.484	1.38	1.062
6410-10-12-0	7/8-14	1-1/16-12	0.484	1.79	1.375
6410-10-16-0	7/8-14	1-5/16-12	0.484	1.79	1.625
6410-12-04-0	1-1/16-12	7/16-20	0.609	1.00	1.250
6410-12-06-0	1-1/16-12	9/16-18	0.609	1.00	1.250
6410-12-08-0	1-1/16-12	3/4-16	0.609	1.48	1.250
6410-12-10-0	1-1/16-12	7/8-14	0.609	1.57	1.250
6410-12-12-0	1-1/16-12	1-1/16-12	0.609	1.73	1.375
6410-12-14-0	1-1/16-12	1-3/16-12	0.609	1.88	1.625
6410-12-16-0	1-1/16-12	1-5/16-12	0.609	1.88	1.625

Continued on next page

6410-0 Series continued

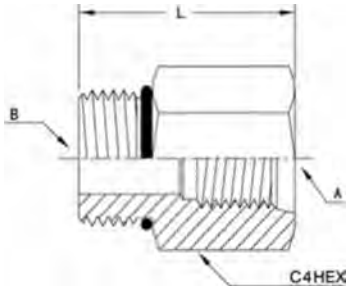

PART NO.SIZE	B SAEORB	A SAE ORB	B DRILL	L LOTH	C4 HEX
6410-12-20-0	1-1/16-12	1-5/8-12	0.609	1.94	2.125
6410-14-08-0	1-3/16-12	3/4-16	0.719	1.48	1.375
6410-14-10-0	1-3/16-12	7/8-14	0.719	1.57	1.375
6410-14-12-0	1-3/16-12	1-1/16-12	0.719	1.73	1.375
6410-14-16-0	1-3/16-12	1-5/16-12	0.719	1.88	1.625
6410-16-04-0	1-5/16-12	7/16-20	0.844	1.00	1.500
6410-16-06-0	1-5/16-12	9/16-18	0.844	1.00	1.500
6410-16-08-0	1-5/16-12	3/4-16	0.844	1.00	1.500
6410-16-10-0	1-5/16-12	7/8-14	0.844	1.57	1.500
6410-16-12-0	1-5/16-12	1-1/16-12	0.844	1.73	1.500
6410-16-14-0	1-5/16-12	1-3/16-12	0.844	1.73	1.625
6410-16-16-0	1-5/16-12	1-5/16-12	0.844	1.73	1.625
6410-16-20-0	1-5/16-12	1-5/8-12	0.844	1.97	2.125
6410-16-24-0	1-5/16-12	1-7/8-12	0.844	1.98	2.500
6410-20-06-0	1-5/8-12	9/16-18	1.078	1.00	1.875
6410-20-08-0	1-5/8-12	3/4-16	1.078	1.00	1.875
6410-20-10-0	1-5/8-12	7/8-14	1.078	1.00	1.875
6410-20-12-0	1-5/8-12	1-1/16-12	1.078	1.00	1.875
6410-20-16-0	1-5/8-12	1-5/16-12	1.078	1.73	1.875
6410-20-24-0	1-5/8-12	1-7/8-12	1.078	1.98	2.500
6410-24-06-0	1-7/8-12	9/16-18	1.312	1.00	2.125
6410-24-12-0	1-7/8-12	1-1/16-12	1.312	1.00	2.125
6410-24-16-0	1-7/8-12	1-5/16-12	1.312	1.73	2.125
6410-24-20-0	1-7/8-12	1-5/8-12	1.312	1.79	2.125
6410-24-24-0	1-7/8-12	1-7/8-12	1.312	1.98	2.500
6410-32-12-0	2-1/2-12	1-1/16-12	1.781	1.00	2.750
6410-32-16-0	2-1/2-12	1-5/16-12	1.781	1.00	2.750
6410-32-20-0	2-1/2-12	1-5/8-12	1.781	1.00	2.750
6410-32-24-0	2-1/2-12	1-7/8-12	1.781	1.80	2.750

FORB-FP Straight
6420-0 Series

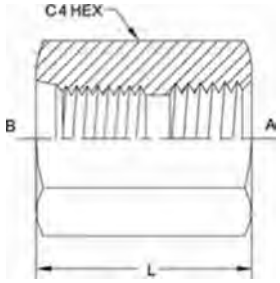

PART NO.SIZE	TUBE O.D.	B SAEOHB	A NPTF	I LGTH	C4 HEX
6420-06-06	3/8	9/16-18	3/8-18	1.32	0.875
6420-08-04	1/2	3/4-16	1/4-18	1.39	1.062
6420-08-08	1/2	3/4-16	1/2-14	1.62	1.125
6420-10-08	7/8	7/8-14	1/2-14	1.72	1.125

FORB-FORB Straight
6425 Series

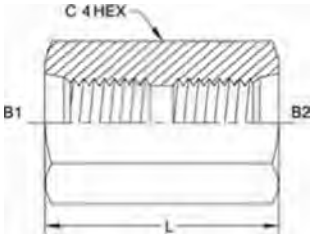

PART NO.SIZE	TUBE O.D.	B1 SAEORB	B2 SAEORB	I LGTH	C4 HEX
6425-08-08	1/2	3/4-16	3/4-16	1.42	1.062
6425-10-10	5/8	7/8-14	7/8-14	1.60	1.125
6425-12-12	3/4	1-1/16-12	1-1/16-12	1.84	1.375
6425-16-16	1	1-5/16-12	1-5/16-12	1.84	1.625

MORB-MORB Straight
6464-0 Series

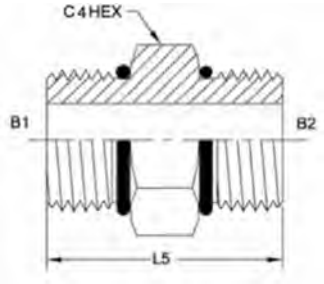

PART NO.SIZE	TUBE O.D.	B1 SAEORB	B2 SAE ORB	B1 DRILL	82 DRILL	L5 LGTH	C4 HEX
6464-04-04-0	1/4	7/16-20	7/16-20	0.172	0.172	1.03	0.562
6464-08-08-0	1/2	3/4-16	3/4-16	0.391	0.391	1.25	0.875
6464-10-08-0	5/8	7/8-14	3/4-16	0.484	0.391	1.37	1.000
6464-10-10-0	5/8	7/8-14	7/8-14	0.484	0.484	1.43	1.000
6464-16-12-0	1	1-5/16-12	1-1/16-12	0.844	0.609	1.72	1.500
6464-16-16-0	1	1-5/16-12	1-5/16-12	0.844	0.844	1.72	1.500
6464-20-20-0	1-1/4	1-5/8-12	1-5/8-12	1.078	1.078	1.80	1.875
6464-24-24-0	1-1/2	1-7/8-12	1-7/8-12	1.312	1.312	1.87	2.125

MORB-MORB Straight
6464-L-O Series

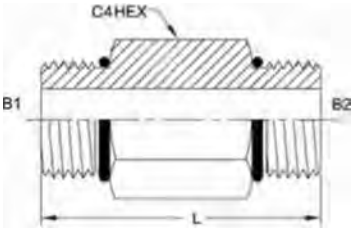

PART NO.SIZE	TUBE O.D.	B1 SAEORB	B2 SAEORB	B1 DRILL	B2 DRILL	L LGTH	C4 HEX
6464-L-06-06-O	3/8	9/16-18	9/16-18	0.297	0.297	1.49	0.688
6464-L-08-08-O	1/2	3/4-16	3/4-16	0.391	0.391	1.76	0.875
6464-L-10-08-0	5/8	7/8-14	3/4-16	0.484	0.391	1.82	1.000
6464-L-10-10-0	5/8	7/8-14	7/8-14	0.484	0.484	1.80	1.000
6464-L-16-12-0	1	1-5/16-12	1-1/16-12	0.844	0.609	2.19	1.500

MJ-FJS 90°
6500 Series

SAE# 070221

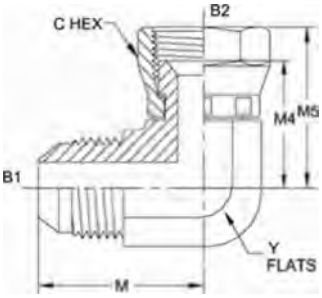

PART NO.SIZE	TUBE O.D.	B1 SAE37	B2 SAE37	B1 DRILL	B2 DRILL	M LGTH	M4 LGTH	M5 LGTH	C HEX	Y FIATS
6500-02-02-FG	1/8	5/16-24	5/16-24	0.062	0.062	0.77	0.66	0.97	0.438	0.438
6500-03-03-FG	3/16	3/8-24	3/8-24	0.125	0.125	0.83	0.67	1.00	0.500	0.438
6500-04-04-FG	1/4	7/16-20	7/16-20	0.172	0.172	0.89	0.65	1.00	0.563	0.438
6500-04-06-FG	1/4	7/16-20	9/16-18	0.172	0.297	1.05	0.87	1.25	0.688	0.562
6500-05-05-FG	5/16	1/2-20	1/2-20	0.234	0.234	0.95	0.67	1.06	0.625	0.562
6500-05-06-FG	5/16	1/2-20	9/16-18	0.234	0.297	0.95	0.87	1.25	0.688	0.562
6500-06-04-FG	3/8	9/16-18	7/16-20	0.297	0.172	1.06	0.80	1.15	0.563	0.562
6500-06-06-FG	3/8	9/16-18	9/16-18	0.297	0.297	1.06	0.87	1.25	0.688	0.562
6500-06-08-FG	3/8	9/16-18	3/4-16	0.297	0.391	1.25	0.95	1.38	0.875	0.750
6500-08-06-FG	1/2	3/4-16	9/16-18	0.391	0.297	1.25	0.91	1.29	0.688	0.750
6500-08-08-FG	1/2	3/4-16	3/4-16	0.391	0.391	1.25	0.95	1.38	0.875	0.750
6500-08-10-FG	1/2	3/4-16	7/8-14	0.391	0.484	1.45	1.12	1.62	1.000	0.875
6500-08-12-FG	1/2	3/4-16	1-1/16-12	0.391	0.609	1.66	1.18	1.75	1.250	1.062
6500-10-08-FG	5/8	7/8-14	3/4-16	0.484	0.391	1.45	1.09	1.52	0.875	0.875
6500-10-10-FG	5/8	7/8-14	7/8-14	0.484	0.484	1.45	1.12	1.62	1.000	0.875
6500-10-12-FG	5/8	7/8-14	1-1/16-12	0.484	0.609	1.66	1.18	1.75	1.250	1.062
6500-12-08-FG	3/4	1-1/16-12	3/4-16	0.609	0.391	1.66	1.12	1.55	0.875	1.062
6500-12-10-FG	3/4	1-1/16-12	7/8-14	0.609	0.484	1.66	1.16	1.66	1.000	1.062
6500-12-12-FG	3/4	1-1/16-12	1-1/16-12	0.609	0.609	1.66	1.18	1.75	1.250	1.062
6500-12-16-FG	3/4	1-1/16-12	1-5/16-12	0.609	0.844	1.81	1.40	2.00	1.500	1.312
6500-14-14-FG	7/8	1-3/16-12	1-3/16-12	0.719	0.719	1.80	1.20	1.78	1.375	1.312
6500-16-12-FG	1	1-5/16-12	1-1/16-12	0.844	0.609	1.81	1.34	1.91	1.250	1.312
6500-16-16-FG	1	1-5/16-12	1-5/16-12	0.844	0.844	1.81	1.40	2.00	1.500	1.312
6500-20-20-FG	1-1/4	1-5/8-12	1-5/8-12	1.078	1.078	2.06	1.67	2.31	2.000	1.625
6500-24-24-FG	1-1/2	1-7/8-12	1-7/8-12	1.312	1.312	2.33	1.87	2.59	2.250	1.875
6500-32-32-FG	2	2-1/2-12	2-1/2-12	1.781	1.781	3.06	2.43	3.38	2.875	2.500

Tube Fittings & Adapters

MJ-FJS 90°
6500-L Series

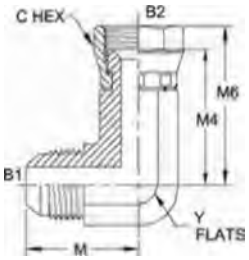

PART NO.SIZE	TUBE O.D.	B1 SAE37	B2 SAE37	B1 DRILL	B2 DRILL	M LGTH	M4 L6TH	M6 LGTH	C HEX	Y FLATS
6500-L-04-04-FG	1/4	7/16-20	7/16-20	0.172	0.172	0.89	1.81	2.16	0.562	0.438
6500-L-06-06-FG	3/8	9/16-18	9/16-18	0.297	0.297	1.06	2.16	2.54	0.688	0.562
6500-L-08-08-FG	1/2	3/4-16	3/4-16	0.391	0.391	1.25	2.38	2.81	0.875	0.750
6500-L-10-10-FG	5/8	7/8-14	7/8-14	0.484	0.484	1.45	2.57	3.07	1.000	0.875
6500-L-12-12-FG	3/4	1-1/16-12	1-1/16-12	0.609	0.609	1.66	3.73	4.30	1.250	1.062
6500-L-16-16-FG	1	1-5/16-12	1-5/16-12	0.844	0.844	1.81	4.40	5.00	1.500	1.312

MP-FJS 90°
6501 Series

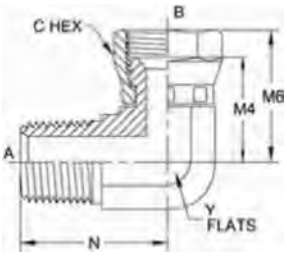

PART NO.SIZE	TUBE O.D.	A NPTF	B SAE37	A DRILL	B DRILL	M4 LGTH	MB LGTH	N LGTH	C HEX	Y FLATS
6501-02-04-FG	1/4	1/8-27	7/16-20	0.188	0.172	0.65	1.00	0.72	0.562	0.438
6501-02-05-FG	5/16	1/8-27	1/2-20	0.188	0.234	0.67	1.06	0.78	0.625	0.562
6501-04-04-FG	1/4	1/4-18	7/16-20	0.281	0.172	0.80	1.15	1.09	0.562	0.562
6501-04-05-FG	5/16	1/4-18	1/2-20	0.281	0.234	0.67	1.06	1.09	0.625	0.562
6501-04-06-FG	3/8	1/4-18	9/16-18	0.281	0.297	0.87	1.25	1.09	0.688	0.562
6501-06-04-FG	1/4	3/8-18	7/16-20	0.406	0.172	0.83	1.18	1.22	0.562	0.750
6501-06-06-FG	3/8	3/8-18	9/16-18	0.406	0.297	0.91	1.29	1.22	0.688	0.750
6501-06-08-FG	1/2	3/8-18	3/4-16	0.406	0.391	0.95	1.38	1.22	0.875	0.750
6501-08-06-FG	3/8	1/2-14	9/16-18	0.531	0.297	1.04	1.42	1.47	0.688	0.875
6501-08-08-FG	1/2	1/2-14	3/4-16	0.531	0.391	1.09	1.52	1.47	0.875	0.875
6501-08-10-FG	5/8	1/2-14	7/8-14	0.531	0.484	1.12	1.62	1.47	1.000	0.875
6501-12-12-FG	3/4	3/4-14	1-1/16-12	0.719	0.609	1.18	1.75	1.59	1.250	1.062
6501-12-14-FG	7/8	3/4-14	1-3/16-12	0.719	0.719	1.20	1.78	1.69	1.375	1.312
6501-16-16-FG	1	1-11-1/2	1-5/16-12	0.938	0.844	1.40	2.00	1.97	1.500	1.312
6501-20-20-FG	1-1/4	1-1/4-11-1/2	1-5/8-12	1.25	1.078	1.67	2.31	2.38	2.000	1.625
6501-24-24-FG	1-1/2	1-1/2-11-1/2	1-7/8-12	1.5	1.312	1.87	2.59	2.64	2.250	1.875
6501-32-32-FG	2	2-11-1/2	2-1/2-12	1.938	1.781	2.43	3.38	3	2.875	2.500

MJ-FJS 45°
6502 Series

SAE# 070321 / MS# 51522

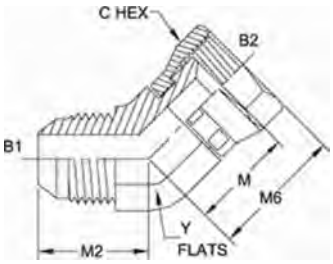

PART NO.SIZE	TUBE O.D.	B1 SAE 37	B2 SAE 37	B1 DRILL	B2 DRILL	M2 LGTH	M LGTH	M6 LGTH	C HEX	Y FLATS
6502-02-02-FG	1/8	5/16-24	5/16-24	0.062	0.062	0.69	0.63	0.94	0.438	0.438
6502-04-04-FG	1/4	7/16-20	7/16-20	0.172	0.172	0.72	0.59	0.94	0.563	0.438
6502-05-05-FG	5/16	1/2-20	1/2-20	0.234	0.234	0.77	0.62	1.00	0.625	0.562
6502-06-06-FG	3/8	9/16-18	9/16-18	0.297	0.297	0.83	0.82	1.12	0.688	0.562
6502-08-08-FG	1/2	3/4-16	3/4-16	0.391	0.391	0.98	0.85	1.28	0.875	0.750
6502-10-08-FG	5/8	7/8-14	3/4-16	0.484	0.391	1.11	0.91	1.34	0.875	0.875
6502-10-10-FG	5/8	7/8-14	7/8-14	0.484	0.484	1.11	0.94	1.44	1.000	0.875
6502-12-12-FG	3/4	1-1/16-12	1-1/16-12	0.609	0.609	1.28	0.93	1.50	1.250	1.062
6502-14-14-FG	7/8	1-3/16-12	1-3/16-12	0.719	0.719	1.45	1.04	1.62	1.375	1.312
6502-16-16-FG	1	1-5/16-12	1-5/16-12	0.844	0.844	1.47	1.15	1.75	1.500	1.312
6502-20-20-FG	1-1/4	1-5/8-12	1-5/8-12	1.078	1.078	1.59	1.39	2.03	2.000	1.625
6502-24-24-FG	1-1/2	1-7/8-12	1-7/8-12	1.312	1.312	1.78	1.53	2.25	2.250	1.875
6502-32-32-FG	2	2-1/2-12	2-1/2-12	1.781	1.781	2.22	1.96	2.91	2.875	2.500

FP-FJS 90°
6503 Series

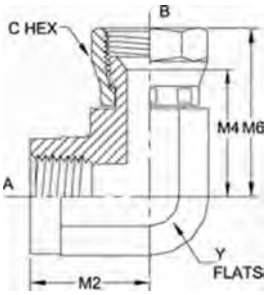

PART NO.SIZE	TUBE O.D.	A NPTF	B SAE 37	B DRILL	M2 LGTH	M4 LGTH	M6 LGTH	C HEX	Y FLATS
6503-04-04-FG	1/4	1/4-18	7/16-20	0.172	0.88	0.83	1.18	0.563	0.750
6503-04-05-FG	5/16	1/4-18	1/2-20	0.234	0.88	0.87	1.25	0.625	0.750
6503-04-06-FG	3/8	1/4-18	9/16-18	0.297	0.88	0.91	1.29	0.688	0.750
6503-06-06-FG	3/8	3/8-18	9/16-18	0.297	1.02	1.04	1.42	0.688	0.875
6503-06-08-FG	1/2	3/8-18	3/4-16	0.391	1.02	1.09	1.52	0.875	0.875
6503-08-08-FG	1/2	1/2-14	3/4-16	0.391	1.23	1.12	1.55	0.875	1.062
6503-08-10-FG	5/8	1/2-14	7/8-14	0.484	1.23	1.16	1.66	1.000	1.062
6503-12-12-FG	3/4	3/4-14	1-1/16-12	0.609	1.36	1.34	1.91	1.250	1.312

MJ-FJS Straight
6504 Series

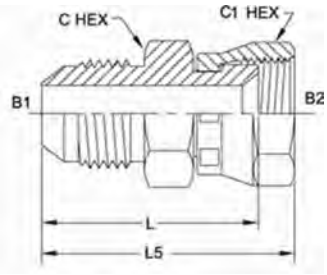

PART NO. SIZE	TUBE O.D.	B1 SAE 37	B2 SAE 37	B1 DRILL	B2 DRILL	L LGTH	L5 LGTH	CI HEX	C HEX
6504-04-04	1/4	7/16-20	7/16-20	0.172	0.172	1.16	1.51	0.563	0.500
6504-05-05	5/16	1/2-20	1/2-20	0.234	0.234	1.19	1.57	0.625	0.562
6504-06-06	3/8	9/16-18	9/16-18	0.297	0.297	1.27	1.65	0.688	0.625
6504-06-08	1/2	9/16-18	3/4-16	0.297	0.391	1.32	1.97	0.875	0.812
6504-08-08	1/2	3/4-16	3/4-16	0.391	0.391	1.42	1.85	0.875	0.812
6504-08-10	5/8	3/4-16	7/8-14	0.391	0.484	1.45	1.95	1.000	0.938
6504-10-10	5/8	7/8-14	7/8-14	0.484	0.484	1.61	2.11	1.000	0.938
6504-12-12	3/4	1-1/16-12	1-1/16-12	0.609	0.609	1.82	2.39	1.250	1.125
6504-16-16	1	1-5/16-12	1-5/16-12	0.844	0.844	1.93	2.53	1.500	1.375
6504-20-16	1-1/4	1-5/8-12	1-5/16-12	1.078	0.844	2.04	2.64	1.500	1.688
6504-20-20	1-1/4	1-5/8-12	1-5/8-12	1.078	1.078	2.10	2.82	2.000	1.688
6504-24-24	1-1/2	1-7/8-12	1-7/8-12	1.312	1.312	2.37	3.32	2.250	2.000

MP-FJS Straight
6505 Series

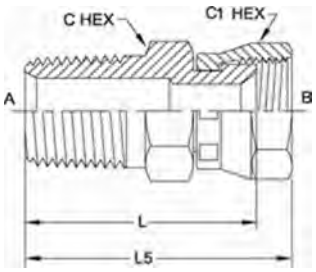

PART NO. SIZE	TUBE O.D.	A NPTF	B SAE 37	A DRILL	B DRILL	L LGTH	L5 LGTH	CI HEX	C HEX
6505-02-04	1/4	1/8-27	7/16-20	0.188	0.172	0.99	1.34	0.563	0.500
6505-02-05	5/16	1/8-27	1/2-20	0.188	0.234	1.03	1.41	0.625	0.562
6505-04-04	1/4	1/4-18	7/16-20	0.281	0.172	1.20	1.55	0.563	0.562
6505-04-05	5/16	1/4-18	1/2-20	0.281	0.234	1.26	1.64	0.625	0.562
6505-04-06	3/8	1/4-18	9/16-18	0.281	0.297	1.30	1.68	0.688	0.562
6505-06-04	3/8	3/8-18	7/16-20	0.406	0.172	1.23	1.58	0.563	0.750
6505-06-06	3/8	3/8-18	9/16-18	0.406	0.297	1.26	1.64	0.688	0.750
6505-06-08	1/2	3/8-18	3/4-16	0.406	0.391	1.31	1.74	0.875	0.875
6505-06-10	5/8	3/8-18	7/8-14	0.406	0.484	1.41	1.91	1.000	0.875
6505-08-06	3/8	1/2-14	9/16-18	0.531	0.297	1.51	1.89	0.688	0.875
6505-08-08	1/2	1/2-14	3/4-16	0.531	0.391	1.56	1.99	0.875	0.875
6505-08-10	5/8	1/2-14	7/8-14	0.531	0.484	1.60	2.10	1.000	1.000
6505-08-12	3/4	1/2-14	1-1/16-12	0.531	0.609	1.58	2.15	1.250	1.000
6505-12-08	1/2	3/4-14	3/4-16	0.719	0.391	1.67	2.10	0.875	1.125
6505-12-10	5/8	3/4-14	7/8-14	0.719	0.484	1.70	2.20	1.000	1.125
6505-12-12	3/4	3/4-14	1-1/16-12	0.719	0.609	1.72	2.29	1.250	1.125
6505-12-14	7/8	3/4-14	1-3/16-12	0.719	0.719	1.74	2.32	1.375	1.250
6505-12-16	1	3/4-14	1-5/16-12	0.719	0.844	1.77	2.37	1.500	1.375
6505-16-16	1	1-11-1/2	1-5/16-12	0.938	0.844	1.97	2.57	1.500	1.375
6505-20-20	1-1/4	1-1/4-11-1/2	1-5/8-12	1.25	1.078	2.21	2.85	2.000	1.688
6505-24-24	1-1/2	1-1/2-11-1/2	1-7/8-12	1.5	1.312	2.27	2.99	2.250	2.000
6505-32-32	2	2-11-1/2	2-1/2-12	1.938	1.781	2.50	3.45	2.875	2.625

FP-FJS Straight
6506 Series

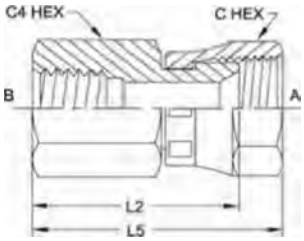

PART NO. SIZE	TUBE O.D.	B NPTF	A SAE37	A DRILL	L2 LDTH	LS LGTH	C HEX	C4 HEX
6506-02-04	1/4	1/8-27	7/16-20	0.172	0.98	1.33	0.563	0.562
6506-04-02	1/8	1/4-18	5/16-24	0.062	1.20	1.51	0.438	0.750
6506-04-04	1/4	1/4-18	7/16-20	0.172	1.17	1.52	0.563	0.750
6506-04-05	5/16	1/4-18	1/2-20	0.234	1.21	1.59	0.625	0.750
6506-04-06	3/8	1/4-18	9/16-18	0.297	1.26	1.64	0.688	0.750
6506-06-04	1/4	3/8-18	7/16-20	0.172	1.24	1.59	0.563	0.875
6506-06-06	3/8	3/8-18	9/16-18	0.297	1.32	1.70	0.688	0.875
6506-06-08	1/2	3/8-18	3/4-16	0.391	1.37	1.80	0.875	0.875
6506-06-10	5/8	3/8-18	7/8-14	0.484	1.40	1.90	1.000	0.938
6506-08-06	3/8	1/2-14	9/16-18	0.297	1.54	1.92	0.688	1.125
6506-08-08	1/2	1/2-14	3/4-16	0.391	1.59	2.02	0.875	1.125
6506-08-10	5/8	1/2-14	7/8-14	0.484	1.62	2.12	1.000	1.125
6506-08-12	3/4	1/2-14	1-1/16-12	0.609	1.66	2.23	1.250	1.125
6506-12-10	5/8	3/4-14	7/8-14	0.484	1.68	2.18	1.000	1.375
6506-12-12	3/4	3/4-14	1-1/16-12	0.609	1.72	2.29	1.250	1.375
6506-12-14	7/8	3/4-14	1-3/16-12	0.719	1.75	2.33	1.375	1.375
6506-12-16	1	3/4-14	1-5/16-12	0.844	1.78	2.38	1.500	1.375
6506-16-16	1	1-11-1/2	1-5/16-12	0.844	2.03	2.63	1.500	1.625
6506-20-20	1-1/4	1-1/4-11-1/2	1-5/8-12	1.078	2.20	2.84	2.000	2.000
6506-24-24	1-1/2	1-1/2-11-1/2	1-7/8-12	1.312	2.27	2.99	2.250	2.375
6506-32-32	2	2-11-1/2	2-1/2-12	1.781	2.37	3.32	2.875	2.875

JIC-FJS-FORB Tee
6564 Series

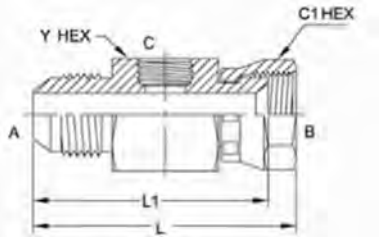

PART NO. SIZE	TUBE O.D.	A JIC	B FJS	C FORB	A ORILL	B DRILL	LI LGTH	L LGTH	CI HEX	Y HEX
6564-04-04-04	1/4	7/16-20	7/16-20	7/16-20	0.172	0.172	1.48	1.83	0.563	1.062
6564-06-06-04	3/8	9/16-18	9/16-18	7/16-20	0.297	0.297	1.57	1.95	0.688	1.062
6564-08-08-04	1/2	3/4-16	3/4-16	7/16-20	0.391	0.391	1.75	2.18	0.875	1.062
6564-10-10-04	5/8	7/8-14	7/8-14	7/16-20	0.484	0.484	1.90	2.40	1.000	1.125
6564-12-12-04	3/4	1-1/16-12	1-1/16-12	7/16-20	0.609	0.609	2.02	2.59	1.250	1.250
6564-16-16-04	1	1-5/16-12	1-5/16-12	7/16-20	0.844	0.844	2.25	2.85	1.500	1.500
6564-20-20-04	1-1/4	1-5/8-12	1-5/8-12	7/16-20	1.078	1.078	2.43	3.07	2.000	1.750
6564-24-24-04	1-1/2	1-7/8-12	1-7/8-12	7/16-20	1.312	1.312	2.50	3.22	2.250	2.125

FJS-FJS Straight
6565 Series

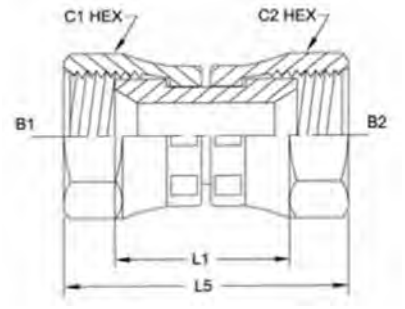

PART NO.SIZE	TUBE O.D.	B1 SAE37	B2 SAE37	B1 DRILL	B2 DRILL	LI LGTH	L5 LGTH	CI HEX	C2 HEX
6565-04-04	1/4	7/16-20	7/16-20	0.172	0.172	0.69	1.39	0.563	0.563
6565-06-06	3/8	9/16-18	9/16-18	0.297	0.297	0.84	1.60	0.688	0.688
6565-08-08	1/2	3/4-16	3/4-16	0.391	0.391	0.94	1.80	0.875	0.875
6565-10-10	5/8	7/8-14	7/8-14	0.484	0.484	1.00	2.00	1.000	1.000
6565-12-08	3/4	1-1/16-12	3/4-16	0.609	0.391	1.00	1.93	1.250	0.875
6565-12-12	3/4	1-1/16-12	1-1/16-12	0.609	0.609	1.07	2.21	1.250	1.250
6565-16-16	1	1-5/16-12	1-5/16-12	0.844	0.844	1.19	2.39	1.500	1.500
6565-20-20	1-1/4	1-5/8-12	1-5/8-12	1.078	1.078	1.28	2.56	2.000	2.000
6565-24-24	1-1/2	1-7/8-12	1-7/8-12	1.312	1.312	1.42	2.86	2.250	2.250

MJ-FJS-FP Tee
6574 Series

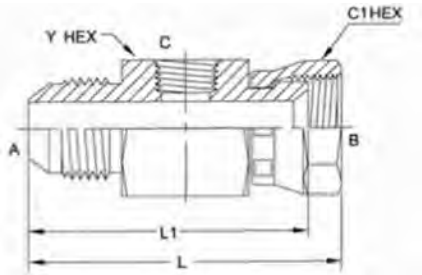

PART NO.SIZE	TUBE O.D.	A SAE37	B SAE37	C NPTF	A DRILL	B DRILL	11 LGTH	L LGTH	CI HEX	Y HEX
6574-04-04-04	1/4	7/16-20	7/16-20	1/4-18	0.172	0.172	1.70	2.05	0.563	1.250
6574-06-06-04	3/8	9/16-18	9/16-18	1/4-18	0.297	0.297	1.78	2.16	0.688	1.250
6574-08-08-04	1/2	3/4-16	3/4-16	1/4-18	0.391	0.391	1.93	2.36	0.875	1.250
6574-10-10-04	5/8	7/8-14	7/8-14	1/4-18	0.484	0.484	2.07	2.57	1.000	1.250
6574-12-12-04	3/4	1-1/16-12	1-1/16-12	1/4-18	0.609	0.609	2.20	2.77	1.250	1.250
6574-16-16-04	1	1-5/16-12	1-5/16-12	1/4-18	0.844	0.844	2.31	2.91	1.500	1.500
6574-20-20-04	1-1/4	1-5/8-12	1-5/8-12	1/4-18	1.078	1.078	2.39	3.03	2.000	1.750
6574-24-24-04	1-1/2	1-7/8-12	1-7/8-12	1/4-18	1.312	1.312	2.62	3.34	2.250	2.125

MJ-MJ-FJS Tee
6600 Series

SAE# 070433 / MS# 51524

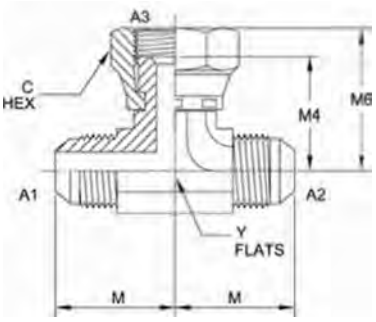

PART NO.SIZE	TUBE O.D.	fll SAE37	A2 SAE37	A3 SAE37	A1 DRILL	A2 DRILL	A3 DRILL	M LGTH	M4 LGTH	M6 LGTH	C HEX	Y FLATS
6600-02-02-02-FG	1/8	5/16-24	5/16-24	5/16-24	0.062	0.062	0.062	0.77	0.66	0.97	0.438	0.438
6600-03-03-03-FG	3/16	3/8-24	3/8-24	3/8-24	0.125	0.125	0.125	0.83	0.67	1.00	0.500	0.438
6600-04-04-04-FG	1/4	7/16-20	7/16-20	7/16-20	0.172	0.172	0.172	0.89	0.65	1.00	0.563	0.438
6600-05-05-05-FG	5/16	1/2-20	1/2-20	1/2-20	0.234	0.234	0.234	0.95	0.68	1.06	0.625	0.562
6600-06-06-06-FG	3/8	9/16-18	9/16-18	9/16-18	0.297	0.297	0.297	1.06	0.87	1.25	0.688	0.562
6600-06-06-08-FG	3/8	9/16-18	9/16-18	3/4-16	0.297	0.297	0.391	1.14	0.95	1.38	0.875	0.750
6600-08-08-08-FG	1/2	3/4-16	3/4-16	3/4-16	0.391	0.391	0.391	1.25	0.95	1.38	0.875	0.750
6600-10-10-10-FG	5/8	7/8-14	7/8-14	7/8-14	0.484	0.484	0.484	1.45	1.12	1.62	1.000	0.875
6600-12-12-10-FG	3/4	1-1/16-12	1-1/16-12	7/8-14	0.609	0.609	0.484	1.66	1.16	1.66	1.000	1.062
6600-12-12-12-FG	3/4	1-1/16-12	1-1/16-12	1-1/16-12	0.609	0.609	0.609	1.66	1.18	1.75	1.250	1.062
6600-14-14-14-FG	7/8	1-3/16-12	1-3/16-12	1-3/16-12	0.719	0.719	0.719	1.80	1.20	1.78	1.375	1.312
6600-16-16-16-FG	1	1-5/16-12	1-5/16-12	1-5/16-12	0.844	0.844	0.844	1.81	1.40	2.00	1.500	1.312
6600-20-20-20-FG	1-1/4	1-5/8-12	1-5/8-12	1-5/8-12	1.078	1.078	1.078	2.06	1.67	2.31	2.000	1.625
6600-24-24-24-FG	1-1/2	1-7/8-12	1-7/8-12	1-7/8-12	1.312	1.312	1.312	2.33	1.87	2.59	2.250	1.875
6600-32-32-32-FG	2	2-1/2-12	2-1/2-12	2-1/2-12	1.781	1.781	1.781	3.06	2.43	3.38	2.875	2.500

MJ-FJS-MJ Tee
6602 Series

SAE# 070432 / MS# 51523

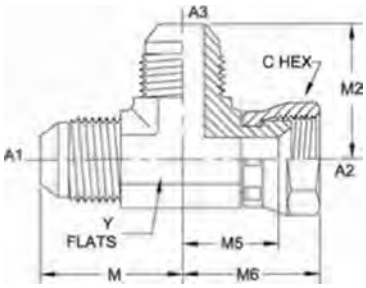

PART NOSIZE	A1TUBE O.D.	A2 TUBE 0.0.	A1 SAE 37	A2 SAE 37	A3 SAE 37	A1 DRILL	A2 DRILL	A3 DRILL	M LETH	M5 LGTH	MG LGTH	M2 LGTH	C HEX	Y HEX
6602-03-03-03-FG	3/16	3/16	3/8-24	3/8-24	3/8-24	0.125	0.125	0.125	0.83	0.67	1.00	0.83	0.500	0.438
6602-04-04-04-FG	1/4	1/4	7/16-20	7/16-20	7/16-20	0.172	0.172	0.172	0.89	0.65	1.00	0.89	0.563	0.438
6602-04-06-06-FG	1/4	3/8	7/16-20	9/16-18	9/16-18	0.172	0.297	0.297	1.05	0.87	1.25	1.06	0.688	0.562
6602-04-10-10-FG	1/4	5/8	7/16-20	7/8-14	7/8-14	0.172	0.484	0.484	1.21	1.12	1.62	1.45	1.000	0.875
6602-04-12-12-FG	1/4	3/4	7/16-20	1-1/16-12	1-1/16-12	0.172	0.609	0.609	1.30	1.18	1.75	1.66	1.250	1.062
6602-05-05-04-FG	5/16	1/4	1/2-20	1/2-20	7/16-20	0.234	0.234	0.172	0.95	0.68	1.06	0.95	0.625	0.562
6602-05-05-05-FG	5/16	5/16	1/2-20	1/2-20	1/2-20	0.234	0.234	0.234	0.95	0.68	1.06	0.95	0.625	0.562
6602-06-06-06-FG	3/8	3/8	9/16-18	9/16-18	9/16-18	0.297	0.297	0.297	1.06	0.87	1.25	1.06	0.688	0.562
6602-06-06-04-FG	3/8	1/4	9/16-18	9/16-18	7/16-20	0.297	0.297	0.172	1.06	0.87	1.25	1.05	0.688	0.562
6602-06-08-06-FG	3/8	1/2	9/16-18	3/4-16	9/16-18	0.297	0.391	0.297	1.14	0.95	1.38	1.14	0.875	0.750
6602-06-08-08-FG	3/8	1/2	9/16-18	3/4-16	3/4-16	0.297	0.391	0.391	1.14	0.95	1.38	1.25	0.875	0.750
6602-08-08-04-FG	1/2	1/4	3/4-16	3/4-16	7/16-20	0.391	0.391	0.172	1.25	0.95	1.38	1.25	0.875	0.750
6602-08-08-05-FG	1/2	5/16	3/4-16	3/4-16	1/2-20	0.391	0.391	0.234	1.25	0.95	1.38	1.12	0.875	0.750
6602-08-08-06-FG	1/2	3/8	3/4-16	3/4-16	9/16-18	0.391	0.391	0.297	1.25	0.95	1.38	1.14	0.875	0.750
6602-08-08-08-FG	1/2	1/2	3/4-16	3/4-16	3/4-16	0.391	0.391	0.391	1.25	0.95	1.38	1.25	0.875	0.750
6602-08-08-12-FG	1/2	3/4	3/4-16	3/4-16	1-1/16-12	0.391	0.391	0.609	1.42	1.12	1.55	1.42	0.875	1.062
6602-08-12-12-FG	1/2	3/4	3/4-16	1-1/16-12	1-1/16-12	0.391	0.609	0.609	1.42	1.18	1.75	1.66	1.250	1.062
6602-08-20-20-FG	1/2	1-1/4	3/4-16	1-5/8-12	1-5/8-12	0.391	1.078	1.078	1.72	1.67	2.31	2.06	2.000	1.625
6602-10-10-10-FG	5/8	5/8	7/8-14	7/8-14	7/8-14	0.484	0.484	0.484	1.45	1.12	1.62	1.45	1.000	0.875
6602-10-10-12-FG	5/8	3/4	7/8-14	7/8-14	1-1/16-12	0.484	0.484	0.609	1.33	1.16	1.66	1.33	1.000	1.062
6602-12-12-04-FG	3/4	1/4	1-1/16-12	1-1/16-12	7/16-20	0.609	0.609	0.172	1.66	1.18	1.75	1.66	1.250	1.062
6602-12-12-12-FG	3/4	3/4	1-1/16-12	1-1/16-12	1-1/16-12	0.609	0.609	0.609	1.66	1.18	1.75	1.66	1.250	1.062
6602-14-14-14-FG	7/8	7/8	1-3/16-12	1-3/16-12	1-3/16-12	0.719	0.719	0.719	1.80	1.20	1.78	1.80	1.375	1.312
6602-16-16-10-FG	1	5/8	1-5/16-12	1-5/16-12	7/8-14	0.844	0.844	0.484	1.81	1.40	2.00	1.81	1.500	1.312
6602-16-16-12-FG	1	3/4	1-5/16-12	1-5/16-12	1-1/16-12	0.844	0.844	0.609	1.81	1.40	2.00	1.81	1.500	1.312
6602-16-16-16-FG	1	1	1-5/16-12	1-5/16-12	1-5/16-12	0.844	0.844	0.844	1.81	1.40	2.00	1.81	1.500	1.312
6602-16-20-20-FG	1	1-1/4	1-5/16-12	1-5/8-12	1-5/8-12	0.844	1.078	1.078	2.01	1.67	2.31	2.06	2.000	1.625
6602-20-20-20-FG	1-1/4	1-1/4	1-5/8-12	1-5/8-12	1-5/8-12	1.078	1.078	1.078	2.06	1.67	2.31	2.06	2.000	1.625
6602-24-24-24-FG	1-1/2	1-1/2	1-7/8-12	1-7/8-12	1-7/8-12	1.312	1.312	1.312	2.33	1.87	2.59	2.33	2.250	1.875
6602-32-32-32-FG	2	2	2-1/2-12	2-1/2-12	2-1/2-12	1.781	1.781	1.781	3.06	2.43	3.38	3.06	2.875	2.500

FJS-FJS-MJ Tee
6603 Series

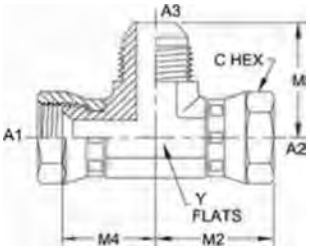

PART NO.SIZE	TUBE O.D.	A1 SAE37	A2 SAE37	A3 SAE37	A1 DRILL	A2 DRILL	A3 DRILL	M4 LGTH	M2 LGTH	M LGTH	C HEX	Y FLATS
6603-04-04-04-FG	1/4	7/16-20	7/16-20	7/16-20	0.172	0.172	0.172	0.65	1.00	0.89	0.563	0.438
6603-06-06-06-FG	3/8	9/16-18	9/16-18	9/16-18	0.297	0.297	0.297	0.87	1.25	1.06	0.688	0.562
6603-08-08-08-FG	1/2	3/4-16	3/4-16	3/4-16	0.391	0.391	0.391	0.95	1.38	1.25	0.875	0.750
6603-10-10-10-FG	5/8	7/8-14	7/8-14	7/8-14	0.484	0.484	0.484	1.12	1.62	1.45	1.000	0.875
6603-12-12-12-FG	3/4	1-1/16-12	1-1/16-12	1-1/16-12	0.609	0.609	0.609	1.18	1.75	1.66	1.250	1.062
6603-16-16-16-FG	1	1-5/16-12	1-5/16-12	1-5/16-12	0.844	0.844	0.844	1.40	2.00	1.81	1.500	1.312

FJS-FJS-MP Tee
6604 Series

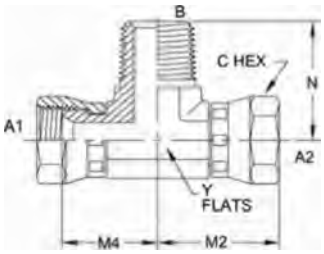

PART NO.SIZE	TUBE O.D.	A1 SAE37	A2 SAE37	B NPTF	A1 DRILL	A2 DRILL	B DRILL	M4 LGTH	M2 LGTH	N LGTH	C HEX	Y FLATS
6604-06-06-06-FG	3/8	9/16-18	9/16-18	3/8-18	0.297	0.297	0.406	0.90	1.28	1.22	0.688	0.750
6604-12-12-12-FG	3/4	1-1/16-12	1-1/16-12	3/4-14	0.609	0.609	0.719	1.18	1.75	1.59	1.250	1.062
6604-04-04-04-FG	1/4	7/16-20	7/16-20	1/4-18	0.172	0.172	0.281	0.79	1.14	1.09	0.562	0.562
6604-08-08-08-FG	1/2	3/4-16	3/4-16	1/2-14	0.391	0.391	0.531	1.08	1.51	1.47	0.875	0.875
6604-16-16-16-FG	1	1-5/16-12	1-5/16-12	1-11-1/2	0.844	0.844	0.938	1.40	2.00	1.97	1.500	1.312

FJS-FJS-FP Tee
6605 Series

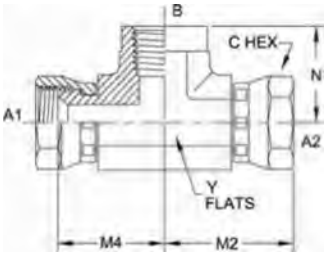

PART NO.SIZE	TUBE O.D.	A1 SAE37	A2 SAE37	B NPTF	A1 DRILL	A2 DRILL	M4 LGTH	M2 LGTH	N LGTH	C HEX	Y FLATS
6605-04-04-04-FG	1/4	7/16-20	7/16-20	1/4-18	0.172	0.172	0.83	1.18	0.88	0.563	0.750

FJS-FJS-FJS Tee
6606 Series

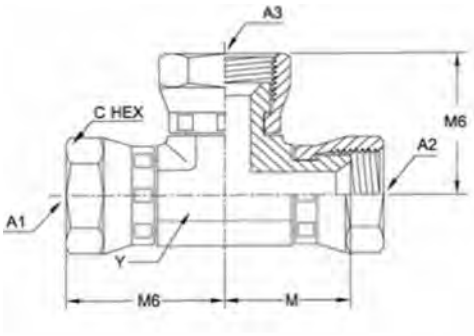

PART NO.SIZE	TUBE O.D.	AT SAE37	A2 SAE37	A3 SAE37	A1 DRILL	A2 DRILL	A3 DRILL	M LGTH	M6 LGTH	C HEX	Y FLATS
6606-04-04-04-FG	1/4	7/16-20	7/16-20	7/16-20	0.172	0.172	0.172	0.65	1.00	0.563	0.438
6606-06-06-06-FG	3/8	9/16-18	9/16-18	9/16-18	0.297	0.297	0.297	0.87	1.25	0.688	0.562
6606-08-08-08-FG	1/2	3/4-16	3/4-16	3/4-16	0.391	0.391	0.391	0.95	1.38	0.875	0.750
6606-10-10-10-FG	5/8	7/8-14	7/8-14	7/8-14	0.484	0.484	0.484	1.12	1.62	1.000	0.875
6606-12-12-12-FG	3/4	1-1/16-12	1-1/16-12	1-1/16-12	0.609	0.609	0.609	1.18	1.75	1.250	1.062
6606-16-16-16-FG	1	1-5/16-12	1-5/16-12	1-5/16-12	0.844	0.844	0.844	1.40	2.00	1.500	1.312

MJ-FJS Swept 90°
6701 Series

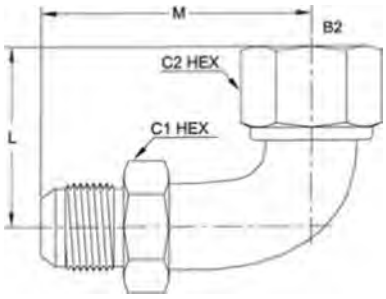

PART NO.SIZE	TUBE O.D.	B1 SAE37	B2 SAE37	M LGTH	L LGTH	CI HEX	C2 HEX
6701-04-04	1/4	7/16-20	7/16-20	1.25	1.09	0.500	0.563
6701-06-06	3/8	9/16-18	9/16-18	1.35	1.22	0.625	0.688
6701-08-08	1/2	3/4-16	3/4-16	1.77	1.52	0.812	0.875
6701-10-10	5/8	7/8-14	7/8-14	1.94	1.80	0.937	1.000
6701-12-12	3/4	1 1/16-12	1 1/16-12	2.50	2.40	1.125	1.250
6701-16-16	1	1 5/16-12	1 5/16-12	3.10	3.15	1.375	1.500
6701-20-20	1 1/4	1-5/8-12	1-5/8-12	2.75	3.15	1.688	2.000

MJ-FJS Swept 90°
6701-L Series

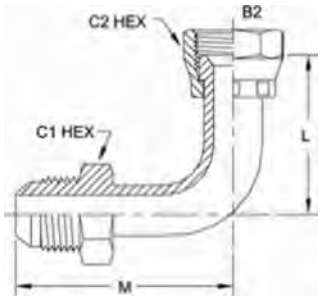

PART NO.SIZE	TUBE O.D.	B1 SAE37	B2 SAE37	I LCTH	M LGTH	CI HEX	C2 HEX
6701-L-04-04	1/4	7/16-20	7/16-20	2.73	1.58	0.500	0.563
6701-L-06-06	3/8	9/16-18	9/16-18	2.42	1.50	0.625	0.688
6701-L-08-08	1/2	3/4-16	3/4-16	2.90	1.825	0.812	0.875
6701-L-10-10	5/8	7/8-14	7/8-14	3.07	2.16	0.937	1.000
6701-L-12-12	3/4	1 1/16-12	1 1/16-12	4.22	2.80	1.125	1.250
6701-L-16-16	1	1 5/16-12	1 5/16-12	4.87	3.125	1.375	1.500
6701-L-20-20	1-1/4	1-5/8-12	1-5/8-12	5.00	3.50	1.688	2.000

MJ-FJS Swept 45°
6702 Series

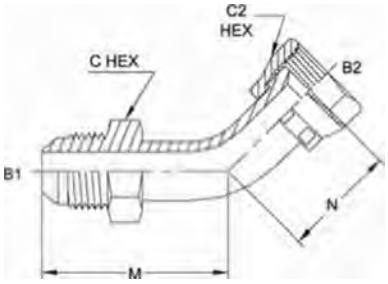

PART NO.SIZE	TUBE O.D.	B1 SAE37	B2 SAE37	M LGTH	N LGTH	C HEX	C2 HEX
6702-04-04	1/4	7/16-20	7/16-20	1.102	0.984	0.500	0.563
6702-06-06	3/8	9/16-18	9/16-18	1.378	1.063	0.625	0.688
6702-08-08	1/2	3/4-16	3/4-16	1.575	1.181	0.812	0.875
6702-10-10	5/8	7/8-14	7/8-14	1.614	1.417	0.937	1.000
6702-12-12	3/4	1-1/16-12	1-1/16-12	2.205	1.732	1.125	1.250
6702-16-16	1	1-5/16-12	1-5/16-12	2.480	2.087	1.375	1.500
6702-20-20	1-1/4	1-5/8-12	1-5/8-12	2.953	2.283	1.688	2.000

MJ-MAORB 90°
6801-NWO Series

SAE# 070220 / MS# 51527

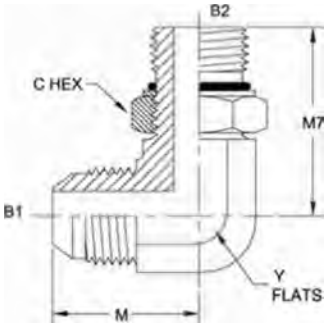

PART NO.SIZE	TUBE O.D.	B1 SAE37	B2 SAEORB	B1 DRILL	B2 DRILL	M LGTH	M7 LGTH	C HEX	Y FLATS
6801-02-02-NWO-F6	1/8	5/16-24	5/16-24	0.062	0.062	0.77	0.94	0.438	0.438
6801 -02-04-NWO-FG	1/8	5/16-24	7/16-20	0.062	0.172	0.78	1.03	0.563	0.438
6801 -03-03-NWO-FG	3/16	3/8-24	3/8-24	0.125	0.125	0.83	0.94	0.500	0.438
6801-03-04-NWO-FG	3/16	3/8-24	7/16-20	0.125	0.172	0.81	1.03	0.563	0.438
6801 -04-02-N WO-FG	1/4	7/16-20	5/16-24	0.172	0.062	0.89	0.92	0.438	0.438
6801 -04-03-NWO-FG	1/4	7/16-20	3/8-24	0.172	0.125	0.89	0.92	0.500	0.438
6801 -04-04-NWO-FG	1/4	7/16-20	7/16-20	0.172	0.172	0.89	1.03	0.563	0.438
6801 -04-05-NWO-FG	1/4	7/16-20	1/2-20	0.172	0.234	0.95	1.13	0.625	0.562
6801 -04-06-NWO-FG	1/4	7/16-20	9/16-18	0.172	0.297	1.05	1.25	0.688	0.562
6801 -04-08-NWO-FG	1/4	7/16-20	3/4-16	0.172	0.391	1.12	1.45	0.875	0.750
6801 -05-04-NWO-FG	5/16	1/2-20	7/16-20	0.234	0.172	0.95	1.13	0.563	0.562
6801-05-05-N WO-FG	5/16	1/2-20	1/2-20	0.234	0.234	0.95	1.13	0.625	0.562
6801 -05-06-NWO-FG	5/16	1/2-20	9/16-18	0.234	0.297	1.05	1.25	0.688	0.562
6801 -05-08-NWO-FG	5/16	1/2-20	3/4-16	0.234	0.391	1.12	1.45	0.875	0.750
6801-05-10-NWO-FG	5/16	1/2-20	7/8-14	0.234	0.484	1.21	1.70	1.000	0.875
6801 -06-02-NWO-FG	3/8	9/16-18	5/16-24	0.297	0.062	1.06	1.08	0.438	0.562
6801 -06-04-NWO-FG	3/8	9/16-18	7/16-20	0.297	0.172	1.06	1.19	0.563	0.562
6801 -06-05-NWO-FG	3/8	9/16-18	1/2-20	0.297	0.234	1.06	1.19	0.625	0.562
6801-06-06-N WO-FG	3/8	9/16-18	9/16-18	0.297	0.297	1.06	1.25	0.688	0.562
6801-06-08-N WO-FG	3/8	9/16-18	3/4-16	0.297	0.391	1.14	1.45	0.875	0.750
6801-06-10-NWO-FG	3/8	9/16-18	7/8-14	0.297	0.484	1.22	1.70	1.000	0.875
6801-06-12-NWO-FG	3/8	9/16-18	1-1/16-12	0.297	0.609	1.31	1.94	1.250	1.062
6801 -08-04-NWO-FG	1/2	3/4-16	7/16-20	0.391	0.172	1.25	1.26	0.563	0.750
6801 -08-05-NWO-FG	1/2	3/4-16	1/2-20	0.391	0.234	1.25	1.26	0.625	0.750
6801 -08-06-NWO-FG	1/2	3/4-16	9/16-18	0.391	0.297	1.25	1.32	0.688	0.750
6801 -08-08-NWO-FG	1/2	3/4-16	3/4-16	0.391	0.391	1.25	1.45	0.875	0.750
6801-08-10-N WO-FG	1/2	3/4-16	7/8-14	0.391	0.484	1.33	1.70	1.000	0.875
6801-08-12-NWO-FG	1/2	3/4-16	1-1/16-12	0.391	0.609	1.42	1.94	1.250	1.062
6801-08-16-N WO-FG	1/2	3/4-16	1-5/16-12	0.391	0.844	1.52	2.05	1.500	1.312
6801 -10-06-NWO-FG	5/8	7/8-14	9/16-18	0.484	0.297	1.45	1.41	0.688	0.875
6801-10-08-NWO-FG	5/8	7/8-14	3/4-16	0.484	0.391	1.45	1.54	0.875	0.875
6801-10-10-NWO-FG	5/8	7/8-14	7/8-14	0.484	0.484	1.45	1.70	1.000	0.875
6801-10-12-NWO-FG	5/8	7/8-14	1-1/16-12	0.484	0.609	1.54	1.94	1.250	1.062

Continued on next page

6801 “NWO S6N6S continued

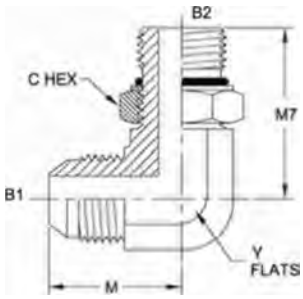

PART NO.SIZE	TUBE O.D.	B1 SAE37	B2 SAEORB	B1 DRILL	B2 DRILL	M LGTH	M7 LGTH	C HEX	Y FLATS
6801-10-14-NWO-FG	5/8	7/8-14	1-3/16-12	0.484	0.719	1.65	2.00	1.375	1.312
6801 -10-16-NWO-FG	5/8	7/8-14	1-5/16-12	0.484	0.844	1.64	2.05	1.500	1.312
6801 -10-20-NWO-FG	5/8	7/8-14	1-5/8-12	0.484	1.078	1.84	2.25	1.875	1.625
6801-12-06-NWO-FG	3/4	1-1/16-12	9/16-18	0.609	0.297	1.66	1.49	0.688	1.062
6801-12-08-NWO-FG	3/4	1-1/16-12	3/4-16	0.609	0.391	1.66	1.62	0.875	1.062
6801-12-10-NWO-FG	3/4	1-1/16-12	7/8-14	0.609	0.484	1.66	1.78	1.000	1.062
6801-12-12-N WO-FG	3/4	1-1/16-12	1-1/16-12	0.609	0.609	1.66	1.94	1.250	1.062
6801-12-14-NWO-FG	3/4	1-1/16-12	1-3/16-12	0.609	0.719	1.77	2.00	1.375	1.312
6801-12-16-NWO-FG	3/4	1-1/16-12	1-5/16-12	0.609	0.844	1.76	2.05	1.500	1.312
6801-12-20-N WO-FG	3/4	1-1/16-12	1-5/8-12	0.609	1.078	1.97	2.25	1.875	1.625
6801 -14-12-NWO-FG	7/8	1-3/16-12	1-1/16-12	0.719	0.609	1.80	2.00	1.250	1.312
6801-14-14-NWO-FG	7/8	1-3/16-12	1-3/16-12	0.719	0.719	1.80	2.00	1.375	1.312
6801-14-16-NWO-FG	7/8	1-3/16-12	1-5/16-12	0.719	0.844	1.79	2.05	1.500	1.312
6801-16-08-N WO-FG	1	1-5/16-12	3/4-16	0.844	0.391	1.81	1.73	0.875	1.312
6801-16-10-N WO-FG	1	1-5/16-12	7/8-14	0.844	0.484	1.81	1.89	1.000	1.312
6801-16-12-N WO-FG	1	1-5/16-12	1-1/16-12	0.844	0.609	1.81	2.05	1.250	1.312
6801-16-14-NWO-FG	1	1-5/16-12	1-3/16-12	0.844	0.719	1.81	2.05	1.375	1.312
6801-16-16-NWO-FG	1	1-5/16-12	1-5/16-12	0.844	0.844	1.81	2.05	1.500	1.312
6801-16-20-N WO-FG	1	1-5/16-12	1-5/8-12	0.844	1.078	2.01	2.25	1.875	1.625
6801-16-24-N WO-FG	1	1-5/16-12	1-7/8-12	0.844	1.312	2.16	2.39	2.125	1.875
6801-20-12-NWO-FG	1-1/4	1-5/8-12	1-1/16-12	1.078	0.609	2.06	2.25	1.250	1.625
6801-20-14-NWO-FG	1-1/4	1-5/8-12	1-3/16-12	1.078	0.719	2.06	2.25	1.375	1.625
6801-20-16-NWO-FG	1-1/4	1-5/8-12	1-5/16-12	1.078	0.844	2.06	2.25	1.500	1.625
6801 -20-20-NWO-FG	1-1/4	1-5/8-12	1-5/8-12	1.078	1.078	2.06	2.25	1.875	1.625
6801-20-24-NWO-FG	1-1/4	1-5/8-12	1-7/8-12	1.078	1.312	2.20	2.39	2.125	1.875
6801-24-16-NWO-FG	1-1/2	1-7/8-12	1-5/16-12	1.312	0.844	2.33	2.39	1.500	1.875
6801 -24-20-NWO-FG	1-1/2	1-7/8-12	1-5/8-12	1.312	1.078	2.33	2.39	1.875	1.875
6801 -24-24-NWO-FG	1-1/2	1-7/8-12	1-7/8-12	1.312	1.312	2.33	2.39	2.125	1.875
6801 -24-32-NWO-FG	2	1-7/8-12	2-1/2-12	1.312	1.781	2.81	2.89	2.750	2.500
6801-32-24-N WO-FG	2	2-1/2-12	1-7/8-12	1.781	1.312	3.06	2.89	2.125	2.500
6801-32-32-N WO-FG	2	2-1/2-12	2-1/2-12	1.781	1.781	3.06	2.89	2.750	2.500

MJ-MAORB 90°
6801-L-NWO Series

SAE# 071520

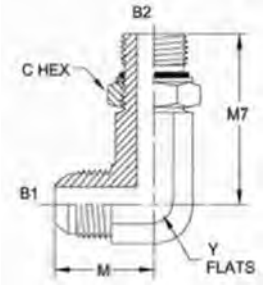

PART NO.SIZE	TUBE O.D.	B1 SAE37	B2 SAEORB	B1 DRILL	B2 DRILL	M LGTH	M7 LGTH	C HEX	Y FLATS
6801-L-04-04-NWO-FG	1/4	7/16-20	7/16-20	0.172	0.172	0.89	1.54	0.563	0.438
6801-L-04-06-NWO-FG	1/4	7/16-20	9/16-18	0.172	0.297	1.05	1.66	0.688	0.562
6801-L-06-06-NWO-FG	3/8	9/16-18	9/16-18	0.297	0.297	1.06	1.66	0.688	0.562
6801-L-06-08-NWO-FG	3/8	9/16-18	3/4-16	0.297	0.391	1.14	1.97	0.875	0.750
6801-L-08-06-NWO-FG	1/2	3/4-16	9/16-18	0.391	0.297	1.25	1.84	0.688	0.750
6801-L-08-08-NWO-FG	1/2	3/4-16	3/4-16	0.391	0.391	1.25	1.97	0.875	0.750
6801 -L-08-10-N WO-FG	1/2	3/4-16	7/8-14	0.391	0.484	1.33	2.26	1.000	0.875
6801 -L-10-08-NWO-FG	5/8	7/8-14	3/4-16	0.484	0.391	1.45	2.10	0.875	0.875
6801-L-10-10-N WO-FG	5/8	7/8-14	7/8-14	0.484	0.484	1.45	2.26	1.000	0.875
6801 -L-10-12-NWO-FG	5/8	7/8-14	1-1/16-12	0.484	0.609	1.54	2.62	1.250	1.062
6801-L-12-IO-NWO-FG	3/4	1-1/16-12	7/8-14	0.609	0.484	1.66	2.46	1.000	1.062
6801-L-12-12-NWO-FG	3/4	1-1/16-12	1-1/16-12	0.609	0.609	1.66	2.62	1.250	1.062
6801-L-16-12-NWO-FG	1	1-5/16-12	1-1/16-12	0.844	0.609	1.81	3.06	1.250	1.312
6801 -L-16-16-NWO-FG	1	1-5/16-12	1-5/16-12	0.844	0.844	1.81	3.06	1.500	1.312
6801-L-20-20-N WO-FG	1-1/4	1-5/8-12	1-5/8-12	1.078	1.078	2.06	3.48	1.875	1.625

MJ-MAORB 90°
6801-LL-NWO Series

SAE# 071620

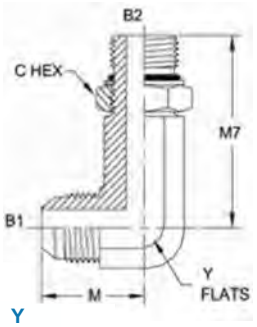

PART NO.SIZE	TUBE O.D.	B1 SAE 37	B2 SAEORB	B1 DRILL	B2 DRILL	M LGTH	M7 LGTH	C HEX	Y FLATS
6801-LL-04-04-NWO-FG	1/4	7/16-20	7/16-20	0.172	0.172	0.89	1.73	0.563	0.438
6801-LL-06-06-NWO-FG	3/8	9/16-18	9/16-18	0.297	0.297	1.06	2.08	0.688	0.562
6801-LL-06-08-NWO-FG	3/8	9/16-18	3/4-16	0.297	0.391	1.14	2.48	0.875	0.750
6801-LL-08-06-NWO-FG	1/2	3/4-16	9/16-18	0.391	0.297	1.25	2.35	0.688	0.750
6801-LL-08-08-NWO-FG	1/2	3/4-16	3/4-16	0.391	0.391	1.25	2.48	0.875	0.750
6801 -LL-08-10-NWO-FG	1/2	3/4-16	7/8-14	0.391	0.484	1.33	2.89	1.000	0.875
6801-LL-10-08-NWO-FG	5/8	7/8-14	3/4-16	0.484	0.391	1.45	2.73	0.875	0.875
6801-LL-10-10-NWO-FG	5/8	7/8-14	7/8-14	0.484	0.484	1.45	2.89	1.000	0.875
6801-LL-12-12-NWO-FG	3/4	1-1/16-12	1-1/16-12	0.609	0.609	1.66	3.34	1.250	1.062
6801-LL-12-16-NWO-FG	3/4	1-1/16-12	1-5/16-12	0.609	0.844	1.76	3.72	1.500	1.312
6801-LL-14-14-NWO-FG	7/8	1-3/16-12	1-3/16-12	0.719	0.719	1.80	3.56	1.375	1.312
6801-LL-16-12-NWO-FG	1	1-5/16-12	1-1/16-12	0.844	0.609	1.81	3.72	1.250	1.312
6801 -LL-16-16-NWO-FG	1	1-5/16-12	1-5/16-12	0.844	0.844	1.81	3.72	1.500	1.312
6801-LL-20-20-NWO-FG	1-1/4	1-5/8-12	1-5/8-12	1.078	1.078	2.06	4.41	1.875	1.625

MJ-MAORB 90°
6801-LLL-NWO Series

SAE# 071720

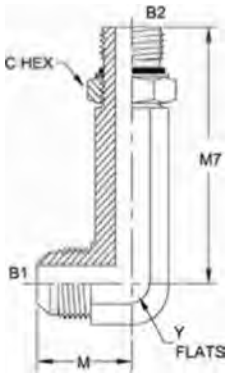

PART NO.SIZE	TUBE O.D.	B1 SAE37	B2 SAE37	B1 DRILL	B2 DRILL	M LGTH	M7 LGTH	C HEX	Y FLATS
6801-LLL-04-04-NWO-FG	1/4	7/16-20	7/16-20	0.172	0.172	0.89	2.44	0.563	0.438
6801-LLL-06-06-NWO-FG	3/8	9/16-18	9/16-18	0.297	0.297	1.06	2.91	0.688	0.562
6801-LLL-06-08-NWO-FG	3/8	9/16-18	3/4-16	0.297	0.391	1.14	3.53	0.875	0.750
6801-LLL-08-08-NWO-FG	1/2	3/4-16	3/4-16	0.391	0.391	1.25	3.53	0.875	0.750
6801-LLL-16-16-NWO-FG	1	1-5/16-12	1-5/16-12	0.844	0.844	1.81	5.39	1.500	1.312

MJ-MAORB 45°
6802-NWO Series

SAE# 070320 / MS# 51528

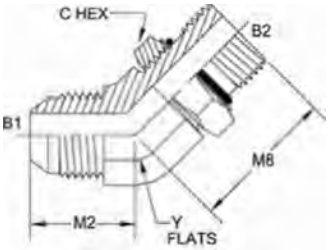

PART NO.SIZE	TUBE O.D.	B1 SAE37	B2 SAEORB	B1 DRILL	B2 DRILL	M2 LGTH	M8 LGTH	C HEX	Y FLATS
6802-02-02-NWO-FG	1/8	5/16-24	5/16-24	0.062	0.062	0.69	0.88	0.438	0.438
6802-04-04-NWO-FG	1/4	7/16-20	7/16-20	0.172	0.172	0.72	1.05	0.563	0.438
6802-04-05-NWO-FG	1/4	7/16-20	1/2-20	0.172	0.234	0.77	1.05	0.625	0.562
6802-04-06-NWO-FG	1/4	7/16-20	9/16-18	0.172	0.297	0.82	1.14	0.688	0.562
6802-04-08-NWO-FG	1/4	7/16-20	3/4-16	0.172	0.391	0.85	1.30	0.875	0.750
6802-05-04-NWO-FG	5/16	1/2-20	7/16-20	0.234	0.172	0.77	1.05	0.563	0.562
6802-05-05-NWO-FG	5/16	1/2-20	1/2-20	0.234	0.234	0.77	1.05	0.625	0.562
6802-05-06-NWO-FG	5/16	1/2-20	9/16-18	0.234	0.297	0.82	1.14	0.688	0.562
6802-06-04-NWO-FG	3/8	9/16-18	7/16-20	0.297	0.172	0.83	1.08	0.563	0.562
6802-06-05-NWO-FG	3/8	9/16-18	1/2-20	0.297	0.234	0.83	1.14	0.625	0.562
6802-06-06-NWO-FG	3/8	9/16-18	9/16-18	0.297	0.297	0.83	1.14	0.688	0.562
6802-06-08-NWO-FG	3/8	9/16-18	3/4-16	0.297	0.391	0.87	1.30	0.875	0.750
6802-06-10-NWO-FG	3/8	9/16-18	7/8-14	0.297	0.484	0.88	1.52	1.000	0.875
6802-06-12-NWO-FG	3/8	9/16-18	1-1/16-12	0.297	0.609	0.93	1.73	1.250	1.062
6802-08-04-NWO-FG	1/2	3/4-16	7/16-20	0.391	0.172	0.98	1.11	0.563	0.750
6802-08-06-NWO-FG	1/2	3/4-16	9/16-18	0.391	0.297	0.98	1.17	0.688	0.750
6802-08-08-NWO-FG	1/2	3/4-16	3/4-16	0.391	0.391	0.98	1.30	0.875	0.750
6802-08-10-NWO-FG	1/2	3/4-16	7/8-14	0.391	0.484	0.99	1.52	1.000	0.875
6802-08-12-NWO-FG	1/2	3/4-16	1-1/16-12	0.391	0.609	1.04	1.73	1.250	1.062
6802-10-08-NWO-FG	5/8	7/8-14	3/4-16	0.484	0.391	1.11	1.36	0.875	0.875
6802-10-10-NWO-FG	5/8	7/8-14	7/8-14	0.484	0.484	1.11	1.52	1.000	0.875
6802-10-12-NWO-FG	5/8	7/8-14	1-1/16-12	0.484	0.609	1.16	1.73	1.250	1.062
6802-12-08-NWO-FG	3/4	1-1/16-12	3/4-16	0.609	0.391	1.28	1.41	0.875	1.062
6802-12-10-NWO-FG	3/4	1-1/16-12	7/8-14	0.609	0.484	1.28	1.57	1.000	1.062
6802-12-12-NWO-FG	3/4	1-1/16-12	1-1/16-12	0.609	0.609	1.28	1.73	1.250	1.062
6802-12-14-NWO-FG	3/4	1-1/16-12	1-3/16-12	0.609	0.719	1.42	1.86	1.375	1.312
6802-12-16-NWO-FG	3/4	1-1/16-12	1-5/16-12	0.609	0.844	1.42	1.86	1.500	1.312
6802-14-14-NWO-FG	5/8	1-3/16-12	1-3/16-12	0.719	0.719	1.45	1.86	1.375	1.312
6802-16-12-NWO-FG	1	1-5/16-12	1-1/16-12	0.844	0.609	1.47	1.86	1.250	1.312
6802-16-14-NWO-FG	1	1-5/16-12	1-3/16-12	0.844	0.719	1.47	1.86	1.375	1.312
6802-16-16-NWO-FG	1	1-5/16-12	1-5/16-12	0.844	0.844	1.47	1.86	1.500	1.312
6802-16-20-NWO-FG	1	1-5/16-12	1-5/8-12	0.844	1.078	1.54	1.91	1.875	1.625
6802-20-16-NWO-FG	1-1/4	1-5/8-12	1-5/16-12	1.078	0.844	1.59	1.91	1.500	1.625
6802-20-20-NWO-FG	1-1/4	1-5/8-12	1-5/8-12	1.078	1.078	1.59	1.91	1.875	1.625
6802-20-24-NWO-FG	1-1/4	1-5/8-12	1-7/8-12	1.078	1.312	1.85	1.91	2.125	1.875
6802-24-20-NWO-FG	1-1/2	1-7/8-12	1-5/8-12	1.312	1.078	1.78	1.91	1.875	1.875
6802-24-24-NWO-FG	1-1/2	1-7/8-12	1-7/8-12	1.312	1.312	1.78	1.91	2.125	1.875
6802-32-32-NWO-FG	2	2-1/2-12	2-1/2-12	1.781	1.781	2.22	1.86	2.750	2.500

MJ-MJ-MAORB
Branch Tee
6803-NWO Series

SAE# 070429 / MS# 51529

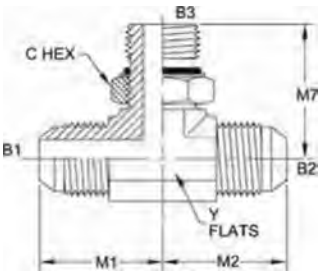

PART NO.SIZE	TUBE O.D.	B1 SAE 37	B2 SAE 37	B3 SAE ORB	B1 DRILL	B2 DRILL	B3 DRILL	MI LBTH	M2 LETH	M7 LETH	C HEX	Y FLATS
6803-02-02-02-NWO-FG	1/8	5/16-24	5/16-24	5/16-24	0.062	0.062	0.062	0.77	0.77	0.94	0.438	0.438
6803-04-04-04-NWO-FG	1/4	7/16-20	7/16-20	7/16-20	0.172	0.172	0.172	0.89	0.89	1.03	0.563	0.438
6803-04-04-06-NWO-FG	1/4	7/16-20	7/16-20	9/16-18	0.172	0.172	0.297	1.05	1.05	1.25	0.688	0.562
6803-05-05-05-NWO-FG	5/16	1/2-20	1/2-20	1/2-20	0.234	0.234	0.234	0.95	0.95	1.13	0.625	0.562
6803-06-06-04-NWO-FG	3/8	9/16-18	9/16-18	7/16-20	0.297	0.297	0.172	1.06	1.06	1.19	0.563	0.562
6803-06-06-05-NWCJ-FG	3/8	9/16-18	9/16-18	1/2-20	0.297	0.297	0.234	1.06	1.06	1.25	0.625	0.562
6803-06-06-06-NWO-FG	3/8	9/16-18	9/16-18	9/16-18	0.297	0.297	0.297	1.06	1.06	1.25	0.688	0.562
6803-06-06-08-NWO-FG	3/8	9/16-18	9/16-18	3/4-16	0.297	0.297	0.391	1.14	1.14	1.45	0.875	0.750
6803-06-06-12-NWO-FG	3/8	9/16-18	9/16-18	1-1/16-12	0.297	0.297	0.609	1.31	1.31	1.94	1.250	1.062
6803-08-08-06-NWO-FG	1/2	3/4-16	3/4-16	9/16-18	0.391	0.391	0.297	1.25	1.25	1.32	0.688	0.750
6803-08-08-08-NWO-FG	1/2	3/4-16	3/4-16	3/4-16	0.391	0.391	0.391	1.25	1.25	1.45	0.875	0.750
6803-08-08-10-NWO-FG	1/2	3/4-16	3/4-16	7/8-14	0.391	0.391	0.484	1.33	1.33	1.70	1.000	0.875
6803-08-08-12-NWO-FG	1/2	3/4-16	3/4-16	1-1/16-12	0.391	0.391	0.609	1.42	1.42	1.94	1.250	1.062
6803-10-10-08-NWO-FG	5/8	7/8-14	7/8-14	3/4-16	0.484	0.484	0.391	1.45	1.45	1.54	0.875	0.875
6803-10-10-10-NWO-FG	5/8	7/8-14	7/8-14	7/8-14	0.484	0.484	0.484	1.45	1.45	1.70	1.000	0.875
6803-10-10-12-NWO-FG	5/8	7/8-14	7/8-14	1-1/16-12	0.484	0.484	0.609	1.54	1.54	1.94	1.250	1.062
6803-10-10-16-NWO-FG	5/8	7/8-14	7/8-14	1-5/16-12	0.484	0.484	0.844	1.64	1.64	2.05	1.500	1.312
6803-12-12-08-NWO-FG	3/4	1-1/16-12	1-1/16-12	3/4-16	0.609	0.609	0.391	1.66	1.66	1.62	0.875	1.062
6803-12-12-10-NWO-FG	3/4	1-1/16-12	1-1/16-12	7/8-14	0.609	0.609	0.484	1.66	1.66	1.78	1.000	1.062
6803-12-12-12-NWO-FG	3/4	1-1/16-12	1-1/16-12	1-1/16-12	0.609	0.609	0.609	1.66	1.66	1.94	1.250	1.062
6803-12-12-16-NWO-FG	3/4	1-1/16-12	1-1/16-12	1-5/16-12	0.609	0.609	0.844	1.76	1.76	2.05	1.500	1.312
6803-14-14-14-NWO-FG	7/8	1-3/16-12	1-3/16-12	1-3/16-12	0.719	0.719	0.719	1.80	1.80	2.00	1.375	1.312
6803-16-12-16-NWO-FG	1	1-5/16-12	1-1/16-12	1-5/16-12	0.844	0.609	0.844	1.81	1.76	2.05	1.500	1.312
6803-16-16-12-NWO-FG	1	1-5/16-12	1-5/16-12	1-1/16-12	0.844	0.844	0.609	1.81	1.81	2.05	1.250	1.312
6803-16-16-16-NWO-FG	1	1-5/16-12	1-5/16-12	1-5/16-12	0.844	0.844	0.844	1.81	1.81	2.05	1.500	1.312
6803-20-20-20-NWO-FG	1-1/4	1-5/8-12	1-5/8-12	1-5/8-12	1.078	1.078	1.078	2.06	2.06	2.25	1.875	1.625
6803-24-24-24-NWO-FG	1-1/2	1-7/8-12	1-7/8-12	1-7/8-12	1.312	1.312	1.312	2.33	2.33	2.39	2.125	1.875
6803-32-32-32-NWO-FG	2	2-1/2-12	2-1/2-12	2-1/2-12	1.781	1.781	1.781	3.06	3.06	2.89	2.750	2.500

MJ-MAORB-MJ Run Tee
6804-NWO Series

SAE# 070428 / MS# 51530

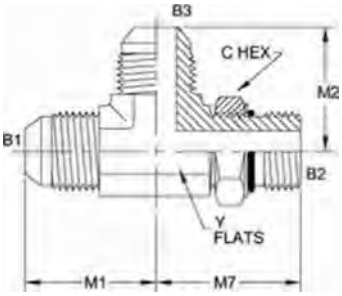

PART NO.SIZE	TUBE O.D.	B1 SAE 37	B2 SAE ORB	B3 SAE 37	B1 DRILL	B2 DRILL	B3 DRILL	MI LGTH	M7 LGTH	M2 LGTH	C HEX	Y FLATS
6804-02-02-02-NWO-FG	1/8	5/16-24	5/16-24	5/16-24	0.062	0.062	0.062	0.77	0.94	0.77	0.438	0.438
6804-02-04-02-NWO-FG	1/8	5/16-24	7/16-20	5/16-24	0.062	0.172	0.062	0.89	1.03	0.89	0.563	0.438
6804-04-04-04-NWO-FG	1/4	7/16-20	7/16-20	7/16-20	0.172	0.172	0.172	0.89	1.03	0.89	0.563	0.438
6804-04-06-04-NWO-FG	1/4	7/16-20	9/16-18	7/16-20	0.172	0.297	0.172	1.05	1.25	1.05	0.688	0.562
6804-05-04-05-NWO-FG	5/16	1/2-20	7/16-20	1/2-20	0.234	0.172	0.234	0.95	1.13	0.95	0.563	0.562
6804-05-05-05-NWO-FG	5/16	1/2-20	1/2-20	1/2-20	0.234	0.234	0.234	0.95	1.13	0.95	0.625	0.562
6804-06-04-06-NWO-FG	3/8	9/16-18	7/16-20	9/16-18	0.297	0.172	0.297	1.06	1.19	1.06	0.563	0.562
6804-06-06-04-NWO-FG	3/8	9/16-18	9/16-18	7/16-20	0.297	0.297	0.172	1.06	1.25	1.06	0.688	0.562
6804-06-06-06-NWO-FG	3/8	9/16-18	9/16-18	9/16-18	0.297	0.297	0.297	1.06	1.25	1.06	0.688	0.562
6804-06-08-06-NWO-FG	3/8	9/16-18	3/4-16	9/16-18	0.297	0.391	0.297	1.14	1.45	1.14	0.875	0.750
6804-06-08-08-NWO-FG	3/8	9/16-18	3/4-16	3/4-16	0.297	0.391	0.391	1.14	1.45	1.25	0.875	0.750
6804-08-06-04-NWO-FG	1/2	3/4-16	9/16-18	7/16-20	0.391	0.297	0.172	1.25	1.32	1.25	0.688	0.750
6804-08-06-08-NWO-FG	1/2	3/4-16	9/16-18	3/4-16	0.391	0.297	0.391	1.25	1.32	1.25	0.688	0.750
6804-08-08-04-NWO-FG	1/2	3/4-16	3/4-16	7/16-20	0.391	0.391	0.172	1.25	1.45	1.12	0.875	0.750
6804-08-08-08-NWO-FG	1/2	3/4-16	3/4-16	3/4-16	0.391	0.391	0.391	1.25	1.45	1.25	0.875	0.750
6804-08-10-08-NWO-FG	1/2	3/4-16	7/8-14	3/4-16	0.391	0.484	0.391	1.33	1.70	1.33	1.000	0.875
6804-08-12-04-NWO-FG	1/2	3/4-16	1-1/16-12	7/16-20	0.391	0.609	0.172	1.42	1.94	1.30	1.250	1.062
6804-08-12-08-NWO-FG	1/2	3/4-16	1-1/16-12	3/4-16	0.391	0.609	0.391	1.42	1.94	1.42	1.250	1.062
6804-10-08-10-NWO-FG	5/8	7/8-14	3/4-16	7/8-14	0.484	0.391	0.484	1.45	1.54	1.45	0.875	0.875
6804-10-10-10-NWO-FG	5/8	7/8-14	7/8-14	7/8-14	0.484	0.484	0.484	1.45	1.70	1.45	1.000	0.875
6804-10-12-06-NWO-FG	5/8	7/8-14	1-1/16-12	9/16-18	0.484	0.609	0.297	1.54	1.94	1.54	1.250	1.062
6804-10-12-10-NWO-FG	5/8	7/8-14	1-1/16-12	7/8-14	0.484	0.609	0.484	1.54	1.94	1.54	1.250	1.062
6804-10-16-08-NWO-FG	5/8	7/8-14	1-5/16-12	3/4-16	0.484	0.844	0.391	1.64	2.05	1.64	1.500	1.312
6804-12-08-12-N WO-FG	3/4	1-1/16-12	3/4-16	1-1/16-12	0.609	0.391	0.609	1.66	1.62	1.66	0.875	1.062
6804-12-10-12-NWO-FG	3/4	1-1/16-12	7/8-14	1-1/16-12	0.609	0.484	0.609	1.66	1.78	1.66	1.000	1.062
6804-12-12-06-NWO-FG	3/4	1-1/16-12	1-1/16-12	9/16-18	0.609	0.609	0.297	1.66	1.94	1.66	1.250	1.062
6804-12-12-08-NWO-FG	3/4	1-1/16-12	1-1/16-12	3/4-16	0.609	0.609	0.391	1.66	1.94	1.42	1.250	1.062
6804-12-12-10-N WO-FG	3/4	1-1/16-12	1-1/16-12	7/8-14	0.609	0.609	0.484	1.66	1.94	1.66	1.250	1.062
6804-12-12-12-NWO-FG	3/4	1-1/16-12	1-1/16-12	1-1/16-12	0.609	0.609	0.609	1.66	1.94	1.66	1.250	1.062
6804-12-12-16-N WO-FG	3/4	1-1/16-12	1-1/16-12	1-5/16-12	0.609	0.609	0.844	1.76	2.05	1.76	1.250	1.312
6804-12-16-12-NWO-FG	3/4	1-1/16-12	1-5/16-12	1-1/16-12	0.609	0.844	0.609	1.76	2.05	1.76	1.500	1.312
6804-14-14-14-N WO-FG	7/8	1-3/16-12	1-3/16-12	1-3/16-12	0.719	0.719	0.719	1.80	2.00	1.80	1.375	1.312
6804-16-12-16-N WO-FG	1	1-5/16-12	1-1/16-12	1-5/16-12	0.844	0.609	0.844	1.81	2.05	1.81	1.250	1.312
6804-16-16-12-N WO-FG	1	1-5/16-12	1-5/16-12	1-1/16-12	0.844	0.844	0.609	1.81	2.05	1.81	1.500	1.312
6804-16-16-16-N WO-FG	1	1-5/16-12	1-5/16-12	1-5/16-12	0.844	0.844	0.844	1.81	2.05	1.81	1.500	1.312
6804-20-20-20N WO-FG	1-1/4	1-5/8-12	1-5/8-12	1-5/8-12	1.078	1.078	1.078	2.06	2.25	2.06	1.875	1.625
6804-24-24-24-N WO-FG	1-1/2	1-7/8-12	1-7/8-12	1-7/8-12	1.312	1.312	1.312	2.33	2.39	2.33	2.125	1.875
6804-32-32-32-N WO-FG	2	2-1/2-12	2-1/2-12	2-1/2-12	1.781	1.781	1.781	3.06	2.89	3.06	2.750	2.500

MJ-MAORB-MJ Run Tee
6804-L-NWO Series

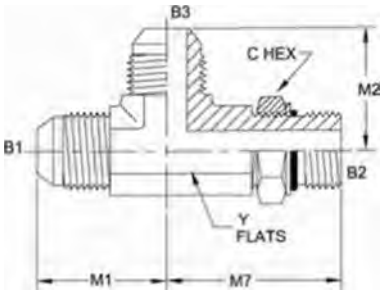

PART NO. SIZE	TUBE O.D.	B1 SAE37	B2 SAE ORB	B3 SAE 37	B1 ORILL	82 BRILL	B3 ORILL	MI LGTH	M7 LGTH	M2 LGTH	C HEX	Y FLATS
6804-L-08-08-08-NWO-FG	1/2	3/4-16	3/4-16	3/4-16	0.391	0.391	0.391	1.25	2.59	1.25	0.875	0.750
6804-L-10-O8-O8-NWO-FG	5/8	7/8-14	3/4-16	3/4-16	0.484	0.391	0.391	1.45	2.59	1.33	0.875	0.875

MAORB-FP 90°
6805-NWO Series

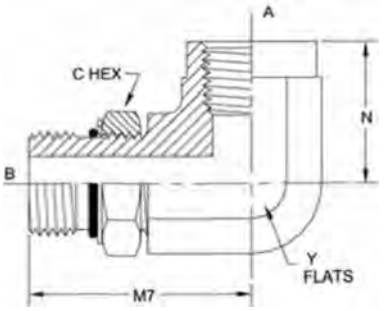

PART NO. SIZE	TUBE 0.0.	B THRAO	A NPTF	B DRILL	M7 LGTH	N LGTH	C HEX	Y FLATS
6805-04-02-NWO-FG	1/4	7/16-20	1/8-27	0.172	1.19	0.66	0.563	0.562
6805-04-04-NWO-FG	1/4	7/16-20	1/4-18	0.172	1.26	0.88	0.563	0.750
6805-05-02-NWO-FG	5/16	1/2-20	1/8-27	0.234	1.13	0.66	0.625	0.562
6805-06-04-NWO-FG	3/8	9/16-18	1/4-18	0.297	1.32	0.88	0.688	0.750
6805-06-06-NWO-FG	3/8	9/16-18	3/8-18	0.297	1.41	1.02	0.688	0.875
6805-08-06-NWO-FG	1/2	3/4-16	3/8-18	0.391	1.54	1.02	0.875	0.875
6805-08-08-NWO-FG	1/2	3/4-16	1/2-14	0.391	1.62	1.23	0.875	1.062
6805-10-06-NWO-FG	5/8	7/8-14	3/8-18	0.484	1.70	1.02	1.000	0.875
6805-10-08-NWO-FG	5/8	7/8-14	1/2-14	0.484	1.78	1.23	1.000	1.062
6805-12-08-NWO-FG	3/4	1-1/16-12	1/2-14	0.609	1.94	1.23	1.250	1.062
6805-12-12-NWO-FG	3/4	1-1/16-12	3/4-14	0.609	2.05	1.36	1.250	1.312
6805-12-16-NWO-FG	3/4	1-1/16-12	1-11-1/2	0.609	2.25	1.62	1.250	1.625
6805-14-12-NWO-FG	7/8	1-3/16-12	3/4-14	0.719	2.00	1.36	1.375	1.312
6805-16-12-NWO-FG	1	1-5/16-12	3/4-14	0.844	2.05	1.36	1.500	1.312
6805-16-16-NWO-FG	1	1-5/16-12	1-11-1/2	0.844	2.25	1.62	1.500	1.625
6805-20-20-NWO-FG	1-1/4	1-5/8-12	1-1/4-11-1/2	1.078	2.39	1.70	1.875	1.875
6805-24-20-NWO-FG	1-1/2	1-7/8-12	1-1/4-11-1/2	1.312	2.39	1.70	2.125	1.875
6805-24-24-NWO-FG	1-1/2	1-7/8-12	1-1/2-11-1/2	1.312	2.89	2.08	2.125	2.562
6805-32-32-NWO-FG	2	2-1/2-12	2-11-1/2	1.781	3.02	2.39	2.750	2.812

MAORB-FP 90° Long
6805-L-NWO Series

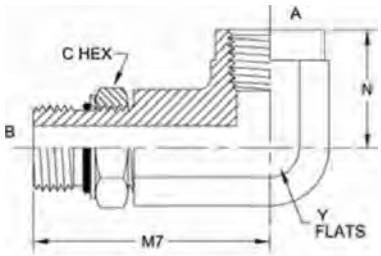

PART NO. SIZE	TUBE 0.0.	B SAE ORB	A NPTF	B DRILL	M7 LOTH	N LOTH	C HEX	Y FLATS
6805-L-08-06-NWO-FG	1/2	3/4-16	3/8-18	0.391	2.93	1.02	0.875	0.875
6805-L-10-08-NWO-FG	5/8	7/8-14	1/2-14	0.484	3.53	1.23	1.000	1.062
6805-L-12-12-N WO-FG	3/4	1-1/16-12	3/4-14	0.609	4.05	1.36	1.250	1.312
6805-L-16-16-N WO-FG	1	1-5/16-12	1-11-1/2	0.844	4.62	1.62	1.500	1.625

MAORB-MP 90°
6806-NWO Series

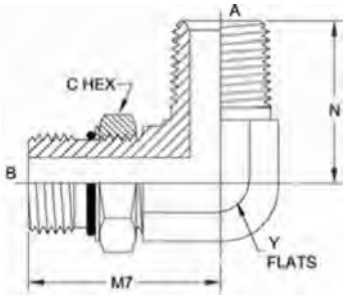

PART NO. SIZE	TUBE 0.0.	B SAE ORB	A NPTF	B DRILL	A DRILL	M7 LGTH	N LGTH	C HEX	Y FLATS
6806-04-02-N WO-FG	1/4	7/16-20	1/8-27	0.172	0.188	1.03	0.72	0.563	0.438
6806-04-04-N WO-FG	1/4	7/16-20	1/4-18	0.172	0.281	1.19	1.09	0.563	0.562
6806-05-02-NWO-FG	5/16	1/2-20	1/8-27	0.234	0.188	1.13	0.78	0.625	0.562
6806-06-04-N WO-FG	3/8	9/16-18	1/4-18	0.297	0.281	1.25	1.09	0.688	0.562
6806-06-06-NWO-FG	3/8	9/16-18	3/8-18	0.297	0.406	1.32	1.22	0.688	0.750
6806-08-06-N WO-FG	1/2	3/4-16	3/8-18	0.391	0.406	1.45	1.22	0.875	0.750
6806-08-08-NWO-FG	1/2	3/4-16	1/2-14	0.391	0.531	1.54	1.47	0.875	0.875
6806-10-08-N WO-FG	5/8	7/8-14	1/2-14	0.484	0.531	1.70	1.47	1.000	0.875
6806-12-12-NWO-FG	3/4	1-1/16-12	3/4-14	0.609	0.719	1.94	1.59	1.250	1.062
6806-12-16-N WO-FG	3/4	1-1/16-12	1-11-1/2	0.609	0.938	2.05	1.97	1.250	1.312
6806-14-12-NWO-FG	7/8	1-3/16-12	3/4-14	0.719	0.719	2.00	1.69	1.375	1.312
6806-16-12-NWO-FG	1	1-5/16-12	3/4-14	0.844	0.719	2.05	1.78	1.500	1.312
6806-16-16-NWO-FG	1	1-5/16-12	1-11-1/2	0.844	0.938	2.05	1.97	1.500	1.312
6806-20-20-N WO-FG	1-1/4	1-5/8-12	1-1/4-11-1/2	1.078	1.250	2.25	2.38	1.875	1.625
6806-20-24-N WO-FG	1-1/4	1-5/8-12	1-1/2-11-1/2	1.078	1.500	2.39	2.64	1.875	1.875
6806-24-24-N WO-FG	1-1/2	1-7/8-12	1-1/2-11-1/2	1.312	1.500	2.39	2.64	2.125	1.875
6806-32-32-NWO-FG	2	2-1/2-12	2-11-1/2	1.781	1.938	2.89	3.00	2.750	2.500

Tube Fittings & Adapters

MAORB-MAORB 90°
6807-NWO Series

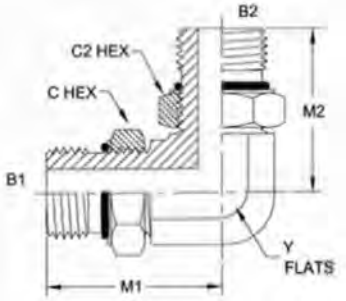

PART NO. SIZE	TUBE O.D.	B1 SAE ORB	B2 SAE ORB	B1 DRILL	B2 DRILL	MI LGTH	M2 LGTH	C HEX	C2 HEX	Y FLATS
6807-04-04-NWO-FG	1/4	7/16-20	7/16-20	0.172	0.172	1.03	1.03	0.563	0.563	0.438
6807-06-06-NWO-FG	3/8	9/16-18	9/16-18	0.297	0.297	1.25	1.25	0.688	0.688	0.562
6807-08-06-NWO-FG	1/2	3/4-16	9/16-18	0.391	0.297	1.45	1.32	0.875	0.688	0.750
6807-08-08-NWO-FG	1/2	3/4-16	3/4-16	0.391	0.391	1.45	1.45	0.875	0.875	0.750
6807-10-08-NWO-FG	5/8	7/8-14	3/4-16	0.484	0.391	1.70	1.54	1.000	0.875	0.875
6807-10-10-NWO-FG	5/8	7/8-14	7/8-14	0.484	0.484	1.70	1.70	1.000	1.000	0.875
6807-12-12-NWO-FG	3/4	1-1/16-12	1-1/16-12	0.609	0.609	1.94	1.94	1.250	1.250	1.062
6807-16-16-NWO-FG	1	1-5/16-12	1-5/16-12	0.844	0.844	2.05	2.05	1.500	1.500	1.312
6807-20-20-NWO-FG	1-1/4	1-5/8-12	1-5/8-12	1.078	1.078	2.25	2.25	1.875	1.875	1.625
6807-24-24-NWO-FG	1-1/2	1-7/8-12	1-7/8-12	1.312	1.312	2.39	2.39	2.125	2.125	1.875

MAORB-MAORB 90° X-Long
6807-LL-NWO Series

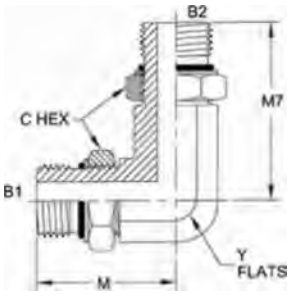

PART NO. SIZE	TUBE O.D.	B1 SAEORB	B2 SAE ORB	61 DRILL	B2 DRILL	M LGTH	M7 LGTH	C HEX	Y FLATS
6807-LL-06-06-NWO-FG	3/8	9/16-18	9/16-18	0.297	0.297	1.25	2.08	0.688	0.562

MAORB-MAORB 45°
6808-NWO Series

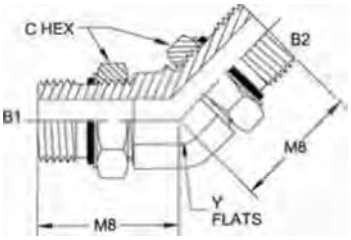

PART NO.SIZE	TUBE O.D.	B1 SAEORB	B2 SAEORB	B1 DRILL	B2 DRILL	MI LGTH	M2 LGTH	C HEX	Y FLATS
6808-04-04-NWO-FG	1/4	7/16-20	7/16-20	0.172	0.172	1.05	1.05	0.563	0.438
6808-08-08-NWO-FG	1/2	3/4-16	3/4-16	0.391	0.391	1.30	1.30	0.875	0.750
6808-16-16-NOW-FG	1	1-5/16-12	1-5/16-12	0.844	0.844	1.86	1.86	1.500	1.312

MAORB-FJS 90°
6809-NWO Series

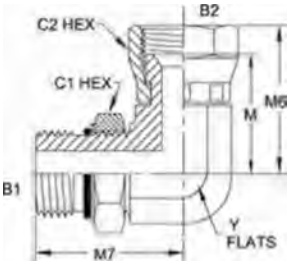

PART NO. SIZE	TUBE 0.0.	B1 SAEORB	B2 JIC37	B1 DRILL	B2 DRILL	M7 LOTH	M LGTH	M6 LGTH	01 HEX	02 HEX	Y FLATS
6809-04-04-NWO-FG	1/4	7/16-20	7/16-20	0.172	0.172	1.03	0.68	1.00	0.563	0.563	0.438
6809-04-06-NWO-FG	3/8	7/16-20	9/16-18	0.172	0.297	1.19	0.81	1.25	0.563	0.688	0.562
6809-06-04-NWO-FG	3/8	9/16-18	7/16-20	0.297	0.172	1.25	0.90	1.09	0.688	0.563	0.562
6809-06-06-NWO-FG	3/8	9/16-18	9/16-18	0.297	0.297	1.25	0.87	1.25	0.688	0.688	0.562
6809-06-08-NWO-FG	3/8	9/16-18	3/4-16	0.297	0.391	1.32	0.95	1.38	0.688	0.875	0.750
6809-08-06-NWO-FG	1/2	3/4-16	9/16-18	0.391	0.297	1.45	1.07	1.24	0.875	0.688	0.750
6809-08-08-NWO-FG	1/2	3/4-16	3/4-16	0.391	0.391	1.45	0.80	1.38	0.875	0.875	0.750
6809-08-12-NWO-FG	1/2	3/4-16	1-1/16-12	0.391	0.609	1.62	1.05	1.75	0.875	1.250	1.062
6809-10-08-NWO FG	5/8	7/8-14	3/4-16	0.484	0.391	1.70	1.05	1.48	1.000	0.875	0.875
6809-10-10-NWO-FG	5/8	7/8-14	7/8-14	0.484	0.484	1.70	1.20	1.62	1.000	1.000	0.875
6809-12-10-NWO-FG	3/4	1-1/16-12	7/8-14	0.609	0.484	1.94	1.44	1.62	1.250	1.000	1.062
6809-12-12-NWO-FG	3/4	1-1/16-12	1-1/16-12	0.609	0.609	1.94	1.37	1.75	1.250	1.250	1.062
6809-16-16-NWO-FG	1	1-5/16-12	1-5/16-12	0.844	0.844	2.05	1.45	2.00	1.500	1.500	1.312
6809-20-20-NWO-FG	1-1/4	1-5/8-12	1-5/8-12	1.078	1.078	2.25	1.61	2.31	1.875	2.000	1.625

MAORB-FJS 45°
6810-NWO Series

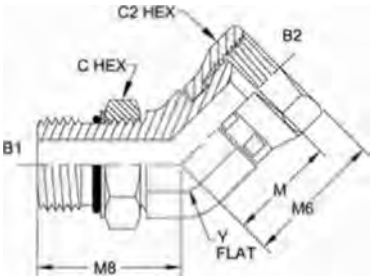

PART NO. SIZE	TUBE 0.0.	B1 THREAD	B2 THREAD	B1 DRILL	B2 DRILL	MB LGTH	M LGTH	M6 LGTH	C HEX	C2 HEX	Y FUTS
6810-04-04-NWO-FG	1/4	7/16-20	7/16-20	0.172	0.172	1.05	0.59	0.94	0.563	0.563	0.438
6810-06-06-N WO-FG	3/8	9/16-18	9/16-18	0.297	0.297	1.14	0.74	1.12	0.688	0.688	0.562
6810-08-08-NWO-FG	1/2	3/4-16	3/4-16	0.391	0.391	1.30	0.85	1.28	0.875	0.875	0.750
6810-12-12-NWO-FG	3/4	1-1/16-12	1-1/16-12	0.609	0.609	1.73	0.93	1.50	1.250	1.250	1.062

Tube Fittings & Adapters

MAORB-FORB 90°
6815-NWO Series

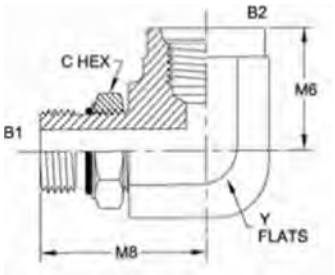

PART NO.SIZE	TUBE O.D.	B1 SAEORB	B2 SAE ORB	B1 DRILL	MB LGTH	MB LGTH	C HEX	Y FLATS
6815-04-04-NWO-FG	1/4	7/16-20	7/16-20	0.172	1.23	0.63	0.563	0.750
6815-06-06-NWO-FG	3/8	9/16-18	9/16-18	0.297	1.38	0.75	0.688	0.875
6815-08-08-NWO-FG	1/2	3/4-16	3/4-16	0.391	1.59	0.88	0.875	1.062
6815-10-10-NWO-FG	5/8	7/8-14	7/8-14	0.484	1.81	1.02	1.000	1.062
6815-12-12-NWO-FG	3/4	1-1/16-12	1-1/16-12	0.609	2.00	1.21	1.250	1.312
6815-16-16-N WO-FG	1	1-5/16-12	1-5/16-12	0.844	2.25	1.33	1.500	1.625

MAORB-FORB 45
Large Nut
6818 Series

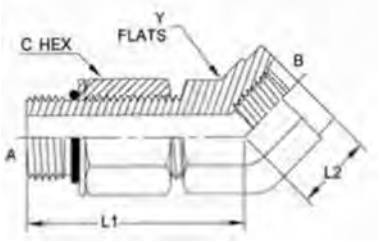

PART NO.SIZE	TUBE 0.0.	A AORB	B SAEORB	A DRILL	LI LGTH	L2 LGTH	C HEX	Y FLATS
6818-04-04-N WO-FG	1/4	7/16-20	7/16-20	0.172	1.86	0.64	0.563	0.750

FORB-MAORB-MJ Tee
6820 Series

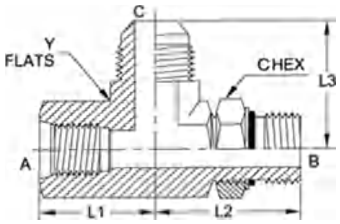

PART NO.SIZE	TUBE 0.0.	A SAEORB	B SAEORB	C JIC37	B DRILL	C DRILL	LI LGTH	L2 LGTH	13 LGTH	C HEX	Y FLATS
6820-06-06-06-N WO-FG	3/8	9/16-18	9/16-18	9/16-18	0.297	0.297	0.75	1.38	1.22	0.688	0.875
6820-06-12-12-NWO-FG	3/4	9/16-18	1-1/16-12	1-1/16-12	0.609	0.609	1.21	1.94	1.66	1.250	1.062

FORB-FORB-MAORB Tee
6832-NWO Series

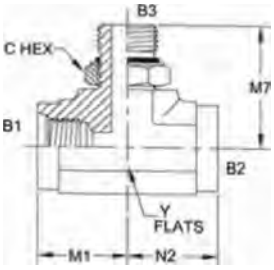

PART NO.SIZE	TUBE 0.0.	B1 SAEORB	B2 SAEORB	B3 SAEORB	B3 DRILL	MI LOTH	N2 LOTH	M7 LOTH	C HEX	Y FLATS
6832-04-04-04-NWO-FG	1/4	7/16-20	7/16-20	7/16-20	0.172	0.63	0.63	1.23	0.563	0.750
6832-06-06-06-NWO-FG	3/8	9/16-18	9/16-18	9/16-18	0.297	0.75	0.75	1.38	0.688	0.875
6832-08-05-08-NWO-FG	1/2	3/4-16	1/2-20	3/4-16	0.391	0.88	0.88	1.59	0.875	1.062
6832-08-08-08-NWO-FG	1/2	3/4-16	3/4-16	3/4-16	0.391	0.88	0.88	1.59	0.875	1.062
6832-10-10-10-NWO-FG	5/8	7/8-14	7/8-14	7/8-14	0.484	1.02	1.02	1.81	1.000	1.062
6832-12-12-12-NWO-FG	3/4	1-1/16-12	1-1/16-12	1-1/16-12	0.609	1.21	1.21	2.00	1.250	1.312
6832-16-16-16-NWO-FG	1	1-5/16-12	1-5/16-12	1-5/16-12	0.844	1.33	1.33	2.25	1.500	1.625

MAORB-FORB-FORB Tee
6835 Series

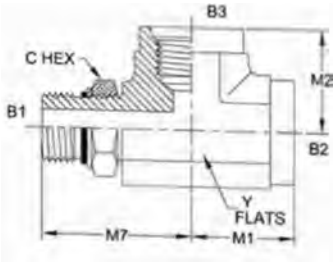

PART NO.SIZE	TUBE 0.0.	B1 SAEORB	B2 SAEORB	B3 SAE ORB	B1 DRILL	M7 LGTH	MI LOTH	M2 LOTH	C HEX	Y FLATS
6835-04-04-04-NWO-FG	1/4	7/16-20	7/16-20	7/16-20	0.172	1.23	0.63	0.63	0.563	0.750
6835-06-06-06-NWO-FG	3/8	9/16-18	9/16-18	9/16-18	0.297	1.38	0.75	0.75	0.688	0.875
6835-08-08-08-NWO-FG	1/2	3/4-16	3/4-16	3/4-16	0.391	1.59	0.88	0.88	0.875	1.062
6835-IO-IO-IO-NWO-FG	5/8	7/8-14	7/8-14	7/8-14	0.484	1.81	1.02	1.02	1.000	1.062
6835-12-12-12-NWO-FG	3/4	1-1/16-12	1-1/16-12	1-1/16-12	0.609	2.00	1.21	1.21	1.250	1.312
6835-16-16-16-NWO-FG	1	1-5/16-12	1-5/16-12	1-5/16-12	0.844	2.25	1.33	1.33	1.500	1.625

MAORB-MAORB-MJ Tee
6840-NWO Series

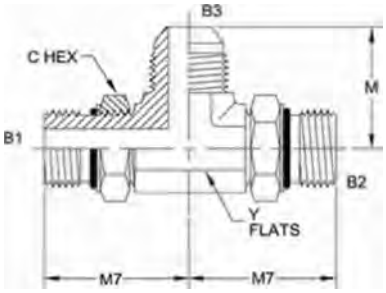

PART NO.SIZE	TUBE O.D.	B1 SAEORB	B2 SAEORB	B3 JIC37	B1 DRILL	B2 DRILL	B3 DRILL	M7 LGTH	M LGTH	C HEX	Y FLATS
6840-20-20-20-NWO-FG	1-1/4	1-5/8-12	1-5/8-12	1-5/8-12	1.078	1.078	1.078	2.25	2.06	1.875	1.625

MJ-MJ-MAORB-MJ Cross
6850-NWO Series

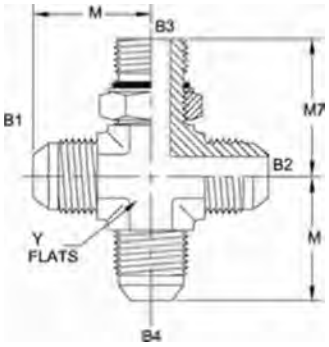

PART NO.SIZE	TUBE O.D.	B1 SAE37	B2 SAE37	B3 SAEORB	B4 SAE37	B1 DRILL	B2 DRILL	B3 DRILL	B4 DRILL	M7 LGTH	M LGTH	C HEX	Y FLATS
6850-06-06-04-06-NWO-FG	3/8	9/16-18	9/16-18	7/16-20	9/16-18	0.297	0.297	0.172	0.297	1.19	1.06	0.562	0.562
6850-06-06-06-06-NWO-FG	3/8	9/16-18	9/16-18	9/16-18	9/16-18	0.297	0.297	0.297	0.297	1.25	1.06	0.688	0.562

MORB-FPS Straight
6900-0 Series

SAE# 140157

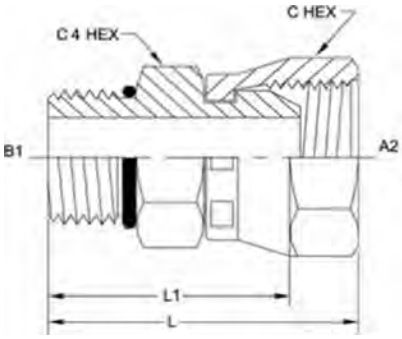

PART NO.SIZE	TUBE O.D.	B1 SAE ORB	A2 NPSM	81 DRILL	A2 DRILL	LI LGTH	L LGTH	C HEX	C4 HEX
6900-04-02-0	1/4	7/16-20	1/8-27	0.172	0.150	1.00	1.14	0.562	0.562
6900-04-04-0	1/4	7/16-20	1/4-18	0.172	0.220	1.11	1.30	0.688	0.562
6900-04-06-0	1/4	7/16-20	3/8-18	0.172	0.340	1.15	1.36	0.875	0.688
6900-04-08-0	1/4	7/16-20	1/2-14	0.172	0.460	1.21	1.49	1.000	0.812
6900-05-04-0	5/16	1/2-20	1/4-18	0.234	0.220	1.09	1.28	0.688	0.625
6900-05-08-0	5/16	1/2-20	1/2-14	0.234	0.460	1.30	1.58	1.000	0.812
6900-06-04-0	3/8	9/16-18	1/4-18	0.297	0.220	1.07	1.26	0.688	0.688
6900-06-06-0	3/8	9/16-18	3/8-18	0.297	0.340	1.25	1.46	0.875	0.688
6900-06-08-0	3/8	9/16-18	1/2-14	0.297	0.460	1.29	1.57	1.000	0.812
6900-08-04-0	1/2	3/4-16	1/4-18	0.391	0.220	1.17	1.36	0.688	0.875
6900-08-06-0	1/2	3/4-16	3/8-18	0.391	0.340	1.19	1.40	0.875	0.875
6900-08-08-0	1/2	3/4-16	1/2-14	0.391	0.460	1.27	1.55	1.000	0.875
6900-08-12-0	1/2	3/4-16	3/4-14	0.391	0.635	1.41	1.76	1.250	1.000
6900-10-06-0	5/8	7/8-14	3/8-18	0.484	0.340	1.26	1.47	0.875	1.000
6900-10-08-0	5/8	7/8-14	1/2-14	0.484	0.460	1.33	1.61	1.000	1.000
6900-10-12-0	5/8	7/8-14	3/4-14	0.484	0.635	1.37	1.72	1.250	1.000
6900-12-06-0	3/4	1-1/16-12	3/8-18	0.609	0.340	1.41	1.62	0.875	1.250
6900-12-08-0	3/4	1-1/16-12	1/2-14	0.609	0.460	1.45	1.73	1.000	1.250
6900-12-12-0	3/4	1-1/16-12	3/4-14	0.609	0.635	1.60	1.95	1.250	1.250
6900-12-16-0	3/4	1-1/16-12	1-11-1/2	0.609	0.831	1.70	2.05	1.500	1.250
6900-14-12-0	7/8	1-3/16-12	3/4-14	0.719	0.635	1.61	1.96	1.250	1.375
6900-14-16-0	7/8	1-3/16-12	1-11-1/2	0.719	0.831	1.60	1.95	1.500	1.500
6900-16-08-0	1	1-5/16-12	1/2-14	0.844	0.460	1.62	1.90	1.000	1.500
6900-16-12-0	1	1-5/16-12	3/4-14	0.844	0.635	1.73	2.08	1.250	1.500
6900-16-16-0	1	1-5/16-12	1-11-1/2	0.844	0.831	1.71	2.06	1.500	1.500
6900-16-20-0	1	1-5/16-12	1-1/4-11-1/2	0.844	1.087	1.90	2.32	1.875	1.875
6900-20-12-0	1-1/4	1-5/8-12	3/4-14	1.078	0.635	1.66	2.01	1.250	1.875
6900-20-16-0	1-1/4	1-5/8-12	1-11-1/2	1.078	0.831	1.79	2.14	1.500	1.875
6900-20-20-0	1-1/4	1-5/8-12	1-1/4-11-1/2	1.078	1.087	1.79	2.21	1.875	1.875
6900-24-20-0	1-1/2	1-7/8-12	1-1/4-11-1/2	1.312	1.087	1.75	2.17	1.875	2.125
6900-24-24-0	1-1/2	1-7/8-12	1-1/2-11-1/2	1.312	1.317	1.95	2.37	2.125	2.125
6900-32-32-0	2	2-1/2-12	2-11-1/2	1.781	1.802	2.00	2.42	2.625	2.750

Tube Fittings & Adapters

MAORB-FPS 90°
6901-NWO Series

SAE# 140257

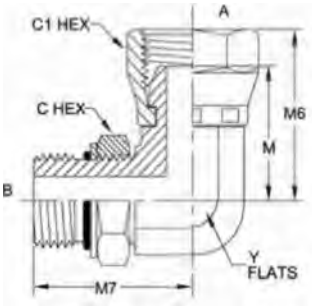

PART NO. SIZE	TUBE O.D.	B SAEORB	A NPSM	B DRILL	A DRILL	M7 LGTH	M LGTH	MG LGTH	C HEX	CI HEX	Y FLATS
6901 -04-02-NOW-FG	1/4	7/16-20	1/8-27	0.172	0.150	1.03	0.70	0.84	0.563	0.562	0.438
6901 -04-04-NWO-FG	1/4	7/16-20	1/4-18	0.172	0.220	1.19	0.88	1.07	0.563	0.688	0.562
6901 -04-06-NWO-FG	1/4	7/16-20	3/8-18	0.172	0.340	1.26	0.99	1.20	0.563	0.875	0.750
6901 -04-08-NWO-FG	1/4	7/16-20	1/2-14	0.172	0.460	1.26	1.11	1.39	0.563	1.000	0.750
6901-05-04-NWO-FG	5/16	1/2-20	1/4-18	0.234	0.220	1.13	0.88	1.07	0.625	0.688	0.562
6901-06-04-NWO-FG	3/8	9/16-18	1/4-18	0.297	0.220	1.25	0.88	1.07	0.688	0.688	0.562
6901 -06-06-NWO-FG	3/8	9/16-18	3/8-18	0.297	0.340	1.32	0.99	1.20	0.688	0.875	0.750
6901 -06-08-N WO-FG	3/8	9/16-18	1/2-14	0.297	0.460	1.32	1.11	1.39	0.688	1.000	0.750
6901 -08-04-NWO-FG	1/2	3/4-16	1/4-18	0.391	0.220	1.45	0.97	1.16	0.875	0.688	0.750
6901 -08-06-NWO-FG	1/2	3/4-16	3/8-18	0.391	0.340	1.45	0.99	1.20	0.875	0.875	0.750
6901 -08-08-NWO-FG	1/2	3/4-16	1/2-14	0.391	0.460	1.45	1.11	1.39	0.875	1.000	0.750
6901 -08-12-NWO-FG	1/2	3/4-16	3/4-14	0.391	0.635	1.62	1.30	1.65	0.875	1.250	1.062
6901 -10-04-NWO-FG	5/8	7/8-14	1/4-18	0.484	0.220	1.70	1.02	1.21	1.000	0.688	0.875
6901 -10-06-NWO-FG	5/8	7/8-14	3/8-18	0.484	0.340	1.70	1.04	1.25	1.000	0.875	0.875
6901 -10-08-NWO-FG	5/8	7/8-14	1/2-14	0.484	0.460	1.70	1.11	1.39	1.000	1.000	0.875
6901 -10-12-NWO-FG	5/8	7/8-14	3/4-14	0.484	0.635	1.78	1.30	1.65	1.000	1.250	1.062
6901-12-06-NWO-FG	3/4	1-1/16-12	3/8-18	0.609	0.340	1.94	1.26	1.47	1.250	0.875	1.062
6901 -12-08-NWO-FG	3/4	1-1/16-12	1/2-14	0.609	0.460	1.94	1.30	1.58	1.250	1.000	1.062
6901-12-12-NWO-FG	3/4	1-1/16-12	3/4-14	0.609	0.635	1.94	1.30	1.65	1.250	1.250	1.062
6901-12-16-NWO-FG	3/4	1-1/16-12	1-11-1/2	0.609	0.831	2.05	1.54	1.89	1.250	1.500	1.312
6901-14-12-NWO-FG	7/8	1-3/16-12	3/4-14	0.719	0.635	2.00	1.43	1.78	1.375	1.250	1.312
6901 -14-16-NWO-FG	7/8	1-3/16-12	1-11-1/2	0.719	0.831	2.05	1.54	1.89	1.375	1.500	1.312
6901 -16-12-NWO-FG	1	1-5/16-12	3/4-14	0.844	0.635	2.05	1.43	1.78	1.500	1.250	1.312
6901-16-16-NWO-FG	1	1-5/16-12	1-11-1/2	0.844	0.831	2.05	1.54	1.89	1.500	1.500	1.312
6901 -16-20-NWO-FG	1	1-5/16-12	1-1/4-11-1/2	0.844	1.087	2.25	1.73	2.15	1.500	1.875	1.625
6901-20-12-NWO-FG	1-1/4	1-5/8-12	3/4-14	1.078	0.635	2.25	1.56	1.91	1.875	1.250	1.625
6901-20-16-NWO-FG	1-1/4	1-5/8-12	1-11-1/2	1.078	0.831	2.25	1.70	2.05	1.875	1.500	1.625
6901 -20-20-NWO-FG	1-1/4	1-5/8-12	1-1/4-11-1/2	1.078	1.087	2.25	1.73	2.15	1.875	1.875	1.625
6901 -24-20-NWO-FG	1-1/2	1-7/8-12	1-1/4-11-1/2	1.312	1.087	2.39	1.77	2.19	2.125	1.875	1.875
6901 -24-24-NWO-FG	1-1/2	1-7/8-12	1-1/2-11-1/2	1.312	1.317	2.39	1.89	2.31	2.125	2.125	1.875
6901 -32-32-NWO-FG	2	2-1/2-12	2-11-1/2	1.781	1.802	2.89	2.27	2.69	2.750	2.625	2.500

MAORB-FPS 45°
6902-NWO Series

SAE# 140357

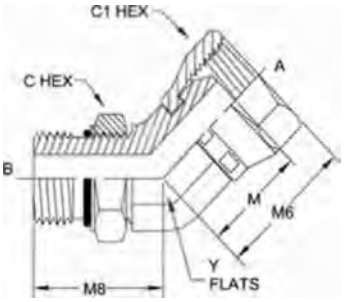

PART NO. SIZE	TUBE 0.0.	B SAE ORB	A NPSM	B DRILL	A DRILL	M8 LGTH	M LGTH	M6 LGTH	C HEX	CI HEX	Y FLATS
6902-04-04-NWO-FG	1/4	7/16-20	1/4-18	0.172	0.22	1.08	0.73	0.92	0.563	0.688	0.562
6902-04-06-NWO-FG	1/4	7/16-20	3/8-18	0.172	0.34	1.11	0.81	1.02	0.563	0.875	0.750
6902-06-04-NWO-FG	3/8	9/16-18	1/4-18	0.297	0.22	1.14	0.73	0.92	0.688	0.688	0.562
6902-06-06-NWO-FG	3/8	9/16-18	3/8-18	0.297	0.34	1.17	0.81	1.02	0.688	0.875	0.750
6902-06-08-NWO-FG	3/8	9/16-18	1/2-14	0.297	0.46	1.23	0.88	1.16	0.688	1.000	0.875
6902-08-04-NWO-FG	1/2	3/4-16	1/4-18	0.391	0.22	1.30	0.79	0.98	0.875	0.688	0.750
6902-08-06-NWO-FG	1/2	3/4-16	3/8-18	0.391	0.34	1.30	0.81	1.02	0.875	0.875	0.750
6902-08-08-NWO-FG	1/2	3/4-16	1/2-14	0.391	0.46	1.36	0.88	1.16	0.875	1.000	0.875
6902-08-12-NWO-FG	1/2	3/4-16	3/4-14	0.391	0.635	1.41	1.02	1.37	0.875	1.250	1.062
6902-10-06-NWO-FG	5/8	7/8-14	3/8-18	0.484	0.34	1.52	0.81	1.02	1.000	0.875	0.875
6902-10-08-NWO-FG	5/8	7/8-14	1/2-14	0.484	0.46	1.52	0.88	1.16	1.000	1.000	0.875
6902-10-12-NWO-FG	5/8	7/8-14	3/4-14	0.484	0.635	1.57	1.02	1.37	1.000	1.250	1.062
6902-12-06-NWO-FG	3/4	1-1/16-12	3/8-18	0.609	0.34	1.73	0.98	1.19	1.250	0.875	1.062
6902-12-08-NWO-FG	3/4	1-1/16-12	1/2-14	0.609	0.46	1.73	1.02	1.30	1.250	1.000	1.062
6902-12-12-NWO-FG	3/4	1-1/16-12	3/4-14	0.609	0.635	1.73	1.02	1.37	1.250	1.250	1.062
6902-12-16-NWO-FG	3/4	1-1/16-12	1-11-1/2	0.609	0.831	1.86	1.15	1.50	1.250	1.500	1.312
6902-16-12-NWO-FG	1	1-5/16-12	3/4-14	0.844	0.635	1.86	1.04	1.39	1.500	1.250	1.312
6902-16-16-NWO-FG	1	1-5/16-12	1-11-1/2	0.844	0.831	1.86	1.15	1.50	1.500	1.500	1.312
6902-16-20-NWO-FG	1	1-5/16-12	1-1/4-11-1/2	0.844	1.087	1.91	1.23	1.66	1.500	1.875	1.625
6902-20-16-NWO-FG	1-1/4	1-5/8-12	1-11-1/2	1.078	0.831	1.91	1.20	1.55	1.875	1.500	1.625
6902-20-20-NWO-FG	1-1/4	1-5/8-12	1-1/4-11-1/2	1.078	1.087	1.91	1.23	1.66	1.875	1.875	1.625
6902-24-24-NWO-FG	1-1/2	1-7/8-12	1-1/2-11-1/2	1.312	1.317	1.91	1.35	1.77	2.125	2.125	1.875

MAORB-FPS-FPS Tee
6911-NWO Series

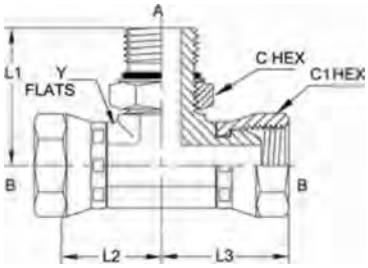

PART NO. SIZE	TUBE 0.0.	A SAE ORB	B NPSM	B NPSM	A DRILL	B ORILL	B DRILL	LI LGTH	L2 LGTH	L3 LGTH	C HEX	CI HEX	Y FLATS
6911-08-08-08-NOW-FG	1/2	3/4-16	1/2-14	1/2-14	0.391	0.44	0.44	1.45	1.11	1.39	0.875	1.000	0.875
6911-10-12-12-NOW-FG	5/8	7/8-14	3/4-14	3/4-14	0.484	0.61	0.61	1.78	1.30	1.65	1.000	1.250	1.062

Hydraulic Flanges/Accessories

Hydraulic Flanges/Accessories

Available in both forged and one-piece swept configurations, Brennan Industries now manufactures a full line of flange adapters for use with Brennan's expanded split and 4-bolt flange product line.

Made to endure extremely high working pressures and tensile strength, Brennan flange adapters are designed to perform in a variety of clearance applications.

Brennan flange adapters are available in connection sizes ranging from 1/2" to 4"

D-001

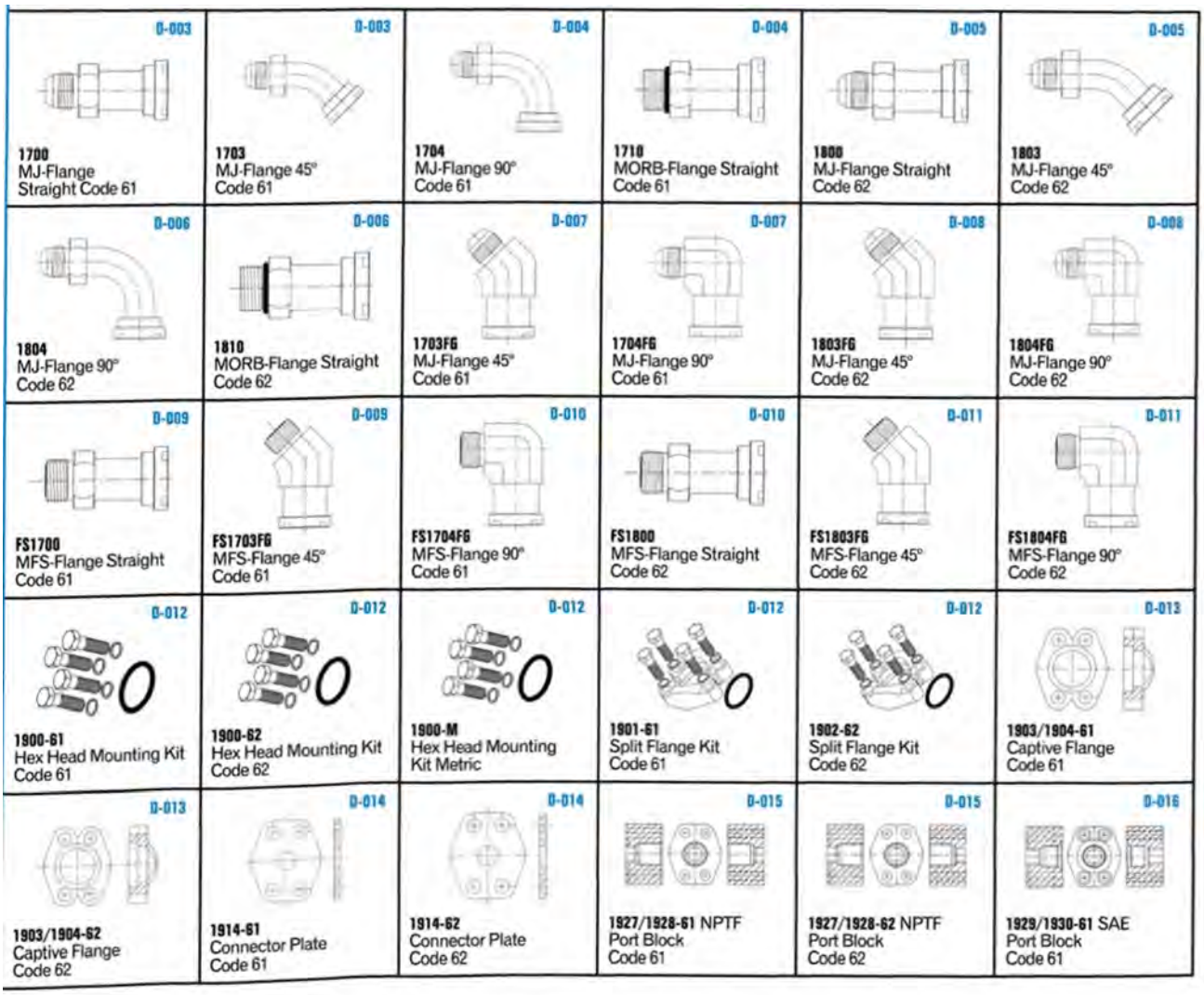

Hydraulic Flanges & Accessories

D-016 **1929/1930-62** SAE Port Block Code 62	D-017 **1933/1934** Flat Socket Block-Pipe 500 psi	D-017 **1935/1936-61** Flat Socket Block-Pipe Code 61	D-017 **1935/1936-62** Flat Socket Block-Pipe Code 62	D-018 **1937/1938-61** Flat Socket Block-Tube Code 61	D-018 **1937/1938-62** Flat Socket Block-Tube Code 62
D-019 **1940-61** Flange Spacer with Side Gage Ports Code 61	D-019 **1940-62** Flange Spacer with Side Gage Ports Code 62	D-020 **1942/1943-61** Plug Block Code 61	D-020 **1942/1943-62** Plug Block Code 62	D-021 **1951-61** Split Flange Code 61	D-021 **1951-H** Flange Halves Code 61
D-022 **1952-62** Split FLange Code 62	D-022 **1952-H** Flange Halves Code 62	D-023 **1959-P** Pipe Saddle Weld Block Connector	D-023 **1961** Grade 8 Flange Bolts Code 61	D-023 **1962** Grade 8 Flange Bolts Code 62	D-023 **1971** Lock Washers Code 61
D-023 **1972** Lock Washers Code 62	D-024 **1965-61** SAE Port Block Elbow Code 61	D-024 **1965-62** SAE Port Block Elbow Code 62	D-024 **1967-61** NPTF Port Block Elbow Code 61	D-025 **1967-62** NPTF Port Block Elbow Code 62	D-025 **1979-61** Flang Shipping Plate/ Ø-PSI Code 61
D-025 **1979-62** Flang Shipping Plate/ Ø-PSI Code 62	D-026 **1990-61** Socket Head Mounting Kit Code 61	D-026 **1990-62** Socket Head Mounting Kit Code 62	D-026 **1990-M** Socket Head Mounting Kit Metric	D-027 **3300/3301-61** Tube Braze Flange Head Connector Code 61	D-027 **3300/3301-62** Tube Braze Flange Head Connector Code 62
D-028 **Flange Head Detail** Code 61	D-028 **Flange Head Detail** Code 62	D-029 **For Codes 61&62** Maximum Working Pressure Ratings			

Additional Available Products

1724&1824. Codes 61 & 62 **Flange Plugs**
1910, Codes 61 & 62 **Tube Weld Socket Flange Connector**
1911, Codes 61 &62 **Pipe Weld Socket Flange Connector**
1912-0,Code 61 **SAE Flange Connector**
1912-P,Code61 **NFTF Flange Connector**
1915,1917 & 1919,Codes 61 &62 **Butt Weld Connector-Various Pipe Schedules**

MJ-Flange Straight
Code 61 1700 Series

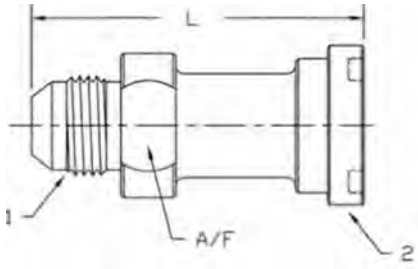

D-003

PART NO.SIZE	TUBE O.D.	1 THREAD	2 FLANGE	L (in.)	A/F (in.)
1700-08-08	1/2	3/4-16UNF	1/2	2.60	7/8
1700-08-12	1/2	3/4-16UNF	3/4	2.75	1-1/8
1700-12-12	3/4	1-1/16-12UN	3/4	2.75	1-1/8
1700-12-16	3/4	1-1/16-12UN	1	2.80	1-1/8
1700-12-20	3/4	1-1/16-12UN	1-1/4	2.80	1-3/8
1700-16-12	1	1-5/16-12UN	3/4	2.75	1-3/8
1700-16-16	1	1-5/16-12UN	1	2.80	1-3/8
1700-16-20	1	1-5/16-12UN	1-1/4	2.80	1-3/8
1700-16-24	1	1-5/16-12UN	1-1/2	2.80	1-11/16
1700-20-16	1-1/4	1-5/8-12UN	1	2.80	1-11/16
1700-20-20	1-1/4	1-5/8-12UN	1-1/4	2.80	1-11/16
1700-20-24	1-1/4	1-5/8-12UN	1-1/2	2.80	1-11/16
1700-20-32	1-1/4	1-5/8-12UN	2	3.50	1-11/16
1700-24-20	1-1/2	1-7/8-12UN	1-1/4	3.40	2
1700-24-24	1-1/2	1-7/8-12UN	1-1/2	3.50	2
1700-24-32	1-1/2	1-7/8-12UN	2	3.73	2
1700-32-24	2	2-1/2-12UN	1-1/2	4.20	2-5/8
1700-32-32	2	2-1/2-12UN	2	3.98	2-5/8

MJ-Flange 45
Code 61 1703 Series

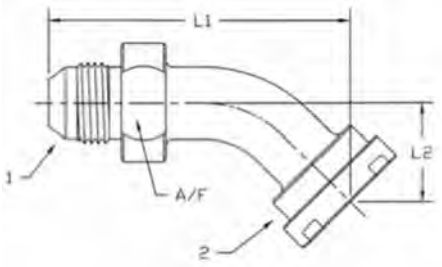

PART NO.SIZE	TUBE 0.0.	1 THREAD	2 FLANGE	LI (in.)	L2 (in.)	A/F (in.)
1703-08-08	1/2	3/4-16UNF	1/2	2.72	0.91	7/8
1703-08-12	1/2	3/4-16UNF	3/4	2.72	0.94	7/8
1703-12-12	3/4	1-1/16-12UN	3/4	3.15	1.02	1-1/8
1703-12-16	3/4	1-1/16-12UN	1	3.15	1.02	1-1/8
1703-12-20	3/4	1-1/16-12UN	1-1/4	3.15	1.02	1-1/8
1703-16-12	1	1-5/16-12UN	3/4	3.66	1.18	1-3/8
1703-16-16	1	1-5/16-12UN	1	3.66	1.18	1-3/8
1703-16-20	1	1-5/16-12UN	1-1/4	3.66	1.18	1-3/8
1703-16-24	1	1-5/16-12UN	1-1/2	3.74	1.26	1-3/8
1703-20-12	1-1/4	1-5/8-12UN	3/4	3.78	1.18	1-11/16
1703-20-16	1-1/4	1-5/8-12UN	1	3.86	1.22	1-11/16
1703-20-20	1-1/4	1-5/8-12UN	1-1/4	4.21	1.38	1-11/16
1703-20-24	1-1/4	1-5/8-12UN	1-1/2	4.25	1.42	1-11/16
1703-24-20	1-1/2	1-7/8-12UN	1-1/4	4.70	1.46	2
1703-24-24	1-1/2	1-7/8-12UN	1-1/2	4.96	1.69	2
1703-24-32	1-1/2	1-7/8-12UN	2	5.12	1.81	2
1703-32-32	2	2-1/2-12UN	2	6.22	2.17	2-3/4

Hydraulic Flanges & Accessories

MJ-Flange 90°
Code 61 1704 Series

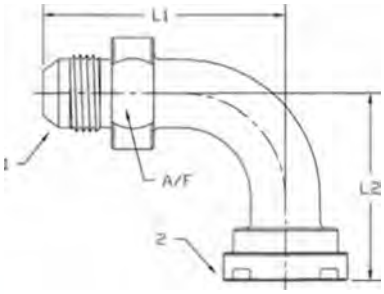

D-004

PART ND.SIZE	TUBE O.D.	1 THREAD	2 FLANGE	LI (in.)	12 (in.)	A/F (in.)
1704-08-08	1/2	3/4-16UNF	1/2	2.32	1.81	7/8
1704-08-12	1/2	3/4-16UNF	3/4	2.32	1.85	7/8
1704-12-12	3/4	1-1/16-12UN	3/4	2.83	2.13	1-1/8
1704-12-16	3/4	1-1/16-12UN	1	2.83	2.13	1-1/8
1704-12-20	3/4	1-1/16-12UN	1-1/4	2.83	2.13	1-1/8
1704-16-12	1	1-5/16-12UN	3/4	2.95	2.13	1-3/8
1704-16-16	1	1-5/16-12UN	1	3.39	2.60	1-3/8
1704-16-20	1	1-5/16-12UN	1-1/4	3.39	2.60	1-3/8
1704-16-24	1	1-5/16-12UN	1-1/2	3.39	2.66	1-3/8
1704-20-16	1-1/4	1-5/8-12UN	1	3.54	2.60	1-11/16
1704-20-20	1-1/4	1-5/8-12UN	1-1/4	3.98	3.03	1-11/16
1704-20-24	1-1/4	1-5/8-12UN	1-1/2	3.98	3.11	1-11/16
1704-24-20	1-1/2	1-7/8-12UN	1-1/4	4.21	3.03	2
1704-24-24	1-1/2	1-7/8-12UN	1-1/2	4.57	3.66	2
1704-24-32	1-1/2	1-7/8-12UN	2	4.57	3.86	2
1704-32-24	2	2-1/2-12UN	1-1/2	5.04	3.66	2-3/4
1704-32-32	2	2-1/2-12UN	2	5.79	4.84	2-3/4
1704-32-40	2	2-1/2-12UN	2-1/2	5.91	4.92	2-3/4

MORB-Flange Straight
Code 61 1710 Series

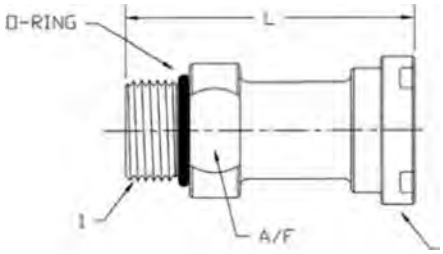

PART NO.SIZE	TUBE U.D.	1 THREAD	2 FLANGE	L (in.)	A/F (in.)
1710-08-08	1/2	3/4-16UNF	1/2		7/8
1710-12-12	3/4	1-1/16-12UN	3/4		1-1/4
1710-16-16	1	1-5/16-12UN	1		1-1/2
1710-20-20	1-1/4	1-5/8-12UN	1-1/4		1-7/8
1710-24-24	1-1/2	1-7/8-12UN	1-1/2		2-1/8
1710-32-32	2	2-1/2-12UN	2		2-3/4

MJ-Flange Straight
Code 62 1800 Series

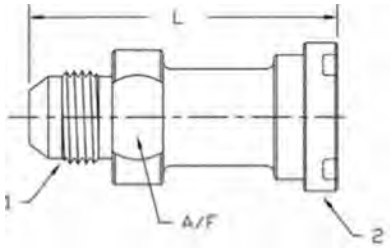

PART NO.SIZE	TUBE 1 O.D.	1 THREAD	2 FLANGE	I (in.)	A/F (in.)
1800-08-08	1/2	3/4-16UNF	1/2	2.61	7/8
1800-12-12	3/4	1-1/16-12UN	3/4	2.75	1-1/8
1800-12-16	3/4	1-1/16-12UN	1	2.80	1-1/8
1800-16-12	1	1-5/16-12UN	3/4	2.75	1-3/8
1800-16-16	1	1-5/16-12UN	1	2.80	1-3/8
1800-16-20	1	1-5/16-12UN	1-1/4	3.05	1-3/8
1800-16-24	1	1-5/16-12UN	1-1/2	3.05	1-3/8
1800-20-16	1-1/4	1-5/8-12UN	1	3.50	1-11/16
1800-20-20	1-1/4	1-5/8-12UN	1-1/4	3.05	1-11/16
1800-20-24	1-1/4	1-5/8-12UN	1-1/2	3.50	1-11/16
1800-24-20	1-1/2	1-7/8-12UN	1-1/4	3.30	2
1800-24-24	1-1/2	1-7/8-12UN	1-1/2	3.50	2-5/8
1800-32-32	2	2-1/2-12UN	2	4.23	2-3/4

MJ-Flange 45°
Code 62 1803 Series

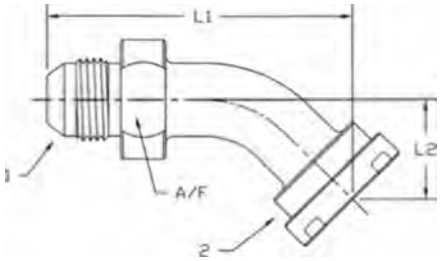

PART NO.SIZE	TUBE O.D.	1 THREAD	2 FLANGE	LI (in.)	L2 (in.)	A/F (in.)
1803-08-08	1/2	3/4-16UNF	1/2	2.76	0.94	7/8
1803-12-12	3/4	1-1/16-12UN	3/4	3.31	1.14	1-1/8
1803-12-16	3/4	1-1/16-12UN	1	3.35	1.22	1-1/8
1803-16-12	1	1-5/16-12UN	3/4	3.46	1.18	1-3/8
1803-16-16	1	1-5/16-12UN	1	3.86	1.38	1-3/8
1803-16-20	1	1-5/16-12UN	1-1/4	3.98	1.50	1-3/8
1803-16-24	1	1-5/16-12UN	1-1/2	4.13	1.61	1-3/8
1803-20-16	1-1/4	1-5/8-12UN	1	4.13	1.42	1-11/16
1803-20-20	1-1/4	1-5/8-12UN	1-1/4	4.53	1.65	1-11/16
1803-20-24	1-1/4	1-5/8-12UN	1-1/2	4.65	1.81	1-11/16
1803-24-24	1-1/2	1-7/8-12UN	1-1/2	5.16	1.93	2
1803-32-32	2	2-1/2-12UN	2	6.54	2.48	2-3/4

Hydraulic Flanges & Accessories

M J-Flange 90°
Code 62 1804 Series

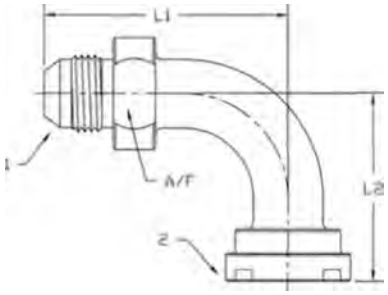

PART NO.SIZE	TUBE O.D.	1 THREAD	2 FLANGE	LI (in.)	L2 (in.)	A/F (in.)
1804-08-08	1/2	3/4-16UNF	1/2	2.32	1.85	7/8
1804-12-12	3/4	1-1/16-12UN	3/4	2.83	2.28	1-1/8
1804-12-16	3/4	1-1/16-12UN	1	2.83	2.40	1-1/8
1804-12-20	3/4	1-1/16-12UN	1-1/4	2.83	2.76	1-1/8
1804-16-12	1	1-5/16-12UN	3/4	2.93	2.28	1-3/8
1804-16-16	1	1-5/16-12UN	1	3.39	2.87	1-3/8
1804-16-20	1	1-5/16-12UN	1-1/4	3.39	3.03	1-3/8
1804-16-24	1	1-5/16-12UN	1-1/2	3.39	3.23	1-3/8
1804-20-16	1-1/4	1-5/8-12UN	1	3.54	2.87	1-11/16
1804-20-20	1-1/4	1-5/8-12UN	1-1/4	3.98	3.46	1-11/16
1804-20-24	1-1/4	1-5/8-12UN	1-1/2	3.98	3.66	1-11/16
1804-24-16	1-1/2	1 -7/8-12UN	1	3.94	2.87	2
1804-24-20	1-1/2	1-7/8-12UN	1-1/4	4.33	3.46	2
1804-24-24	1-1/2	1-7/8-12UN	1-1/2	4.57	4.02	2
1804-32-32	2	2-1/2-12UN	2	5.79	5.31	2-3/4

MORB-Flange Straight
Code 62 1810 Series

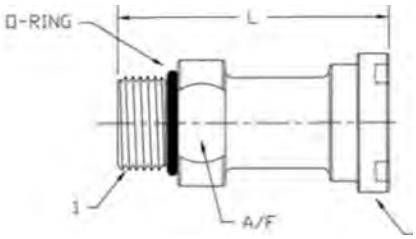

PART NO.SIZE	TUBE O.D.	1 THREAD	2 FLANGE	L (in.)	A/F (in.)
1810-08-08	1/2	3/4-16UNF	1/2		7/8
1810-12-12	3/4	1-1/16-12UN	3/4		1-1/4
1810-16-16	1	1-5/16-12UN	1		1-1/2
1810-20-20	1-1/4	1-5/8-12UN	1-1/4		1-7/8
1810-24-24	1-1/2	1-7/8-12UN	1-1/2		2-1/8
1810-32-32	2	2-1/2-12UN	2		2-3/4

MJ-Flange 45°
Code 61 1703FG Series

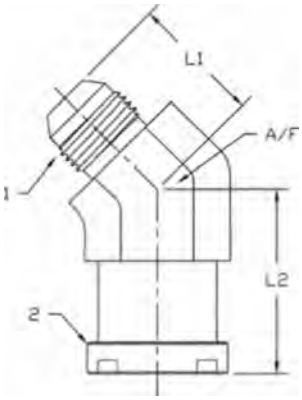

PART NO.SIZE	TUBE O.D.	1 THREAD	2 FLANGE	LI (in.)	12 (in.)	A/F (in.)
1703-12-12-FG	3/4	1-1/16-12UN	3/4	1.28	1.58	1-1/16
1703-16-16-FG	1	1-5/16-12UN	1	1.47	1.85	1-5/16
1703-20-20-FG	1-1/4	1-5/8-12UN	1-1/4	1.59	2.04	1-5/8
1703-24-24-FG	1-1/2	1-7/8-12UN	1-1/2	1.78	2.38	1-7/8
1703-32-32-FG	2	2-1/2-12UN	2	2.22	3.00	2-5/8

MJ-Flange 90°
Code 61 1704FG Series

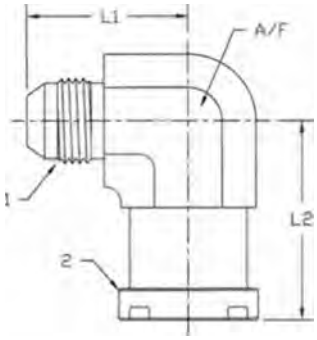

PART NO.SIZE	TUBE 0.0.	1 THREAD	2 FLANGE	LI (in.)	L2 (in.)	A/F (in.)
1704-08-12-FG	1/2	3/4-16UNF	3/4	1.66	2.13	1-1/16
1704-12-12-FG	3/4	1-1/16-12UN	3/4	1.66	2.13	1-1/16
1704-12-16-FG	3/4	1-1/16-12UN	1	1.81	2.37	1-5/16
1704-12-20-FG	3/4	1-1/16-12UN	1-1/4	1.97	2.62	1-5/16
1704-12-24-FG	3/4	1-1/16-12UN	1-1/2	2.20	3.15	1-5/8
1704-16-12-FG	1	1-5/16-12UN	3/4	1.66	2.13	1-5/16
1704-16-16-FG	1	1-5/16-12UN	1	2.02	2.37	1-5/16
1704-16-20-FG	1	1-5/16-12UN	1-1/4	2.02	2.62	1-5/16
1704-20-16-FG	1-1/4	1-5/8-12UN	1	1.90	2.37	1-5/8
1704-20-20-FG	1-1/4	1-5/8-12UN	1-1/4	2.06	2.62	1-5/8
1704-20-24-FG	1-1/4	1-5/8-12UN	1-1/2	2.33	3.15	1-5/8
1704-24-20-FG	1-1/2	1-7/8-12UN	1-1/4	2.19	2.62	1-7/8
1704-24-24-FG	1-1/2	1-7/8-12UN	1-1/2	2.33	3.15	1-7/8
1704-24-32-FG	1-1/2	1-7/8-12UN	2	3.06	4.25	1-7/8
1704-32-24-FG	2	2-1/2-12UN	1-1/2	3.06	4.25	2-5/8
1704-32-32-FG	2	2-1/2-12UN	2	3.06	4.25	2-5/8

MJ-Flange 45°
Code 62 1803FG Series

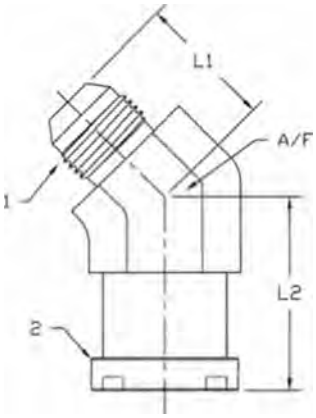

PART NO.SIZE	TUBE O.D.	1 THREAD	2 FLANGE	LI (in.)	L2 (in.)	A/F (in.)
1803-12-12-FG	3/4	1-1/16-12UN	3/4	1.28	1.58	1-1/16
1803-16-16-FG	1	1-5/16-12UN	1	1.47	1.85	1-5/16
1803-20-20-FG	1-1/4	1-5/8-12UN	1-1/4	1.59	2.04	1-5/8
1803-24-24-FG	1-1/2	1-7/8-12UN	1-1/2	1.78	2.90	1-7/8
1803-32-32-FG	2	2-1/2-12UN	2	2.22	3.00	2-5/8

MJ-Flange 90°
Code 62 1804FG Series

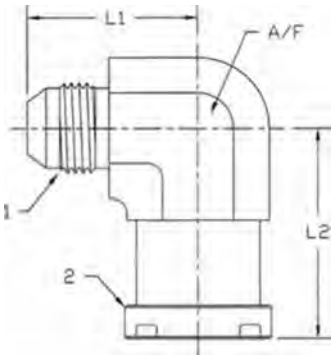

PART NO.SIZE	TUBE O.D.	1 THREAD	2 FLANGE	11 (in.)	12 (in.)	A/F (in.)
1804-12-12-FG	3/4	1-1/16-12UN	3/4	1.72	2.13	1-1/16
1804-12-16-FG	3/4	1-1/16-12UN	1	1.81	2.37	1-5/16
1804-16-12-FG	1	1-5/16-12UN	3/4	1.81	2.13	1-5/16
1804-16-16-FG	1	1-5/16-12UN	1	2.06	2.37	1-5/16
1804-16-20-FG	1	1-5/16-12UN	1-1/4	2.06	2.76	1-5/16
1804-20-16-FG	1-1/4	1-5/8-12UN	1	2.06	2.72	1-5/8
1804-20-20-FG	1-1/4	1-5/8-12UN	1-1/4	2.06	2.76	1-5/8
1804-20-24-FG	1-1/4	1-5/8-12UN	1-1/2	2.33	3.15	1-5/8
1804-24-20-FG	1-1/2	1-7/8-12UN	1-1/4	2.19	2.76	1-7/8
1804-24-24-FG	1-1/2	1 -7/8-12UN	1-1/2	2.33	3.15	1-7/8
1804-24-32-FG	1-1/2	1-7/8-12UN	2	3.06	4.25	2-5/8
1804-32-24-FG	2	2-1/2-12UN	1-1/2	3.06	4.25	2-5/8
1804-32-32-FG	2	2-1/2-12UN	2	3.06	4.25	2-5/8

MFS-Flange Straight
Code 61 FS1700 Series

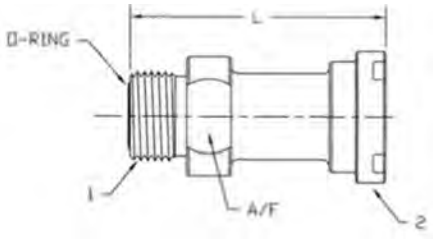

D-009

PART NO.SIZE	TUBE O.D.	1 THREAD	2 FLANGE	I (in.)	A/F (in.)
FS1700-08-08	1/2	13/16-16UN	1/2	2.45	7/8
FS1700-12-12	3/4	1-3/16-12UN	3/4	2.75	1-1/4
FS1700-12-16	3/4	1-3/16-12UN	1	2.80	1-1/4
FS1700-16-12	1	1-7/16-12UN	3/4	2.75	1-1/2
FS1700-16-16	1	1-7/16-12UN	1	2.80	1-1/2
FS1700-16-20	1	1-7/16-12UN	1-1/4	2.80	1-1/2
FS1700-20-16	1-1/4	1-11/16-12UN	1	2.80	1-7/8
FS1700-20-20	1-1/4	1-11/16-12UN	1-1/4	2.80	1-7/8
FS 1700-20-24	1-1/4	1-11/16-12UN	1-1/2	3.50	1-7/8
FS1700-24-20	1-1/2	2-12UN	1-1/4	3.20	2-1/8
FS1700-24-24	1-1/2	2-12UN	1-1/2	3.50	2-1/8
FS1700-24-32	1-1/2	2-12UN	2	3.33	2-1/8

MFS-Flange 45°
Code 61 FS1703FG Series

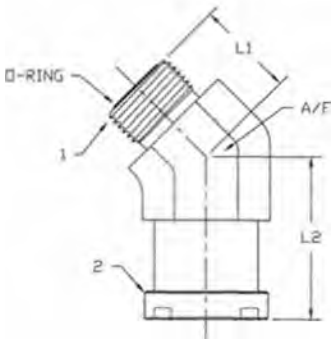

PART NG.SIZE	TUBE O.D.	1 THREAD	2 FLANGE	11 (in.)	L2 (in.)	A/F (in.)
FS1703-12-12-FG	3/4	1-3/16-12UN	3/4	1.28	1.58	1-1/8
FS1703-16-16-FG	1	1-7/16-12UN	1	1.47	1.85	1-3/8
FS1703-20-20-FG	1-1/4	1-11/16-12UN	1-1/4	1.59	2.04	1-11/16
FS1703-24-24-FG	1-1/2	2-12UN	1-1/2	1.78	2.38	2

Hydraulic Flanges & Accessories

MFS-Flange 90°
Code 61 FS1704FG Series

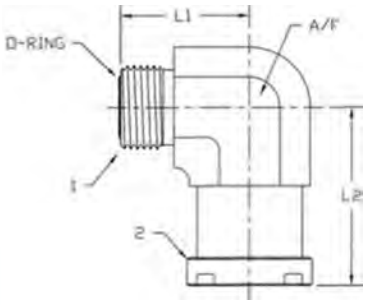

PART NO.SIZE	TUBE O.D.	1 THREAD	2 FLANGE	LI (in.)	L2 (in.)	A/F (in.)
FS1704-12-12-FG	3/4	1-3/16-12UN	3/4	2.13	1.66	1-3/16
FS1704-12-16-FG	3/4	1-3/16-12UN	1	2.37	1.81	1-3/16
FS1704-16-12-FG	1	1-7/16-12UN	3/4	2.13	1.66	1-7/16
FS1704-16-16-FG	1	1-7/16-12UN	1	2.37	1.81	1-7/16
FS1704-16-20-FG	1	1-7/16-12UN	1-1/4	2.62	2.06	1-7/16
FS1704-20-16-FG	1-1/4	1-11/16-12UN	1	2.37	1.81	1-5/8
FS1704-20-20-FG	1-1/4	1-11/16-12UN	1-1/4	2.62	2.06	1-5/8
FS1704-20-24-FG	1-1/4	1-11/16-12UN	1-1/2	3.15	2.33	1-5/8
FS1704-24-20-FG	1-1/2	2-12UN	1-1/4	2.62	2.06	1-7/8
FS1704-24-24-FG	1-1/2	2-12UN	1-1/2	3.15	2.33	1-7/8

MFS-Flange Straight
Code 62 FS1800 Series

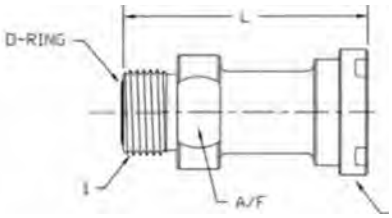

PART NO.SIZE	TUBE O.D.	1 THREAD	2 FLANGE	I (In.)	A/F (in.)
FS1800-08-08	1/2	13/16-16UN	1/2	2.58	7/8
FS1800-12-12	3/4	1-3/16-12UN	3/4	2.75	1-1/4
FS1800-12-16	3/4	1-3/16-12UN	1	2.80	1-1/4
FS1800-16-12	1	1-7/16-12UN	3/4	2.75	1-1/2
FS1800-16-16	1	1-7/16-12UN	1	2.80	1-1/2
FS1800-16-20	1	1-7/16-12UN	1-1/4	3.05	1-1/2
FS1800-20-16	1-1/4	1-11/16-12UN	1	3.20	1-7/8
FS1800-20-20	1-1/4	1-11/16-12UN	1-1/4	3.05	1-7/8
FS 1800-20-24	1-1/4	1-11/16-12UN	1-1/2	3.50	1-3/4
FS 1800-24-20	1-1/2	2-12UN	1-1/4	3.30	2-1/8
FS1800-24-24	1-1/2	2-12UN	1-1/2	3.50	2-1/8
FS 1800-24-32	1-1/2	2-12UN	2	3.58	2-1/8

MFS-Flange 45°
Code 62 FS1803FG Series

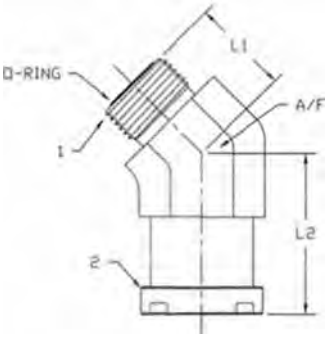

D-011

PART NO.SIZE	TUBE 0.0.	1 THREAD	2 FLANGE	LI (in.)	L2 (in.)	A/F (in.)
FS1803-12-12-FG	3/4	1-3/16-12UN	3/4	1.28	1.58	1-1/8
FS1803-16-16-FG	1	1-7/16-12UN	1	1.47	1.85	1-3/8
FS1803-20-20-FG	1-1/4	1-11/16-12UN	1-1/4	1.59	2.04	1-11/16
FS1803-24-24-FG	1-1/2	2-12UN	1-1/2	1.78	2.38	2

MFS-Flange 90°
Code 62 FS1804FG Series

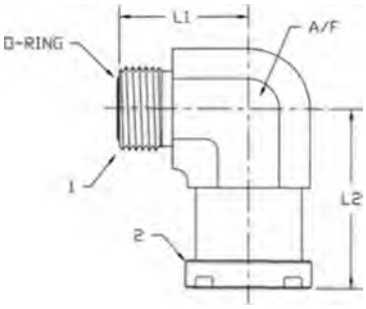

PART NO.SIZE	TUBE 0.0.	1 THREAD	2 FLANGE	11 (in.)	L2 (in.)	A/F (in.)
FS1804-12-12-FG	3/4	1-3/16-12UN	3/4	2.13	1.66	1-3/16
FS1804-12-16-FG	3/4	1-3/16-12UN	1	2.37	1.81	1-3/16
FS1804-16-12-FG	1	1-7/16-12UN	3/4	2.13	1.66	1-7/16
FS1804-16-16-FG	1	1-7/16-12UN	1	2.37	1.81	1-7/16
FS1804-16-20-FG	1	1-7/16-12UN	1-1/4	2.76	2.06	1-7/16
FS1804-20-16-FG	1-1/4	1-11/16-12UN	1	2.37	1.81	1-5/8
FS1804-20-20-FG	1-1/4	1-11/16-12UN	1-1/4	2.76	2.06	1-5/8
FS1804-20-24-FG	1-1/4	1-11/16-12UN	1-1/2	3.15	2.33	1-5/8
FS1804-24-20-FG	1-1/2	2-12UN	1-1/4	2.76	2.06	1-7/8
FS1804-24-24-FG	1-1/2	2-12UN	1-1/2	3.15	2.33	1-7/8

Hydraulic Flanges & Accessories

Hex Head Mounting Kit Code 61 1900-61 Series

PART NO.SIZE	FLANGE SIZE
1900-61 -08-K	1/2
1900-61 -12-K	3/4
1900-61-16-K	1
1900-61-20-K	1-1/4
1900-61-24-K	1-1/2
1900-61-32-K	2
1900-61-40-K	2-1/2
1900-61-48-K	3
1900-61-56-K	3-1/2
1900-61-64-K	4

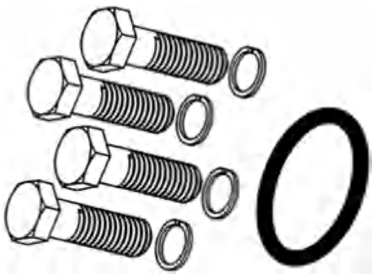

D-012

Hex Head Mounting Kit Code 62 1900-62 Series

PART NO.SIZE	FLANGE SIZE
1900-62-08-K	1/2
1900-62-12-K	3/4
1900-62-16-K	1
1900-62-20-K	1-1/4
1900-62-24-K	1-1/2
1900-62-32-K	2

Mounting Kit:4 hex head bolts,4 lock washers,and t Buna-No-ring

Hex Head Mounting Kit Metric 1900-M Series

PART NO.SIZE
1900-M08-K
1900-M10-K
1900-MI 2-K
1900-MI 6-K
1900-M20-K
1900-M24-K
1900-M30-K

Mounting Kit:4 hex head bolts,4 lock washers,and 1 Buna-No-ring

Split Flange Kit Split Flange Kit Code 61 1901 Series Code 62 1902 Series

1901-08-K	1/2
1901-12-K	3/4
1901-16-K	1
1901-20-K	1-1/4
1901-24-K	1-1/2
1901-32-K	2
1901-40-K	2-1/2
1901-48-K	3
1901-56-K	3-1/2
1901-64-K	4

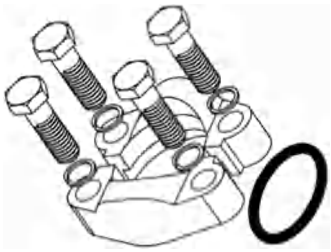

1902-08-K	1/2
1902-12-K	3/4
1902-16-K	1
1902-20-K	1-1/4
1902-24-K	1-1/2
1902-32-K	2

Split Flange Kit:2 split flange halves,4 hex head bolts,4 lock washers,and 1 Buna-NO-ring. See 1900 Series for MountingKit without split flange halves.

Captive Flange
Code 61 1903-61 Series
Code 61 1904-61 Series

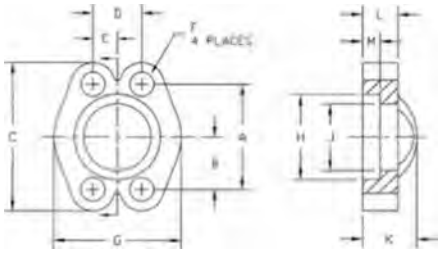

PART NO. DRILLED HOLES	PART NO. TAPPED HOLES	FLANGE SIZE	A ±.010	8 ±.010	C ±.030	0 ±.010	E ±.010	F ±.010	F THD.	G ±.030	H ±.010	J ±.010	K ±.010	L ±.010	M ±.005
1903-61-08	1904-61-08	1/2	1.500	0.750	2.12	0.688	0.344	0.344	5/16-18	1.81	1.219	0.955	0.75	0.50	0.245
1903-61-12	1904-61-12	3/4	1.875	0.938	2.56	0.875	0.438	0.406	3/8-16	2.06	1.531	1.265	0.88	0.56	0.245
1903-61-16	1904-61-16	1	2.062	1.031	2.75	1.031	0.516	0.406	3/8-16	2.31	1.781	1.515	0.94	0.62	0.295
1903-61-20	1904-61-20	1-1/4	2.312	1.156	3.12	1.188	0.594	0.469	7/16-14	2.88	2.031	1.720	0.88	0.56	0.295
1903-61-24	1904-61-24	1-1/2	2.750	1.375	3.69	1.406	0.703	0.531	1/2-13	3.25	2.406	2.000	1.00	0.62	0.295
1903-61-32	1904-61-32	2	3.062	1.531	4.00	1.688	0.844	0.531	1/2-13	3.81	2.844	2.470	1.03	0.62	0.355
1903-61-40	1904-61-40	2-1/2	3.500	1.750	4.50	2.000	1.000	0.531	1/2-13	4.28	3.344	2.950	1.50	0.75	0.355
1903-61-48	1904-61-48	3	4.188	2.094	5.31	2.438	1.219	0.656	5/8-11	5.16	4.031	3.580	1.62	0.88	0.355
1903-61-56	1904-61-56	3-1/2	4.750	2.375	6.00	2.750	1.375	0.656	5/8-11	5.50	4.531	4.030	1.12	0.88	0.422
1903-61-64	1904-61-64	4	5.125	2.562	6.38	3.062	1.531	0.656	5/8-11	6.00	5.031	4.530	1.38	1.00	0.422

Captive Flange
Code 62 1903-62 Series
Code 62 1904-62 Series

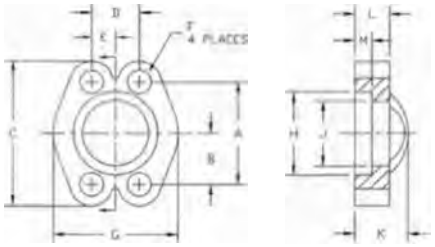

PART NO. DRILLED HOLES	PART NO. TAPPED HOLES	FLANGE SIZE	A ±.010	B ±.010	G ±.030	0 ±.010	E ±.010	F ±.010	F THD.	G ±.030	H ±.010	J ±.010	X ±.010	L ±.010	M ±.005
1903-62-12	1904-62-12	3/4	2.000	1.000	2.81	0.938	0.469	0.406	3/8-16	2.38	1.656	1.280	1.12	0.75	0.325
1903-62-16	1904-62-16	1	2.250	1.125	3.19	1.094	0.547	0.469	7/16-14	2.75	1.906	1.530	1.31	0.94	0.355
1903-62-20	1904-62-20	1-1/4	2.625	1.313	3.75	1.250	0.625	0.531	1/2-13	3.06	2.156	1.750	1.50	1.06	0.385
1903-62-24	1904-62-24	1-1/2	3.125	1.563	4.44	1.438	0.719	0.656	5/8-11	3.75	2.531	2.030	1.69	1.19	0.475
1903-62-32	1904-62-32	2	3.812	1.906	5.25	1.750	0.875	0.781	3/4-10	4.50	3.156	2.660	2.06	1.44	0.475

Connector Plate
Code 61 1914 Series

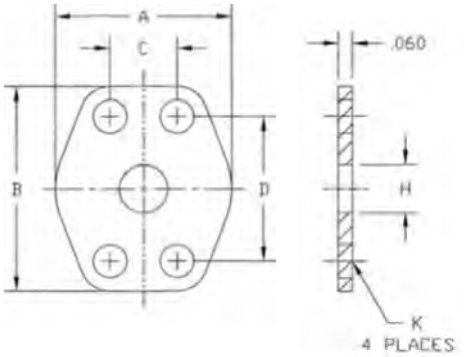

PART NO.SIZE	FLANGE SIZE	A	B	C	D	H	K DRILL
1914-61-08	1/2	1.810	2.120	0.688	1.500	0.500	0.344
1914-61-12	3/4	2.060	2.560	0.875	1.875	0.750	0.406
1914-61-16	1	2.310	2.750	1.031	2.062	1.000	0.406
1914-61-20	1-1/4	2.880	3.120	1.188	2.312	1.250	0.469
1914-61-24	1-1/2	3.250	3.690	1.406	2.750	1.500	0.531
1914-61-32	2	3.810	4.000	1.688	3.062	2.000	0.531
1914-61-40	2-1/2	4.120	4.440	2.000	3.500	2.500	0.531
1914-61-48	3	5.160	5.310	2.438	4.188	3.000	0.656

Connector Plate
Code 62 1914 Series

PART NO.SIZE	FLANGE SIZE	A	B	C	D	H	K DRILL
1914-62-12	3/4	2.380	2.810	0.937	2.000	0.750	0.406
1914-62-16	1	2.750	3.190	1.093	2.250	1.000	0.469
1914-62-20	1-1/4	3.060	3.750	1.250	2.625	1.250	0.531
1914-62-24	1-1/2	3.750	4.440	1.437	3.125	1.500	0.656
1914-62-32	2	4.500	5.250	1.750	3.812	2.000	0.781

NPTF Port Block
Code 61 1927-61 Series
Code 61 1928-61 Series

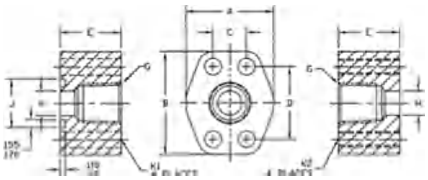

PART NO. O-RING FACE	PART NO. FLAT FACE	PIPE SIZE	FLANGE SIZE	A	B	C	0	E	G NPTF	H	J MIN	J MAX	K1 DRILL	K2 THD.
1927-61-08-08	1928-61-08-08	1/2	1/2	1.82	2.17	0.688	1.500	1.25	1/2-14	0.50	1.000	1.005	0.344	5/16-18
1927-61-12-12	1928-61-12-12	3/4	3/4	2.06	2.69	0.875	1.875	1.25	3/4-14	0.75	1.250	1.255	0.406	3/8-16
1927-61-16-16	1928-61-16-16	1	1	2.31	2.88	1.031	2.062	1.50	1-11 1/2	1.00	1.560	1.565	0.406	3/8-16
1927-61-20-20	1928-61-20-20	1-1/4	1-1/4	2.88	3.25	1.188	2.312	1.50	1-1/4-11 1/2	1.25	1.750	1.755	0.469	7/16-14
1927-61-24-24	1928-61-24-24	1-1/2	1-1/2	3.25	3.81	1.406	2.750	1.75	1-1/2-11 1/2	1.50	2.115	2.125	0.531	1/2-13
1927-61-32-32	1928-61-32-32	2	2	3.81	4.13	1.688	3.062	1.75	2-11 1/2	2.00	2.490	2.500	0.531	1/2-13
1927-61-40-40	1928-61-40-40	2-1/2	2-1/2	4.28	4.63	2.000	3.500	2.00	2-1/2-8	2.50	2.995	3.005	0.531	1/2-13
1927-61-48-48	1928-61-48-48	3	3	5.16	5.44	2.438	4.188	2.25	3-8	3.00	3.615	3.625	0.656	5/8-11

All items available with metric mounting holes upon request.

NPTF Port Block
Code 62 1927-62 Series
Code 62 1928-62 Series

PART NO. O-RING FACE	PART NO. FLAT FACE	PIPE SIZE	FLANGE SIZE	A	B	C	0	E	G NPTF	H	J MIN	J MAX	K1 DRILL	K2 THD.
1927-62-08-08	1928-62-08-08	1/2	1/2	1.94	2.30	0.718	1.594	1.25	1/2-14	0.50	1.000	1.005	0.344	5/16-18
1927-62-12-12	1928-62-12-12	3/4	3/4	2.38	2.81	0.937	2.000	1.25	3/4-14	0.75	1.250	1.255	0.406	3/8-16
1927-62-16-16	1928-62-16-16	1	1	2.75	3.19	1.093	2.250	1.50	1-11 1/2	1.00	1.560	1.565	0.469	7/16-14
1927-62-20-20	1928-62-20-20	1-1/4	1-1/4	3.06	3.75	1.25	2.625	1.50	1-1/4-11 1/2	1.25	1.750	1.755	0.531	1/2-13
1927-62-24-24	1928-62-24-24	1-1/2	1-1/2	3.75	4.44	1.437	3.125	1.75	1-1/2-11 1/2	1.50	2.115	2.125	0.656	5/8-11
1927-62-32-32	1928-62-32-32	2	2	4.50	5.25	1.750	3.812	1.75	2-11 1/2	2.00	2.490	2.500	0.781	3/4-10

All items available with metric mounting holes upon request.

Hydraulic Flanges & Accessories

SAE Port Block
Code 61 1929-61 Series
Code 61 1930-61 Series

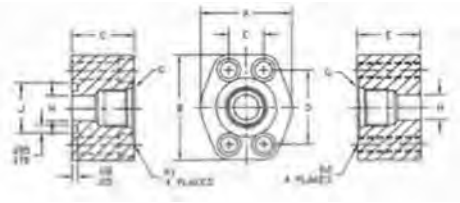

PART NO. O-RING FACE	PART NO. FLAT FACE	PIPE FLANGE SIZE	FLANGE SIZE	G A	J B	J C	K1 0	K2 E	THREAD H	MIN	MAX	DRILL	THD.
1929-61-08-08	1930-61-08-08	1/2	1/2	1.820	2.17	0.688	1.500	1.25	3/4-16	0.50	1.000	1.005	0.344	5/16-18
1929-61-12-12	1930-61-12-12	3/4	3/4	2.060	2.69	0.875	1.875	1.25	1-1/16-12	0.75	1.250	1.255	0.406	3/8-16
1929-61-16-16	1930-61-16-16	1	1	2.310	2.88	1.031	2.062	1.50	1-5/16-12	1.00	1.560	1.565	0.406	3/8-16
1929-61-20-20	1930-61-20-20	1-1/4	1-1/4	2.880	3.25	1.188	2.312	1.50	1-5/8-12	1.25	1.750	1.755	0.469	7/16-14
1929-61-24-24	1930-61-24-24	1-1/2	1-1/2	3.250	3.81	1.406	2.750	1.75	1-7/8-12	1.50	2.115	2.125	0.531	1/2-13

All items available with metric mounting holes upon request.

SAE Port Block
Code 62 1929-62 Series
Code 62 1930-62 Series

PART NO. O-RING FACE	PART NO. FLAT FACE	PIPE FLANGE SIZE	FLANGE SIZE	G A	J B	J C	K1 D	K2 E	THREAD H	MIN	MAX	DRILL	THD.
1929-62-08-08	1930-62-08-08	1/2	1/2	1.94	2.30	0.718	1.594	1.25	3/4-16	0.50	1.000	1.005	0.344	5/16-18
1929-62-12-12	1930-62-12-12	3/4	3/4	2.38	2.81	0.937	2.000	1.25	1-1/16-12	0.75	1.250	1.255	0.406	3/8-16
1929-62-16-16	1930-62-16-16	1	1	2.75	3.19	1.093	2.250	1.50	1-5/16-12	1.00	1.560	1.565	0.469	7/16-14
1929-62-20-20	1930-62-20-20	1-1/4	1-1/4	3.06	3.75	1.25	2.625	1.50	1-5/8-12	1.25	1.750	1.755	0.531	1/2-13
1929-62-24-24	1930-62-24-24	1-1/2	1-1/2	3.75	4.44	1.437	3.125	1.75	1-7/8-12	1.50	2.115	2.125	0.656	5/8-11
1929-62-32-32	1930-62-32-32	2	2	4.50	5.25	1.750	3.812	1.75	2-1/2-12	2.00	2.490	2.500	0.781	3/4-10

All items available with metric mounting holes upon request.

Flat Socket Block - Pipe 500 psi 1933 Series and 1934 Series

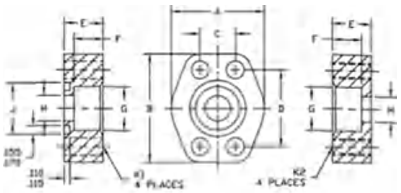

D-017

PART NO. 0-RING FACE	PART NO. FLAT FACE	PIPE SIZE	FLANGE SIZE	A	B	C	0	E	F	G	H	J MIN	J MAX	XI DRILL	K2 THD.
1933-48-48	1934-48-48	3	3	5.12	5.31	2.438	4.188	1.38	1.120	3.547	3.00	3.615	3.625	0.656	5/8-11
1933-56-56	1934-56-56	3-1/2	3-1/2	5.50	6.00	2.750	4.750	1.44	1.190	4.047	3.50	4.095	4.115	0.656	5/8-11
1933-64-64	1934-64-64	4	4	6.00	6.38	3.062	5.125	1.50	1.250	4.578	4.00	4.595	4.615	0.656	5/8-11
1933-80-80	1934-80-80	5	5	7.12	7.25	3.625	6.000	1.75	1.380	5.641	5.00	5.595	5.615	0.656	5/8-11

All items available with metric mounting holes upon request

Flat Socket Block - Pipe Code 61
1935-61 Series and 1936-61 Series

PART NO. 0-RING FACE	PART NO. FLAT FACE	PIPE SIZE	FLANGE SIZE	A	B	C	0	E	F	G	H	J MIN	J MAX	XI DRILL	K2 THD.
1935-61-08-08	1936-61-08-08	1/2	1/2	1.813	2.125	0.688	1.500	0.75	0.560	0.855	0.50	1.000	1.005	0.344	5/16-18
1935-61-12-12	1936-61-12-12	3/4	3/4	2.063	2.563	0.875	1.875	0.75	0.560	1.062	0.75	1.250	1.255	0.406	3/8-16
1935-61-16-16	1936-61-16-16	1	1	2.313	2.750	1.031	2.062	0.88	0.630	1.326	1.00	1.560	1.565	0.406	3/8-16
1935-61-20-20	1936-61-20-20	1-1/4	1-1/4	2.875	3.125	1.188	2.312	0.94	0.690	1.672	1.25	1.750	1.755	0.469	7/16-14
1935-61-24-24	1936-61-24-24	1-1/2	1-1/2	3.250	3.688	1.406	2.750	1.19	0.750	1.922	1.50	2.115	2.125	0.531	1/2-13
1935-61-32-32	1936-61-32-32	2	2	3.813	4.000	1.688	3.062	1.38	0.875	2.406	2.00	2.490	2.500	0.531	1/2-13
1935-61-40-40	1936-61-40-40	2-1/2	2-1/2	4.281	4.500	2.000	3.500	1.75	1.000	2.906	2.50	2.995	3.005	0.531	1/2-13
1935-61-48-48	1936-61-48-48	3	3	5.156	5.313	2.438	4.188	2.12	1.250	3.54/	3.00	3.615	3.625	0.656	5/8-11

All items available with metric mounting holes upon request

Flat Socket Block - Pipe Code 62
1935-62 Series and 1936-62 Series

PART NO. 0-RING FACE	PART NO. FLAT FACE	PIPE SIZE	FLANGE SIZE	A	B	C	0	E	F	6	H	J MIN	J MAX	XI DRILL	K2 THD.
1935-62-08-08	1936-62-08-08	1/2	1/2	1.94	2.30	0.718	1.594	0.57	0.560	0.855	0.50	1.000	1.005	0.344	5/16-18
1935-62-12-12	1936-62-12-12	3/4	3/4	2.38	2.81	0.937	2.000	1.25	0.560	1.063	0.75	1.250	1.255	0.406	3/8-16
1935-62-16-16	1936-62-16-16	1	1	2.75	3.19	1.093	2.250	1.50	0.630	1.328	1.00	1.560	1.565	0.469	7/16-14
1935-62-20-20	1936-62-20-20	1-1/4	1/4	3.06	3.75	1.250	2.625	1.50	0.690	1.672	1.25	1.750	1.755	0.531	1/2-13
1935-62-24-24	1936-62-24-24	1-1/2	1/2	3.75	4.44	1.437	3.125	1.75	0.750	1.922	1.50	2.115	2.125	0.656	5/8-11
1935-62-32-32	1936-62-32-32	2	2	4.50	5.25	1.750	3.812	1.75	0.875	2.406	2.00	2.490	2.500	0.781	3/4-10
1935-62-40-40	1936-62-40-40	2-1/2	1/2	5.87	6.87	2.312	4.875	2.06	1.000	2.906	2.50	2.995	3.005	0.906	7/8-9
1935-62-48-48	1936-62-48-48	3	3	7.00	8.50	2.812	6.000	2.62	1.250	3.547	3.00	3.615	3.625	1.156	11/8-7

All items available with metric mounting holes upon request

Flat Socket Block - Tube
Code 61 1937-61 Series
Code 61 1938-61 Series

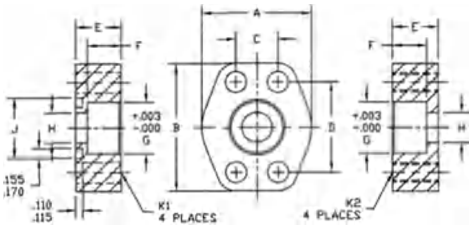

PART NO. O-RING FACE	PART NO. FIAT FACE	TUBE SIZE	FLANGE SIZE	A	B	C	0	E	F	G	H	J MIN	J MAX	K1 DRILL	K2 THD.
1937-61-12-12	1938-61-12-12	3/4	3/4	2.06	2.56	0.875	1.875	0.750	0.560	0.752	0.63	1.250	1.255	0.406	3/8-16
1937-61-16-12	1938-61-16-12	1	3/4	2.06	2.56	0.875	1.875	0.750	0.560	1.002	0.75	1.250	1.255	0.406	3/8-16
1937-61-16-16	1938-61-16-16	1	1	2.31	2.75	1.031	2.062	0.880	0.630	1.002	0.88	1.560	1.565	0.406	3/8-16
1937-61-20-16	1938-61-20-16	1-1/4	1	2.31	2.75	1.031	2.062	0.880	0.630	1.252	1.00	1.560	1.565	0.406	3/8-16
1937-61-20-20	1938-61-20-20	1-1/4	11/4	2.88	3.12	1.188	2.312	0.940	0.690	1.252	1.13	1.750	1.755	0.469	7/16-14
1937-61-24-20	1938-61-24-20	1-1/2	11/4	2.88	3.12	1.188	2.312	0.940	0.690	1.502	1.25	1.750	1.755	0.469	7/16-14
1937-61-24-24	1938-61-24-24	1-1/2	11/2	3.25	3.69	1.406	2.750	1.190	0.750	1.502	1.38	2.115	2.125	0.531	1/2-13
1937-61-28-24	1938-61-28-24	1-3/4	11/2	3.25	3.69	1.406	2.750	1.190	0.750	1.752	1.50	2.115	2.125	0.531	1/2-13
1937-61-32-32	1938-61-32-32	2	2	3.81	4.00	1.688	3.062	1.375	0.875	2.002	1.88	2.490	2.500	0.531	1/2-13
1937-61-36-32	1938-61-36-32	2-1/4	2	3.81	4.00	1.688	3.062	1.375	0.875	2.252	2.00	2.490	2.500	0.531	1/2-13

All items available with metric mounting holes upon request

Flat Socket Block - Tube
Code 62 1937-62 Series
Code 62 1938-62 Series

PART NO. 0-RING FACE	PART NO. FLAT FACE	TUBE SIZE	FLANGE SIZE	A	B	C	0	E	F	G	H	J MIN	J MAX	K1 DRILL	K2 THO.
1937-62-12-12	1938-62-12-12	3/4	3/4	2.38	2.81	0.937	2.000	1.25	0.560	0.752	0.63	1.250	1.255	0.406	3/8-16
1937-62-16-12	1938-62-16-12	1	3/4	2.38	2.81	0.937	2.000	1.25	0.560	1.002	0.75	1.250	1.255	0.406	3/8-16
1937-62-16-16	1938-62-16-16	1	1	2.75	3.19	1.093	2.250	1.50	0.630	1.002	0.88	1.560	1.565	0.469	7/16-14
1937-62-20-16	1938-62-20-16	1-1/4	1	2.75	3.19	1.093	2.250	1.50	0.630	1.252	1.00	1.560	1.565	0.469	7/16-14
1937-62-20-20	1938-62-20-20	1-1/4	1-1/4	3.06	3.75	1.250	2.625	1.50	0.690	1.252	1.13	1.750	1.755	0.531	1/2-13
1937-62-24-20	1938-62-24-20	1-1/2	1-1/4	3.06	3.75	1.250	2.625	1.50	0.690	1.502	1.25	1.750	1.755	0.531	1/2-13
1937-62-24-24	1938-62-24-24	1-1/2	1-1/2	3.75	4.44	1.437	3.125	1.75	0.750	1.502	1.38	2.115	2.125	0.656	5/8-11
1937-62-28-24	1938-62-28-24	1-3/4	1-1/2	3.75	4.44	1.437	3.125	1.75	0.750	1.752	1.50	2.115	2.125	0.656	5/8-11
1937-62-32-32	1938-62-32-32	2	2	4.50	5.25	1.750	3.812	1.75	0.875	2.002	1.88	2.490	2.500	0.781	3/4-10
1937-62-36-32	1938-62-36-32	2-1/4	2	4.50	5.25	1.750	3.812	1.75	0.875	2.252	2.00	2.490	2.500	0.781	3/4-10

All items available with metric mounting holes upon request

Flange Spacer with Side Gage Ports Code 61 1940 Series

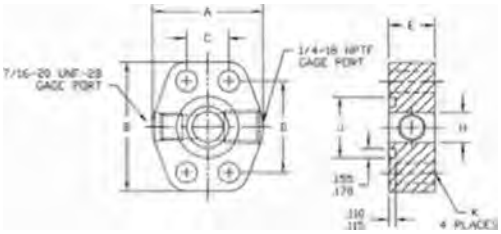

PART NO.SIZE	FLANGE SIZE	A	B	C	D	E	H	J	K DRILL
1940-61-08	1/2	1.813	2.125	0.688	1.500	1.250	0.500	1.000	0.344
1940-61-12	3/4	2.063	2.563	0.875	1.875	1.250	0.750	1.250	0.406
1940-61-16	1	2.313	2.750	1.031	2.063	0.875	1.000	1.560	0.406
1940-61-20	1-1/4	2.875	3.125	1.188	2.313	0.937	1.250	1.750	0.469
1940-61-24	1-1/2	3.250	3.688	1.406	2.750	1.188	1.500	2.115	0.531
1940-61-32	2	3.813	4.000	1.688	3.063	1.375	2.000	2.490	0.531
1940-61-40	2-1/2	4.281	4.500	2.000	3.500	1.750	2.500	2.995	0.531
1940-61-48	3	5.156	5.313	2.438	4.188	2.125	3.000	3.615	0.656

Flange Spacer with Side Gage Ports Code 62 1940 Series

PART NO.SIZE	FLANGE SIZE	A	B	C	0	E	H	J	K DRILL
1940-62-08	1/2	1.940	2.300	0.718	1.594	0.870	0.500	1.000	0.344
1940-62-12	3/4	2.500	2.950	0.937	2.000	1.250	0.750	1.250	0.406
1940-62-16	1	2.750	3.190	1.093	2.250	1.500	1.000	1.560	0.492
1940-62-20	1-1/4	3.060	3.750	1.250	2.625	1.500	1.250	1.750	0.531
1940-62-24	1-1/2	3.750	4.440	1.437	3.125	1.750	1.500	2.115	0.656
1940-62-32	2	4.500	5.250	1.750	3.812	1.750	2.000	2.490	0.781
1940-62-40	2-1/2	5.870	6.870	2.312	4.875	2.060	2.500	2.995	0.906
1940-62-48	3	7.000	8.500	2.812	6.000	2.620	3.000	3.615	1.156

Hydraulic Flanges & Accessories

Plug Block
Code 61 1942-61 Series
Code 61 1943-61 Series

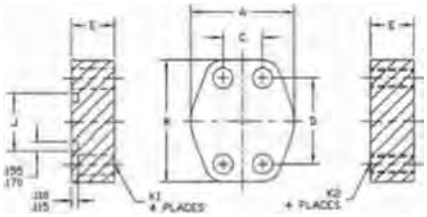

PART NO. O-RING FACE	PART NO. FIAT FACE	FLANGE SIZE	A	B	C	0	E	J MIN	J MAX	K1 DRILL	K2 THD.
1942-61-08	1943-61-08	1/2	1.813	2.125	0.688	1.500	0.690	1.000	1.005	0.344	5/16-18
1942-61-12	1943-61-12	3/4	2.063	2.563	0.875	1.875	0.750	1.250	1.255	0.406	3/8-16
1942-61-16	1943-61-16	1	2.313	2.750	1.031	2.063	0.880	1.560	1.565	0.406	3/8-16
1942-61-20	1943-61-20	1-1/4	2.875	3.125	1.188	2.313	0.940	1.750	1.755	0.469	7/16-14
1942-61-24	1943-61-24	1-1/2	3.250	3.688	1.406	2.750	1.190	2.115	2.125	0.531	1/2-13
1942-61-32	1943-61-32	2	3.813	4.000	1.688	3.063	1.380	2.490	2.500	0.531	1/2-13
1942-61-40	1943-61-40	2-1/2	4.281	4.500	2.000	3.500	1.750	2.995	3.005	0.531	1/2-13
1942-61-48	1943-61-48	3	5.156	5.313	2.438	4.188	2.120	3.615	3.625	0.656	5/8-11

All items available with metric mounting holes upon request.

Plug Block
Code 62 1942-62 Series
Code 62 1943-62 Series

PART NO. O-RING FACE	PART NO. FLAT FACE	FLANGE SIZE	A	B	C	0	E	J MIN	J MAX	K1 DRILL	K2 THD.
1942-62-12	1943-62-12	3/4	2.380	2.810	0.937	2.000	1.250	1.250	1.255	0.406	3/8-16
1942-62-16	1943-62-16	1	2.750	3.190	1.093	2.250	1.500	1.560	1.565	0.469	7/16-14
1942-62-20	1943-62-20	1-1/4	3.060	3.750	1.250	2.625	1.500	1.750	1.755	0.531	1/2-13
1942-62-24	1943-62-24	1-1/2	3.750	4.440	1.437	3.125	1.750	2.115	2.125	0.656	5/8-11
1942-62-32	1943-62-32	2	4.500	5.250	1.750	3.812	1.750	2.490	2.500	0.781	3/4-10

All items available with metric mounting holes upon request.

Split Flange
Code 61 1951 Series

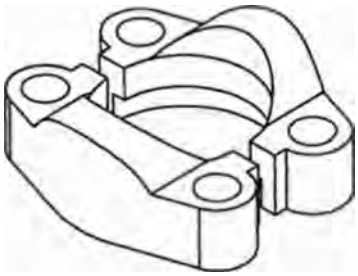

PART NO.SIZE	FLANGE SIZE
1951-08	1/2
1951-12	3/4
1951-16	1
1951-20	1-1/4
1951-24	1-1/2
1951-32	2
1951-40	2-1/2
1951-48	3
1951-56	3-1/2
1951-64	4

All items available with metric mounting holes upon request.

Flange Halves
Code 61 1951-H Series

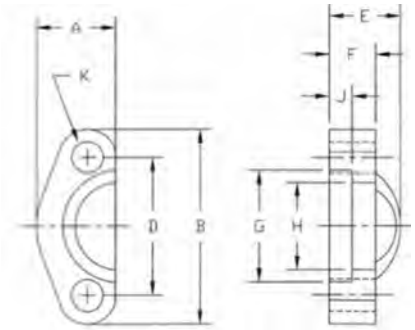

'PART NO.SIZE	"FLANGE KIT	FLANGE SIZE	A ±.030	0 ±.030	0 ±.010	E ±.030	F ±.01G	G ±.010	H ±.010	J ±.005	K ±.005
1951-08-H	1901-08-K	1/2	0.86	2.12	1.50	0.75	0.50	1.22	0.96	0.25	0.34
1951-12-H	1901-12-K	3/4	0.98	2.56	1.88	0.88	0.56	1.53	1.27	0.25	0.41
1951-16-H	1901-16-K	1	1.11	2.75	2.06	0.94	0.62	1.78	1.52	0.30	0.41
1951-20-H	1901-20-K	1-1/4	1.39	3.12	2.31	0.88	0.56	2.03	1.72	0.30	0.47
1951-24-H	1901-24-K	1-1/2	1.58	3.69	2.75	1.00	0.62	2.41	2.00	0.30	0.53
1951-32-H	1901-32-K	2	1.86	4.00	3.06	1.03	0.62	2.84	2.47	0.36	0.53
1951-40-H	1901-40-K	2-1/2	2.09	4.50	3.50	1.50	0.75	3.34	2.95	0.36	0.53
1951-48-H	1901-48-K	3	2.53	5.31	4.19	1.62	0.88	4.03	3.58	0.36	0.66
1951-56-H	1901-56-K	3-1/2	2.70	6.00	4.75	1.12	0.88	4.53	4.03	0.42	0.66
1951-64-H	1901-64-K	4	2.95	6.38	5.13	1.38	1.00	5.03	4.53	0.42	0.66

'Part No.:l split flange half only.

* * Flange Kit:2 split flange halves. 4 hex head bolls. 4 lock washers, and I Buna-N o-ring.

All items available with metric mounting upon request.

Hydraulic Flanges & Accessories

Split Flange
Code 62 1952 Series

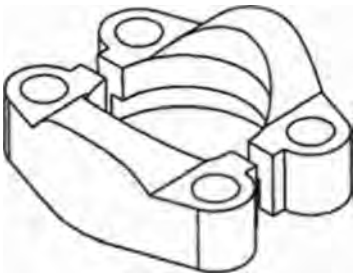

PART NO.SIZE	FLANGE SIZE
1952-08	1/2
1952-12	3/4
1952-16	1
1952-20	1-1/4
1952-24	1-1/2
1952-32	2

All items available with metric mounting holes upon request.

D-022

Flange Halves
Code 62 1952-H Series

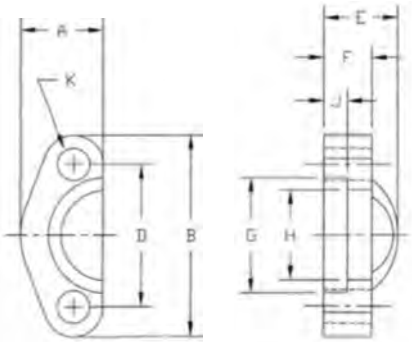

•PART NO.SIZE	"FLANGE KIT	FLANGE SIZE	A ±.030	B ±.030	0 ±.010	E ±.030	F ±.016	G ±.010	H ±.010	J ±.005	K ±.005
1952-08-H	1902-08-K	1/2	0.89	2.22	1.59	0.88	0.62	1.28	0.97	0.29	0.34
1952-12-H	1902-12-K	3/4	1.14	2.81	2.00	1.12	0.75	1.66	1.28	0.33	0.41
1952-16-H	1902-16-K	1	1.33	3.19	2.25	1.31	0.94	1.91	1.53	0.36	0.47
1952-20-H	1902-20-K	1-1/4	1.48	3.75	2.63	1.50	1.06	2.16	1.75	0.39	0.53
1952-24-H	1902-24-K	1-1/2	1.83	4.44	3.13	1.69	1.19	2.53	2.03	0.48	0.66
1952-32-H	1902-32-K	2	2.20	5.25	3.81	2.06	1.44	3.16	2.66	0.48	0.78

* Part No.: 1 split flange half only.

•Flange Kit:2 split flange halves, 4 hex head bolts, 4 lock washers, and 1 Buna-N o-ring.

All items available with metric mounting upon request.

Pipe Saddle Weld Block Connector
1959-P Series

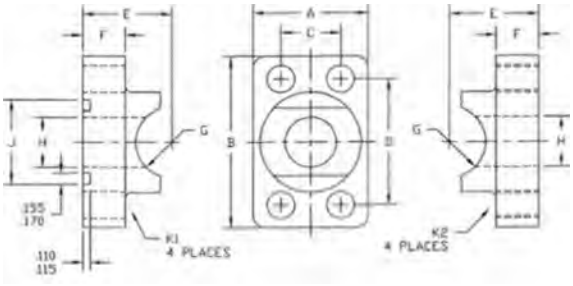

D-023

PART NO. 0-RING FACE	PART NO. FIAT FACE	PIPE SIZE	FLANGE SIZE	A	B	C	0	E	F	G	H	J MIN	J MAX	K1 DRILL	K2 THO.
1959-P-12-12	1960-P-12-12	3/4	3/4	1.690	2.560	0.875	1.875	1.310	0.630	0.532	0.750	1.250	1.255	0.406	3/8-16
1959-P-16-16	1960-P-16-16	1	1	1.940	2.750	1.031	2.062	1.500	0.560	0.665	1.000	1.560	1.565	0.406	3/8-16
1959-P-20-20	1960-P-20-20	1-1/4	1-1/4	2.190	3.120	1.188	2.312	1.810	0.630	0.837	1.250	1.750	1.755	0.469	7/16-14
1959-P-24-24	1960-P-24-24	1-1/2	1-1/2	2.560	3.690	1.406	2.750	2.120	0.810	0.957	1.500	2.115	2.125	0.531	1/2-13
1959-P-32-32	1960-P-32-32	2	2	3.060	4.000	1.688	3.062	2.620	1.060	1.200	2.000	2.490	2.500	0.531	1/2-13

Grade 8 Flange Bolts
1961 Series

PART NO.SIZE	FLANGE SIZE
1961-08	1/2
1961-12	3/4
1961-16	1
1961-20	1-1/4
1961-24	1-1/2
1961-32	2
1961-40	2-1/2
1961-48	3
1961-56	3-1/2
1961-64	4

Grade 8 Flange Bolts
1962 Series

PART NO.SIZE	FLANGE SIZE
1962-08	1/2
1962-12	3/4
1962-16	1
1962-20	1-1/4
1962-24	1-1/2
1962-32	2

Lock Washers
1971 Series

PART NO.SIZE	FLANGE SIZE
1971-08	1/2
1971-12	3/4
1971-16	1
1971-20	1-1/4
1971-24	1-1/2
1971-32	2
1971-40	2-1/2
1971-48	3
1971-56	3-1/2
1971-64	4

Lock Washers
1972 Series

PART NO.SIZE	FLANGE SIZE
1972-08	1/2
1972-12	3/4
1972-16	1
1972-20	1-1/4
1972-24	1-1/2
1972-32	2

Hydraulic Flanges & Accessories

SAE Port Block Elbow Code 61 1965 Series

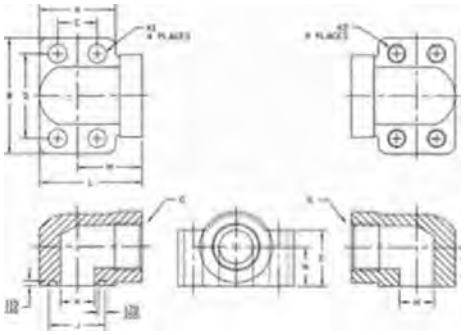

D-024

PART NO. O-RING FACE	PART NO. FLAT FACE	TUBE SIZE	FLANGE SIZE	A	B	C	0	E	G THREAD	H	J	K1 DRILL	K2 THD.	L	M	N
1965-61-12-12	1966-61-12-12	3/4	3/4	1.690	2.560	0.875	1.875	1.250	1-1/16-12	0.750	1.250	0.406	3/8-16	2.280	1.440	0.875
1965-61-16-16	1966-61-16-16	1	1	1.940	2.750	1.031	2.062	1.500	1-5/16-12	1.000	1.560	0.406	3/8-16	2.620	1.660	1.062
1965-61-20-20	1966-61-20-20	1-1/4	1-1/4	2.190	3.120	1.188	2.312	1.810	1-5/8-12	1.250	1.750	0.469	7/16-14	3.000	1.910	1.188
1965-61-24-24	1966-61-24-24	1-1/2	1-1/2	2.560	3.690	1.406	2.750	2.000	1-7/8-12	1.500	2.115	0.531	1/2-13	3.330	2.050	1.312
1965-61-32-32	1966-61-32-32	2	2	3.060	4.330	1.688	3.062	2.500	2-1/2-12	2.000	2.490	0.531	1/2-13	3.810	2.280	1.656

SAE Port Block Elbow Code 62 1965 Series

PART NO. 0-RING FACE	PART NO. FLAT FACE	TUBE SIZE	FLANGE SIZE	A	B	C	0	E	G THREAD	H	J	K1 DRILL	K2 THD.	I	M	N
1965-62-12-12	1966-62-12-12	3/4	3/4	1.940	2.750	0.937	2.000	1.500	1-1/16-12	0.750	1.250	0.406	3/8-16	2.620	1.660	1.062
1965-62-16-16	1966-62-16-16	1	1	2.190	3.120	1.093	2.250	1.810	1-5/16-12	1.000	1.560	0.492	7/16-14	3.000	1.910	1.188
1965-62-20-20	1966-62-20-20	1-1/4	1-1/4	2.560	3.690	1.250	2.625	2.000	1-5/8-12	1.250	1.750	0.531	1/2-13	3.320	2.050	1.312
1965-62-24-24	1966-62-24-24	1-1/2	1-1/2	3.060	4.330	1.437	3.125	2.500	1-7/8-12	1.500	2.115	0.656	5/8-11	3.810	2.280	1.656

NPTF Port Block Elbow Code 61 1967 Series

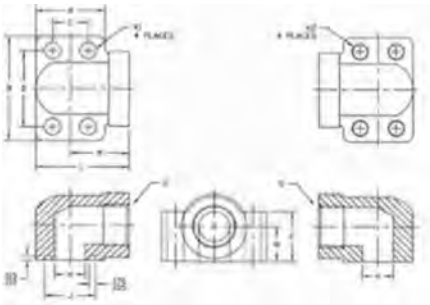

PART NO. O-RING FACE	PART NO. FLAT FACE	PIPE SIZE	FLANGE SIZE	A	B	C	D	E	G THREAD	H	J	K1 DRILL	K2 THO.	L	M	N
1967-61-12-12	1968-61-12-12	3/4	3/4	1.690	2.560	0.875	1.875	1.250	3/4-14	0.750	1.250	0.406	3/8-16	2.280	1.440	0.875
1967-61-16-16	1968-61-16-16	1	1	1.940	2.750	1.031	2.062	1.500	1-11-1/2	1.000	1.560	0.406	3/8-16	2.620	1.660	1.062
1967-61-20-20	1968-61-20-20	1-1/4	1-1/4	2.190	3.120	1.188	2.312	1.810	1-1/4-11 1/2	1.250	1.750	0.469	7/16-14	3.000	1.910	1.188
1967-61-24-24	1968-61-24-24	1-1/2	1-1/2	2.560	3.690	1.406	2.750	2.000	1-1/2-11 1/2	1.500	2.115	0.531	1/2-13	3.330	2.050	1.312
1967-61-32-32	1968-61-32-32	2	2	3.060	4.330	1.688	3.062	2.500	2-11-1/2	2.000	2.490	0.531	1/2-13	3.810	2.280	1.656

NPTF Port Block Elbow
Code 62 1967 Series

PART NO. 0-RING FACE	PART NO. FLAT FACE	PIPE SIZE	FLANGE SIZE	A	B	C	0	E	G THREAD	H	J	K1 DRILL	K2 THD.	L	M	N
1967-62-12-12	1968-62-12-12	3/4	3/4	1.940	2.750	0.937	2.000	1.500	3/4-14	0.750	1.250	0.406	3/8-16	2.620	1.660	1.062
1967-62-16-16	1968-62-16-16	1	1	2.190	3.120	1.093	2.250	1.810	1-11-1/2	1.000	1.560	0.492	7/16-14	3.000	2.000	1.188
1967-62-20-20	1968-62-20-20	1-1/4	1-1/4	2.560	3.690	1.250	2.625	2.000	1-1/4-11 1/2	1.250	1.750	0.531	1/2-13	3.320	2.050	1.312
1967-62-24-24	1968-62-24-24	1-1/2	1-1/2	3.060	4.330	1.437	3.125	2.500	1-1/2-11 1/2	1.500	2.115	0.656	5/8-11	3.810	2.280	1.656

Flange Shipping Plate/ 0-PSI
Code 61 1979 Series

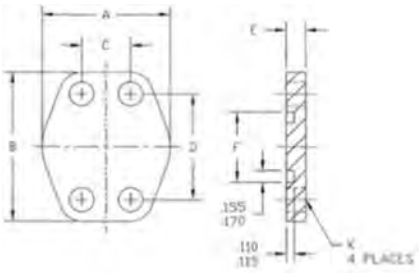

PART NO.	SIZE	FLANGE SIZE	A	B	C	0	E	F	K DRILL
1979-61-12		3/4	2.060	2.560	0.875	1.875	0.330	1.250	0.406
1979-61-20		1-1/4	2.880	3.120	1.188	2.313	0.330	1.750	0.469
1979-61-32		2	3.810	4.000	1.688	3.063	0.330	2.490	0.531
1979-61-48		3	5.160	5.310	2.438	4.188	0.330	3.615	0.656

'Other sizes available upon request

Flange Shipping Plate/0-PSI
Code 62 1979 Series

PART NO.	SIZE	FLANGE SIZE	A	B	C	0	E	F	K DRILL
1979-62-12		3/4	2.500	2.810	0.937	2.000	0.330	1.250	0.406
1979-62-20		1-1/4	3.060	3.750	1.250	2.625	0.330	1.750	0.531
1979-62-32		2	4.500	5.250	1.750	3.812	0.330	2.490	0.781

'Other sizes available upon request

Hydraulic Flanges & Accessories

Socket Head Mounting Kit Code 61 1990-61 Series

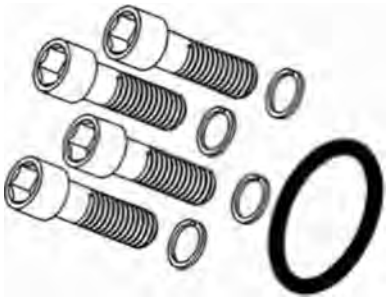

D-026

PART NO. SIZE	FLANGE SIZE
1990-61-08-K	1/2
1990-61-12-K	3/4
1990-61-16-K	1
1990-61-20-K	1-1/4
1990-61-24-K	1-1/2
1990-61-32-K	2
1990-61-40-K	2-1/2
1990-61-48-K	3
1990-61-56-K	3-1/2
1990-61-64-K	4

Socket Head Mounting Kit Code 62 1990-62 Series

PART NO. SIZE	FLANGE SIZE
1990-62-08-K	1/2
1990-62-12-K	3/4
1990-62-16-K	1
1990-62-20-K	1-1/4
1990-62-24-K	1-1/2
1990-62-32-K	2

Mounting Kit:4 socket head bolts, 4 lock washers, and 1 Buna-N 0-Ring

Socket Head Mounting Kit Metric 1990-M Series

PART NO. SIZE
1990-M08-K
1990-M10-K
1990-MI 2-K
1990-M16-K
1990-M20-K
1990-M24-K
1990-M30-K

Mounting Kit:4 socket head bolts, 4 lock washers, and 1 Buna-N 0-Ring

Tube Braze Flange Head Connector Code 61 3300-61 Series Code 61 3301-61 Series

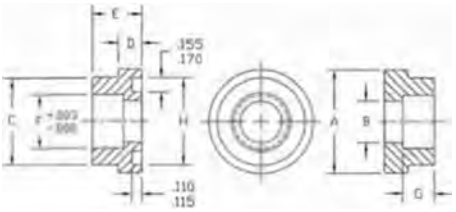

D-027

PART NO. 0-RING FACE	PART NO. FIAT FACE	TUBE SIZE	FLANGE SIZE	A	B	C	B	E	F	G	H
3300-61-08-08	330161-0868	1/2	1/2	1.188	0.406	1.00	0.265	0.50	0.502	0.312	1.000
330081-10-08	330161-1008	5/8	1/2	1.188	0.500	1.00	0.235	0.50	0.625	0.312	1.000
3300-61-12-12	330161-12-12	3/4	3/4	1.500	0.656	1.25	0.265	0.56	0.752	0.375	1.250
3300-61-16-12	3301-61-16-12	1	3/4	1.500	0.750	1.25	0.265	0.56	0.100	0.375	1.250
330061-16-16	3301-61-16-16	1	1	1.750	0.906	1.50	0.315	0.56	1.002	0.375	1.560
330061-20-16	330161-20-16	1-1/4	1	1.750	1.000	1.50	0.315	0.56	1.252	0.375	1.560
3300-61-20-20	330161-20-20	1-1/4	1-1/4	2.000	1.125	1.70	0.315	0.56	1.252	0.375	1.750
330061-24-20	330161-24-20	1-1/2	1-1/4	2.000	1.250	1.70	0.315	0.56	1.502	0.375	1.750
3300-61-24-24	330161-24-24	1-1/2	1-1/2	2.380	1.375	1.98	0.315	0.62	1.502	0.438	2.115
330061-28-24	3301-61-2824	1-3/4	1-1/2	2.380	1.500	1.98	0.315	0.62	1.752	0.438	2.115
330061-32-32	3301-61-32-32	2	2	2.810	1.875	2.45	0.315	0.62	2.002	0.500	2.490
330061-36-32	3301-61-3832	2-1/4	2	2.810	2.000	2.45	0.375	0.62	2.252	0.500	2.490
330061-40-40	3301-61-4040	2-1/2	2-1/2	3.312	2.375	2.92	0.375	0.68	2.502	0.500	2.995
330061-44-40	3301-61-4440	2-3/4	2-1/2	3.312	2.500	2.92	0.375	0.68	2.752	0.500	2.995
330061-48-48	3301-614848	3	3	4.000	2.875	3.55	0.375	0.75	3.002	0.562	3.615

Tube Braze Flange Head Connector Code 62 3300-62 Series Code 62 3301-62 Series

PARTNB. 0-RIN6 FACE	PARTNB. FIAT FACE	TUBE SIZE	FLANGE SIZE	A	B	C	B	E	F	G	H
3300-62-12-12	330182-12-12	3/4	3/4	1.625	0.656	1.250	0.345	0.69	0.752	0.500	1.250
3300-62-1812	330182-1812	1	3/4	1.625	0.750	1.250	0.345	0.69	1.002	0.500	1.250
3300-62-1816	330182-1816	1	1	1.875	0.810	1.500	0.375	0.81	1.002	0.625	1.560
330082-2816	330182-2816	1-1/4	1	1.875	1.000	1.500	0.375	0.81	1.252	0.625	1.560
330082-2820	330182-2820	1-1/4	1-1/4	2.125	1.010	1.718	0.405	1.00	1.252	0.812	1.750
330082-24-20	330182-24-20	1-1/2	1-1/4	2.125	1.250	1.718	0.405	1.00	1.502	0.812	1.750
330082-24-24	3301-62-24-24	1-1/2	1-1/2	2.500	1.250	2.000	0.495	1.19	1.502	1.000	2.115
330082-2824	330182-2824	1-3/4	1-1/2	2.500	1.500	2.000	0.495	1.19	1.752	1.000	2.115
330082-32-32	330182-32-32	2	2	3.125	1.750	2.000	0.495	1.50	2.002	1.375	2.490
330082-3832	3301-62-3832	2-1/4	2	3.125	2.000	2.000	0.495	1.50	2.252	1.312	2.490

Hydraulic Flanges & Accessories

Flange Head Detail Code 61

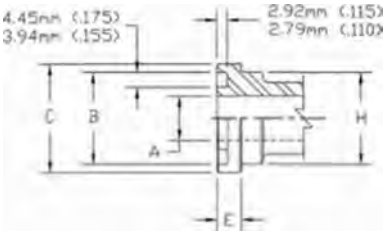

FLANGE SIZE	DASH SIZE	A MAX (in.)	A MAX (mm)	B (In.)	B (mm)	C±.010 (in.)	C±0.25 (mm)	E±.005 (in.)	E±0.13 (mm)	H MAX (in.)	H MAX (mm)
1/2	-8	0.50	13	1.005-1.000	25.53-25.40	1.188	30.18	0.265	6.73	0.94	24
3/4	-12	0.75	19	1.255-1.250	31.88-31.75	1.500	38.10	0.265	6.73	1.25	32
1	-16	1.00	25	1.565-1.560	39.75-39.62	1.750	44.45	0.315	8.00	1.50	38
1-1/4	-20	1.25	32	1.755-1.750	44.58-44.45	2.000	50.80	0.315	8.00	1.70	43
1-1/2	-24	1.50	38	2.125-2.115	53.9853.72	2.375	60.33	0.315	8.00	1.98	50
2	-32	2.00	51	2.500-2.490	63.50-63.25	2.812	71.42	0.375	9.53	2.45	62
2-1/2	-40	2.50	64	3.005-2.995	76.33-76.07	3.312	84.12	0.375	9.53	2.92	74
3	-48	3.00	76	3.625-3.615	92.08-91.82	4.000	101.60	0.375	9.53	3.55	90
3-1/2	-56	3.50	89	4.115-4.095	104.52-104.01	4.500	114.30	0.422	11.23	4.00	102
4	-64	4.00	102	4.6154.595	117.22-116.71	5.000	127.00	0.422	11.23	4.50	114

Flange Head Detail Code 62

FLANGE SIZE	DASH SIZE	A MAX (in.)	A MAX (mm)	B (in.)	B (mm)	C±.010 (in.)	C±0.25 (mm)	E±.0D5 (in.)	E+0.13 (mm)	H MAX (in.)	H MAX (mm)
1/2	-8	0.50	13	1.005-1.000	25.53-25.40	1.250	31.75	0.305	7.75	0.94	24
3/4	-12	0.75	19	1.255-1.250	31.88-31.75	1.625	41.28	0.345	8.76	1.25	32
1	-16	1.00	25	1.565-1.560	39.75-39.62	1.875	47.63	0.375	9.53	1.50	38
1-1/4	-20	1.25	32	1.755-1.750	44.58-44.45	2.125	53.98	0.405	10.29	1.72	44
1-1/2	-24	1.50	38	2.125-2.115	53.98-53.72	2.500	63.50	0.495	12.57	2.00	51
2	-32	2.00	51	2.500-2.499	63.50-63.25	3.125	79.38	0.495	12.57	2.62	67

SAE J518 Maximum Working Pressure Ratings
for Code 61 Flange Fittings

NOMINAL FLANGE SIZE INCH	MAXIMUM RECOMMENDED WORKING PRESSURE MPa	MAXIMUM RECOMMENDED WORKING PRESSURE PSI*
1/2	34.5	5,000
3/4	34.5	5,000
1	34.5	5,000
1-1/4	27.6	4,000
1-1/2	20.7	3,000
2	20.7	3,000

MPa(Mega Paskels)-1MPa=145 PSI

SAE J518 Maximum Working Pressure Ratings
for Code 62 Flange Fittings

NOMINAL FLANGE SIZE INCH	MAXIMUM RECOMMENDED WORKING PRESSURE MPa	MAXIMUM RECOMMENDED WORKING PRESSURE PSI*
1/2	41.4	6,000
3/4	41.4	6,000
1	41.4	6,000
1-1/4	41.4	6,000
1-1/2	41.4	6,000
2	41.4	6,000

MPa(Mega Paskels)-1 MPa= 145 PSI

*Pressure ratings for flange head only

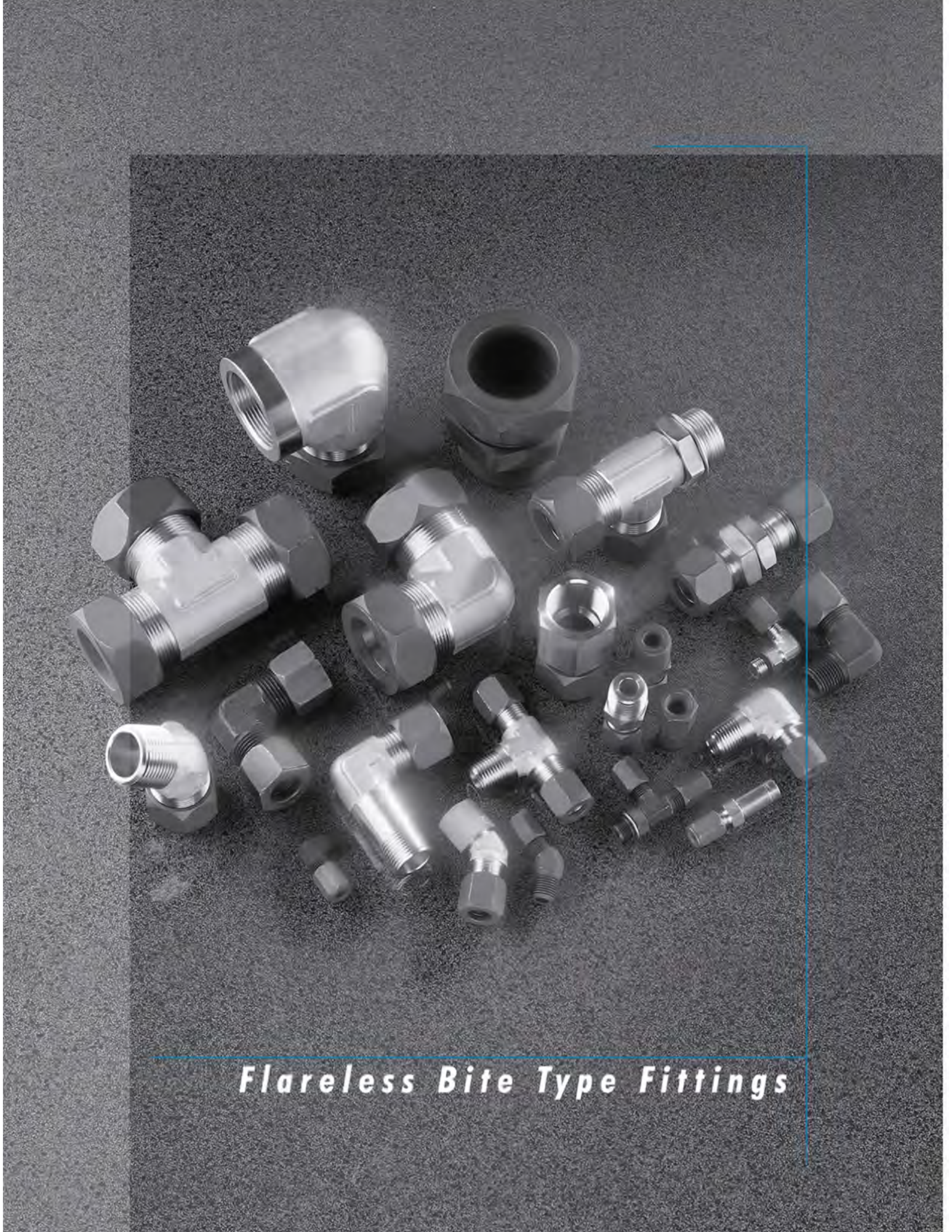

Flareless Bite Type Fittings

Flareless Bite Type Fittings

Brennan Industries, Inc.'s steel and stainless steel bite type fittings meet all design and performance requirements for hydraulic flareless tube fittings in Standard J514 published by the Society of Automotive Engineers (SAE).

E-001

(080112/MS#51590) E-003 **C0304-C** Cap Nut	(080110/MS#51823) E-003 **C0318** Nut	(080115A/MS#51825A) E-004 **C0319** Ferrule	E-004 **C2402** BT-MJ	(080101/MS#51814) E-005 **C2403** BT-BT Tube Union Straight	(080119/MS#51856) E-005 **C2403-LH** BT-BT Tube Union Large Hex Straight
(080102/MS#51819) E-006 **C2404** BT-MP Adapter Straight	(080103) E-007 **C2405** BT-FP Adapter Straight	(080123) E-007 **C2406** Tube-BT Reducer	(080109) E-008 **C2408** Plug BT	(080201/MS#51820) E-008 **C2500** BT-BT Elbow 90°	(080202/MS#51815) E-009 **C2501** BT-MP Elbow 90°
(071502) E-009 **C2501-L** BT-MP Elbow 90° Long	(081602) E-010 **C2501-LL** BT-MP Elbow 90° X-Long	(080203/MS#51813) E-010 **C2502** BT-FP Elbow 90°	(080302/MS#51817) E-011 **C2503** BT-MP Elbow 45°	E-011 **C2504** BT-BT Elbow 45°	(080425/MS#51818) E-012 **C2601** BT-BT-MP Tee
(080427/MS#51821) E-012 **C2602** BT-BT-FP Tee	(080401/MS#51811) E-013 **C2603** BT-BT-BT Tee	(080424/MS#51824) E-013 **C2605** BT-MP-BT Tee	(080426/MS#51822) E-014 **C2606** BT-FP-BT Tee	(080501/MS#51894) E-014 **C2650** BT-BT-BT-BT Cross	(080601) E-015 **C2700** BT-BT Bulkhead Union
(080701/MS#51855) E-015 **C2701** BT-BT Bulkhead Union 90°	(080801) E-016 **C2702** BT-BT Bulkhead Union 45°	(080959) E-016 **C2703** BT-BT-BT Bulkhead Branch Tee	(080958) E-016 **C2704** BT-BT-BT Bulkhead Run Tee	E-017 **C2706** MP-BT Bulkhead	E-017 **C2707** BT-MJ Bulkhead
(080120/MS#51843) E-018 **C6400-0** BT-MORB	E-018 **C6400-L-0** BT-MORB Long	(080221/MS#51852) E-019 **C6500** BT-BTS 90°	(080321) E-019 **C6502** BT-BTS 45°	(080433/MS#51853) E-019 **C6600** BT-BT-BTS Tee	(080432/MS#51854) E-020 **C6602** BT-BTS-BT Tee
(080220/MS#51539) E-020 **C6801-NWO** BT-MAORB 90°	(080320/MS#51842) E-021 **C6802-NWO** BT-MAORB 45°	(080429/MS#51841) E-021 **C6803-NWO** BT-BT-MAORB Tee	(080428/MS#51892) E-021 **C6804-NWO** BT-MAORB-BT Tee		

Flareless Bite Type Fittings

Assembly instructions

The assembly of Brennan Steel and Stainless Steel Bite-Type Fittings involves four steps:

1)cutting, deburring and cleaning;2) pre-setting the ferrule to the tubing;3) ferrule bite inspection; and 4) installation

Cutting, Deburring & Cleaning

1. Square-cut the seamless or welded-and-drawn tubing using a hacksaw with a fine-tooth blade, or a circular-toothed cut-off saw. Use only tubing that is fully annealed for bending and flaring.
2. Remove all burrs and sharp edges on the tube by lightly deburring the I.D. and O.D. Emery paper may be used to perform this task.
3. Wipe the tube end completely with a clean cloth. Be sure to remove all metal chips from the tube end.

Pre-Setting Ferrule to the Tubing

This procedure must be followed to ensure the proper location of the ferrule to the tubing.

1. Lubricate the fitting body thread and the thread of the nut.
2. Slip the nut and ferrule over the deburred end of the tube. The long, straight end of the ferrule must point toward the deburred tube end.
3. Lubricate the ferrule.
4. Position the deburred tube end squarely on the shoulder of the fitting body.
5. Manually screw the nut onto the fitting body until it is finger-tight.
6. Put a reference mark on the nut and the tube.
7. Hold the tube firmly on the fitting body and tighten the nut an additional 1-3/4 turns. Proper assembly of bite-type fittings is dependent upon the ferrule traveling a prescribed distance into the fitting throat. This allows it to “bite" into the tube, creating a strong grip and seal.
8. The use of a Ferulset tool is recommended for sizes -08 through -32.

Ferrule Bite Inspection

The following inspection procedures must be completed prior to final assemble.

1. Disassemble the fitting.
2. The tube surface must have a raised ridge of metal that is at least 50% of the thickness of the leading edge of the ferrule.
3. There must be a slight bow to the pilot section of the ferrule.
4. The tail of the ferrule should be snug against the tube.
5. A slight indentation around the deburred end of the tube indicates that the tube was bottomed in the fitting. If this indentation is not visible, the ferrule may not be properly seated.
6. Do not rotate the ferrule.

Installation

1. Finger-tighten the nut.
2. Wrench-tighten the nut another 1/3 to 1/2 turn

Cap Nut
C0304-C Series

SAE# 080112 / MS# 51590

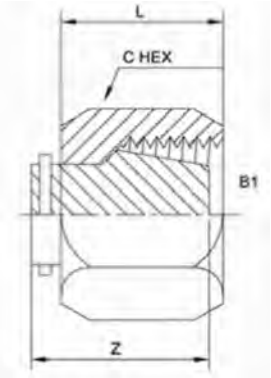

C0304-C-02	1/8	5/16-24	0.53	0.58	0.375
C0304-C-04	1/4	7/16-20	0.70	0.72	0.562
C0304-C-05	5/16	1/2-20	0.72	0.74	0.625
C0304-C-06	3/8	9/16-18	0.75	0.77	0.688
C0304-C-08	1/2	3/4-16	0.84	0.93	0.875
C0304-C-10	5/8	7/8-14	0.92	0.94	1.000
C0304-C-12	3/4	1-1/16-12	0.97	0.93	1.250
C0304-C-16	1	1-5/16-12	1.05	1.08	1.500
C0304-C-20	1-1/4	1-5/8-12	1.05	1.19	2.000

Nut
C0318 Series

SAE# 080110 / MS# 51823

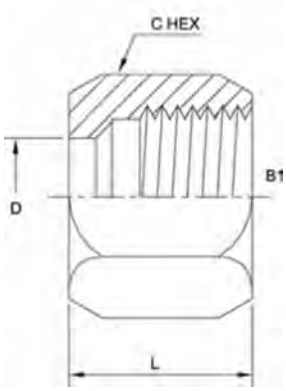

C0318-02	1/8	5/16-24	0.53	0.130	0.375
C0318-03	3/16	3/8-24	0.61	0.193	0.438
C0318-04	1/4	7/16-20	0.70	0.255	0.562
C031805	5/16	1/2-20	0.72	0.318	0.625
C031806	3/8	9/16-18	0.75	0.380	0.688
C0318-08	1/2	3/4-16	0.84	0.505	0.875
C0318-10	5/8	7/8-14	0.92	0.631	1.000
C0318-12	3/4	1-1/16-12	0.97	0.756	1.250
C0318-14	7/8	1-3/16-12	1.00	0.881	1.375
C0318-16	1	1-5/16-12	1.05	1.006	1.500
C0318-20	1-1/4	1-5/8-12	1.05	1.260	2.000
C0318-24	1-1/2	1-7/8-12	1.03	1.510	2.250
C0318-32	2	2-1/2-12	1.12	2.014	2.875

Flareless Bite Type Fittings

Ferrule
C0319 Series

SAE# 0 8 0 1 1 5A / MS# 51825A

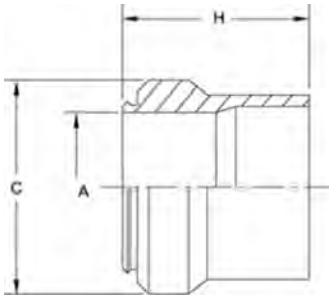

PART NO.SIZE	TUBE O.D.	A	C	H
C0319-02	1/8	0.130	0.237	0.288
C0319-03	3/16	0.193	0.307	0.329
C0319-04	1/4	0.255	0.367	0.363
C0319-05	5/16	0.318	0.430	0.367
C0319-06	3/8	0.380	0.492	0.393
C0319-08	1/2	0.505	0.663	0.429
C0319-10	5/8	0.631	0.780	0.442
C0319-12	3/4	0.756	0.925	0.475
C0319-14	7/8	0.881	1.040	0.475
C0319-16	1	1.006	1.187	0.475
C0319-20	1-1/4	1.260	1.446	0.475
C0319-24	1-1/2	1.510	1.694	0.475
C0319-32	2	2.014	2.210	0.509

BT-MJ
C2402 Series

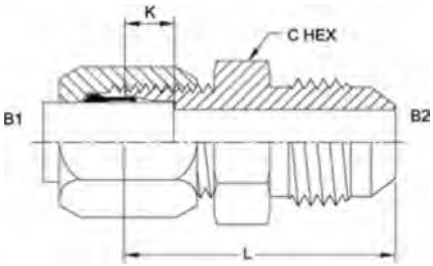

PART NO.SIZE	TUBE O.D.	B1 THREAD	B2 THREAD	B1 DRILL	B2 DRILL	L LGTH	K DEPTH	C HEX
C2402-04-04	1/4	7/16-20	7/16-20	0.203	0.172	1.23	0.234	0.500
C2402-06-06	3/8	9/16-18	9/16-18	0.281	0.297	1.28	0.250	0.625
C2402-08-08	1/2	3/4-16	3/4-16	0.422	0.391	1.47	0.305	0.812
C2402-08-12	1/2	3/4-16	1-1/16-12	0.422	0.609	1.68	0.305	1.125
C2402-12-12	3/4	1-1/16-12	1-1/16-12	0.656	0.609	1.94	0.350	1.125
C2402-16-16	1	1-5/16-12	1-5/16-12	0.875	0.844	1.98	0.415	1.375
C2402-20-20	1-1/4	1-5/8-12	1-5/8-12	1.093	1.078	2.11	0.415	1.688

BT-BT Tube Union Straight C2403 Series

SAE# 080101 / MS# 51814

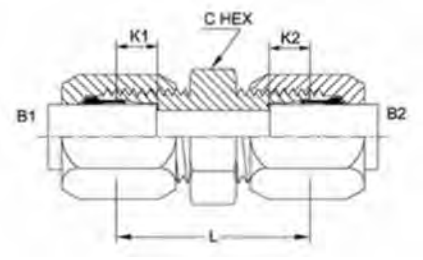

PART NO.SIZE	TUBE O.D.	B1 THREAD	B2 THREAD	B1 DRILL	B2 DRILL	L LGTH	K1 DEPTH	K2 DEPTH	C HEX
C2403-02-02	1/8	5/16-24	5/16-24	0.093	0.093	1.02	0.188	0.188	0.438
C2403-03-03	3/16	3/8-24	3/8-24	0.125	0.125	1.11	0.234	0.234	0.438
C2403-04-04	1/4	7/16-20	7/16-20	0.203	0.203	1.18	0.234	0.234	0.500
C2403-05-05	5/16	1/2-20.	1/2-20.	0.234	0.234	1.18	0.250	0.250	0.562
C2403-06-04	3/8 1/4	9/16-18	7/16-18	0.281	0.203	1.22	0.250	0.234	0.625
C2403-06-06	3/8	9/16-18	9/16-18	0.281	0.281	1.24	0.250	0.250	0.625
C2403-08-08	1/2	3/4-16	3/4-16	0.422	0.422	1.42	0.305	0.305	0.812
C2403-10-10	5/8	7/8-14	7/8-14	0.500	0.500	1.61	0.350	0.350	0.937
C2403-12-08	3/4 1/2	1-1/16-12	1/2-14	0.656	0.422	1.69	0.350	0.305	1.125
C2403-12-12	3/4	1-1/16-12	1-1/16-12	0.656	0.656	1.81	0.350	0.350	1.125
C2403-14-14	7/8	1-3/16-12	1-3/16-12	0.719	0.719	1.81	0.350	0.350	1.250
C2403-16-16	1	1-5/16-12	1-5/16-12	0.875	0.875	1.81	0.415	0.415	1.375
C2403-20-20	1-1/4	1-5/8-12	1-5/8-12	1.093	1.093	1.89	0.415	0.415	1.688
C2403-24-24	1-1/2	1-7/8-12	1-7/8-12	1.344	1.344	1.96	0.485	0.485	2.000
C2403-32-32	2	2-1/2-12	2-1/2-12	1.813	1.813	2.11	0.485	0.485	2.625

BT-BT Tube Union Large Hex Straight C2403-LH Series

SAE# 080119 / MS# 51856

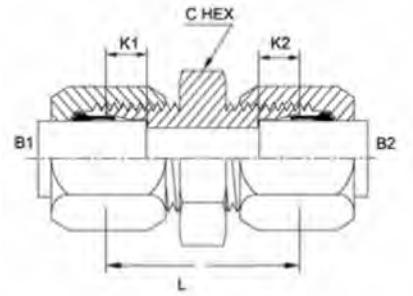

PART ND.SIZE	TUBE O.D.	B1 THREAD	B2 THREAD	B1 DRILL	B2 DRILL	L LGTH	K1 DEPTH	K2 DEPTH	C HEX
C2403-LH-04-04	1/4	7/16-20	7/16-20	0.203	0.203	1.18	0.234	0.234	0.688
C2403-LH-06-06	3/8	9/16-18	9/16-18	0.281	0.281	1.24	0.250	0.250	0.812
C2403-LH-08-06	1/2 3/8	3/4-16	9/16-18	0.422	0.281	1.33	0.305	0.250	1.000
C2403-LH-08-08	1/2	3/4-16	3/4-16	0.422	0.422	1.42	0.305	0.305	1.000
C2403-LH-10-10	5/8	7/8-14	7/8-14	0.500	0.500	1.61	0.350	0.350	1.125
C2403-LH-12-12	3/4	1-1/16-12	1-1/16-12	0.656	0.656	1.81	0.350	0.350	1.375
C2403-LH-16-16	1	1-5/16-12	1-5/16-12	0.875	0.875	1.81	0.415	0.415	1.625

Flareless Bite Type Fittings

BT-MP Adapter Straight
C2404 Series

SAE# 080102 / MS# 51819

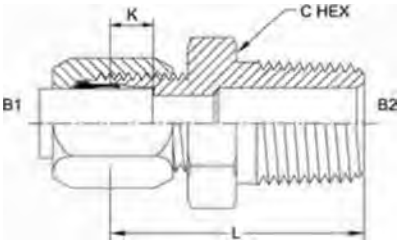

PART NO.SIZE	TUBE O.D.	B1 THREAD	B2 NPTF	B1 DRILL	B2 DRILL	L LGTH	K DEPTH	C HEX
C2404-02-02	1/8	5/16-24	1/8-27	0.093	0.188	1.04	0.188	0.438
C2404-02-04	1/8	5/16-24	1/4-18	0.093	0.281	1.24	0.188	0.625
C2404-03-02	3/16	3/8-24	1/8-27	0.125	0.188	1.09	0.234	0.438
C2404-04-02	1/4	7/16-20	1/8-27	0.203	0.188	1.12	0.234	0.500
C2404-04-04	1/4	7/16-20	1/4-18	0.203	0.281	1.32	0.234	0.625
C2404-04-06	1/4	7/16-20	3/8-18	0.203	0.406	1.33	0.234	0.812
C2404-04-08	1/4	7/16-20	1/2-14	0.203	0.531	1.58	0.234	0.937
C2404-05-02	5/16	1/2-20	1/8-27	0.234	0.188	1.12	0.250	0.562
C2404-05-04	5/16	1/2-20	1/4-18	0.234	0.281	1.32	0.250	0.625
C2404-0506	5/16	1/2-20	3/8-18	0.234	0.406	1.33	0.250	0.812
C2404-06-02	3/8	9/16-18	1/8-27	0.281	0.188	1.15	0.250	0.625
C2404-06-04	3/8	9/16-18	1/4-18	0.281	0.281	1.34	0.250	0.625
C2404-06-06	3/8	9/16-18	3/8-18	0.281	0.406	1.35	0.250	0.812
C2404-06-08	3/8	9/16-18	1/2-14	0.281	0.531	1.60	0.250	0.937
C2404-08-04	1/2	3/4-16	1/4-18	0.422	0.281	1.44	0.305	0.812
C2404-08-06	1/2	3/4-16	3/8-18	0.422	0.406	1.44	0.305	0.812
C2404-08-08	1/2	3/4-16	1/2-14	0.422	0.531	1.69	0.305	0.937
C2404-08-12	1/2	3/4-16	3/4-14	0.422	0.719	1.76	0.305	1.125
C2404-10-06	5/8	7/8-14	3/8-18	0.500	0.406	1.56	0.350	0.937
C2404-10-08	5/8	7/8-14	1/2-14	0.500	0.531	1.75	0.350	0.937
C2404-10-12	5/8	7/8-14	3/4-14	0.500	0.719	1.82	0.350	1.125
C2404-12-08	3/4	1-1/16-12	1/2-14	0.656	0.531	1.88	0.350	1.125
C2404-12-12	3/4	1-1/16-12	3/4-14	0.656	0.719	1.88	0.350	1.125
C2404-12-16	3/4	1-1/16-12	1-11 1/2	0.656	0.938	2.07	0.350	1.375
C2404-14-12	7/8	1-3/16-12	3/4-14	0.719	0.719	1.88	0.350	1.250
C2404-16-12	1	1-5/16-12	3/4-14	0.875	0.719	1.88	0.415	1.375
C2404-16-16	1	1-5/16-12	1-11 1/2	0.875	0.938	2.07	0.415	1.375
C2404-20-20	1-1/4	1-5/8-12	1-1/4-11 1/2	1.093	1.250	2.18	0.415	1.688
C2404-24-20	1-1/2	1-7/8-12	1-1/4-11 1/2	1.344	1.250	2.25	0.485	2.000
C2404-24-24	1-1/2	1-7/8-12	1-1/2-11 1/2	1.344	1.500	2.28	0.485	2.000
C2404-32-32	2	2-1/2-12	2-11 1/2	1.813	1.938	2.46	0.485	2.625

BT-FP Adapter Straight
C2405 Series

SAE# 080103

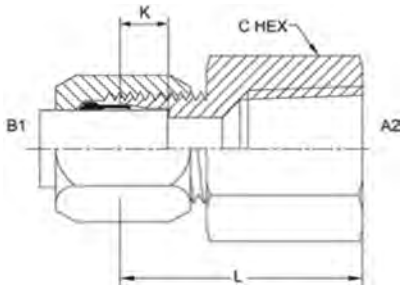

PART NO.SIZE	TUBE O.D.	B1 THREAD	A2 NPTf	B1 DRILL	L IBTH	K DEPTH	C HEX
C2405-02-02	1/8	5/16-24	1/8-27	0.093	1.05	0.188	0.562
C2405-04-02	1/4	7/16-20	1/8-27	0.203	1.09	0.234	0.562
C2405-04-04	1/4	7/16-20	1/4-18	0.203	1.30	0.234	0.750
C2405-05-02	5/16	1/2-20	1/8-27	0.234	1.08	0.250	0.562
C2405-05-04	5/16	1/2-20	1/4-18	0.234	1.30	0.250	0.750
C2405-06-04	3/8	9/16-18	1/4-18	0.281	1.31	0.250	0.750
C2405-06-06	3/8	9/16-18	3/8-18	0.281	1.36	0.250	0.875
C2405-06-08	3/8	9/16-18	1/2-14	0.281	1.53	0.250	1.125
C2405-08-04	1/2	3/4-16	1/4-18	0.422	1.46	0.305	0.875
C2405-08-06	1/2	3/4-16	3/8-18	0.422	1.47	0.305	0.875
C2405-08-08	1/2	3/4-16	1/2-14	0.422	1.64	0.305	1.125
C2405-10-06	5/8	7/8-14	3/8-18	0.500	1.54	0.350	1.125
C2405-10-08	5/8	7/8-14	1/2-14	0.500	1.76	0.350	1.125
C2405-12-12	3/4	1-1/16-12	3/4-14	0.656	1.89	0.350	1.375
C2405-14-12	7/8	1-3/16-12	3/4-14	0.719	1.86	0.350	1.375
C2405-16-16	1	1-5/16-12	1-11-1/2	0.875	2.13	0.415	1.625
C2405-20-20	1-1/4	1-5/8-12	1-1/4-11-1/2	1.093	2.22	0.415	2.000
C2405-24-24	1-1/2	1-7/8-12	1-1/2-11-1/2	1.344	2.23	0.485	2.375

Tube-BT Reducer
C2406 Series

SAE# 080123

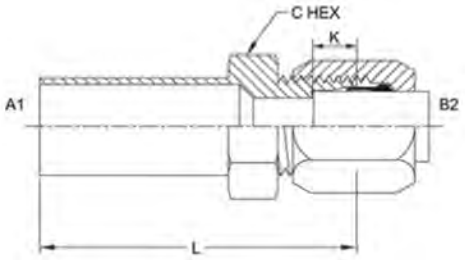

PART NO.SIZE	A1 TUBE O.D.	A1 TUBE	B2 TUBE	B2 THREAD	A1 DRILL	B2 DRILL	L LGTH	K DEPTH	G HEX
C2406-06-04	3/8	0.375	1/4	7/16-20	0.250	0.203	1.61	0.234	0.500
C2406-08-04	1/2	0.500	1/4	7/16-20	0.375	0.203	1.73	0.234	0.562
C2406-08-06	1/2	0.500	3/8	9/16-18	0.375	0.281	1.77	0.250	0.625
C2406-10-08	5/8	0.625	1/2	3/4-16	0.500	0.422	1.96	0.305	0.812
C2406-12-06	3/4	0.750	3/8	9/16-18	0.625	0.281	1.93	0.250	0.812
C2406-12-08	3/4	0.750	1/2	3/4-16	0.625	0.422	2.03	0.305	0.812
C2406-16-08	1	1.000	1/2	3/4-16	0.844	0.422	2.05	0.305	1.062
C2406-16-12	1	1.000	3/4	1-1/16-12	0.844	0.656	2.24	0.350	1.125
C2406-20-16	1-1/4	1.250	1	1-5/16-12	1.031	0.875	2.28	0.415	1.375

Flareless Bite Type Fittings

Plug BT
C2408 Series

SAE# 080109

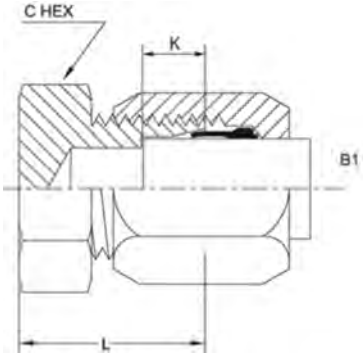

PART NO.SIZE	TUBE O.D.	B1 THREAD	B1 DRILL	L LOTH	K DEPTH	C HEX
C2408-02	1/8	5/16-24	0.093	0.63	0.188	0.438
C2408-04	1/4	7/16-20	0.203	0.71	0.234	0.500
C2408-06	3/8	9/16-18	0.281	0.75	0.250	0.625
C2408-08	1/2	3/4-16	0.422	0.85	0.305	0.812
C2408-10	5/8	7/8-14	0.500	0.97	0.350	0.938
C2408-12	3/4	1-1/16-12	0.656	1.10	0.350	1.125
C2408-16	1	1-5/16-12	0.875	1.10	0.415	1.375
C2408-20	1-1/4	1-5/8-12	1.093	1.18	0.415	1.688

BT-BT Elbow 90°
C2500 Series

SAE# 080201 / MS#51820

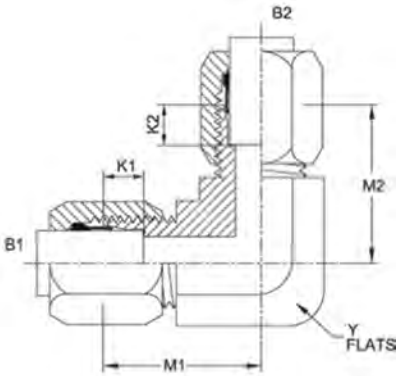

PART NO.SIZE	TUBE O.D.	B1 THREAD	B2 THREAD	B1 DRILL	B2 DRILL	MI LETH	M2 LETH	K1 DEPTH	K2 DEPTH	Y FLATS
C2500-02-02-FG	1/8	5/16-24	5/16-24	0.093	0.093	0.77	0.77	0.188	0.188	0.438
C2500-04-04-FG	1/4	7/16-20	7/16-20	0.203	0.203	0.89	0.89	0.234	0.234	0.438
C2500-05-05-FG	5/16	1/2-20	1/2-20	0.234	0.234	0.95	0.95	0.250	0.250	0.562
C2500-06-06-FG	3/8	9/16-18	9/16-18	0.281	0.281	1.05	1.05	0.250	0.250	0.562
C2500-08-08-FG	1/2	3/4-16	3/4-16	0.422	0.422	1.25	1.25	0.305	0.305	0.750
C2500-10-10-FG	5/8	7/8-14	7/8-14	0.500	0.500	1.42	1.42	0.350	0.350	0.875
C2500-12-12-FG	3/4	1-1/16-12	1-1/16-12	0.656	0.656	1.58	1.58	0.350	0.350	1.062
C2500-16-16-FG	1	1-5/16-12	1-5/16-12	0.875	0.875	1.73	1.73	0.415	0.415	1.312
C2500-20-20-FG	1-1/4	1-5/8-12	1-5/8-12	1.093	1.093	1.89	1.89	0.415	0.415	1.625
C2500-24-24-FG	1-1/2	1-7/8-12	1-7/8-12	1.344	1.344	2.02	2.02	0.485	0.485	1.875

BT-MP Elbow 90°
C2501 Series

SAE# 080202 / MS#51815

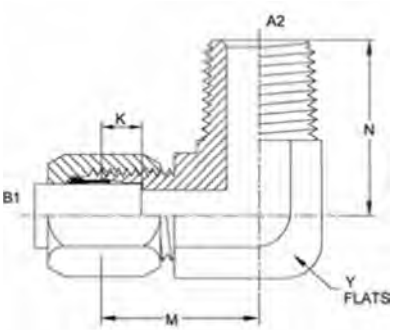

PART NO.SIZE	TUBE D.D.	B1 THREAD	A2 NPTF	B1 DRILL	A2 DRILL	M LGTH	N LGTH	K DEPTH	Y FLATS
C2501-02-02-FG	1/8	5/16-24	1/8-27	0.093	0.188	0.77	0.72	0.188	0.438
C2501-03-02-FG	3/16	3/8-24	1/8-27	0.125	0.188	0.83	0.72	0.234	0.438
C2501-04-02-FG	1/4	7/16-20	1/8-27	0.203	0.188	0.89	0.78	0.234	0.438
C2501-04-04-FG	1/4	7/16-20	1/4-18	0.203	0.281	1.03	1.09	0.234	0.562
C2501-04-06-FG	1/4	7/16-20	3/8-18	0.203	0.406	1.12	1.22	0.234	0.750
C2501-04-08-FG	1/4	7/16-20	1/2-14	0.203	0.531	1.22	1.47	0.234	0.875
C2501-05-02-FG	5/16	1/2-20	1/8-27	0.234	0.188	0.95	0.81	0.250	0.562
C2501-05-04-FG	5/16	1/2-20	1/4-18	0.234	0.281	1.03	1.09	0.250	0.562
C2501-06-02-FG	3/8	9/16-18	1/8-27	0.281	0.188	1.05	0.90	0.250	0.562
C2501-06-04-FG	3/8	9/16-18	1/4-18	0.281	0.281	1.05	1.09	0.250	0.562
C2501-06-06-FG	3/8	9/16-18	3/8-18	0.281	0.406	1.14	1.22	0.250	0.750
C2501-06-08-FG	3/8	9/16-18	1/2-14	0.281	0.531	1.24	1.47	0.250	0.875
C2501-08-04-FG	1/2	3/4-16	1/4-18	0.422	0.281	1.25	1.22	0.305	0.750
C2501-08-06-FG	1/2	3/4-16	3/8-18	0.422	0.406	1.25	1.22	0.305	0.750
C2501-08-08-FG	1/2	3/4-16	1/2-14	0.422	0.531	1.35	1.47	0.305	0.875
C2501-08-12-FG	1/2	3/4-16	3/4-14	0.422	0.719	1.43	1.59	0.305	1.062
C2501-10-06-FG	5/8	7/8-14	3/8-18	0.500	0.406	1.42	1.28	0.350	0.875
C2501-10-08-FG	5/8	7/8-14	1/2-14	0.500	0.531	1.42	1.47	0.350	0.875
C2501-10-12-FG	5/8	7/8-14	3/4-14	0.500	0.719	1.50	1.59	0.350	1.062
C2501-12-08-FG	3/4	1-1/16-12	1/2-14	0.656	0.531	1.58	1.59	0.350	1.062
C2501-12-12-FG	3/4	1-1/16-12	3/4-14	0.656	0.719	1.58	1.59	0.350	1.062
C2501-16-12-FG	1	1-5/16-12	3/4-14	0.875	0.719	1.73	1.78	0.415	1.312
C2501-16-16-FG	1	1-5/16-12	1-11 1/2	0.875	0.938	1.73	1.97	0.415	1.312
C2501-20-20-FG	1-1/4	1-5/8-12	1-1/4-11 1/2	1.093	1.250	1.89	2.38	0.415	1.625
C2501-24-24-FG	1-1/2	1-7/8-12	1-1/2-11 1/2	1.344	1.500	2.02	2.64	0.485	1.875
C2501-32-32-FG	2	2-1/2-12	2-11 1/2	1.813	1.938	2.45	3.00	0.485	2.500

BT-MP Elbow 90° Long
C2501-L Series

SAE# 071502

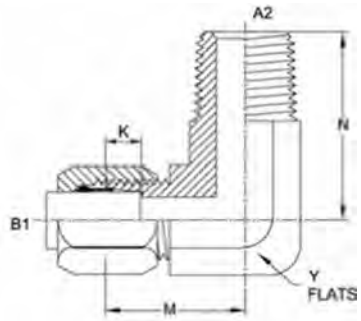

PART NO.SIZE	TUBE O.D.	B1 THREAD	A2 NPTF	B1 DRILL	A2 DRILL	M LGTH	N LGTH	K DEPTH	Y FLATS
C2501-L-04-02-FG	1/4	7/16-20	1/8-27	0.203	0.188	0.89	1.17	0.234	0.438
C2501-L-04-04-FG	1/4	7/16-20	1/4-18	0.203	0.281	1.03	1.58	0.234	0.562
C2501-L-05-04-FG	5/16	1/2-20	1/4-18	0.234	0.281	0.95	1.58	0.250	0.562
C2501-L-06-06-FG	3/8	9/16-18	3/8-18	0.281	0.406	1.14	1.82	0.250	0.750
C2501-L-12-12-FG	3/4	1-1/16-12	3/4-14	0.656	0.719	1.58	2.44	0.350	1.062
C2501-L-16-16-FG	1	1-5/16-12	1-11 1/2	0.875	0.938	1.73	3.01	0.415	1.312
C2501-L-20-20-FG	1-1/4	1-5/8-12	1-1/4-11 1/2	1.093	1.250	1.89	3.69	0.415	1.625
C2501-L-24-24-FG	1-1/2	1-7/8-12	1-1/2-11 1/2	1.344	1.500	2.02	4.10	0.485	1.875
C2501-L-32-32-FG	2	2-1/2-12	2-11 1/2	1.813	1.938	2.45	4.81	0.485	2.500

Flareless Bite Type Fittings

BT-MP Elbow 90° X-Long
C2501-LL Series

SAE# 081602

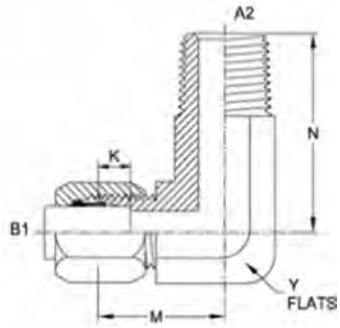

PART NO.SIZE	TUBE O.D.	B1 THREAD	A2 NPTF	B1 DRILL	A2 DRILL	M LGTH	N LGTH	K DEPTH	Y FLATSt
C2501-LL-04-02-FG	1/4	7/16-20	1/8-27	0.203	0.188	0.89	1.56	0.234	0.438
C2501-LL-04-04-FG	1/4	7/16-20	1/4-18	0.203	0.281	1.03	2.07	0.234	0.562
C2501-LL-05-02-FG	5/16	1/2-20	1/8-27	0.234	0.188	0.95	1.63	0.250	0.562
C2501-LL-06-04-FG	3/8	9/16-18	1/4-18	0.281	0.281	1.05	2.07	0.250	0.562
C2501-LL-08-06-FG	1/2	3/4-16	3/8-18	0.422	0.406	1.25	2.42	0.305	0.750
C2501-LL-10-08-FG	5/8	7/8-14	1/2-14	0.500	0.531	1.42	2.87	0.350	0.875
C2501-LL-12-12-FG	3/4	1-1/16-12	3/4-14	0.656	0.719	1.58	3.28	0.350	1.062
C2501-LL-16-16-FG	1	1-5/16-12	1-11 1/2	0.875	0.938	1.73	4.05	0.415	1.312
C2501-LL-20-20-FG	1-1/4	1-5/8-12	1-1/4-11 1/2	1.093	1.250	1.89	5.00	0.415	1.625
C2501-LL-24-24-FG	1-1/2	1-7/8-12	1-1/2-11 1/2	1.344	1.500	2.02	5.55	0.485	1.875
C2501-LL-32-32-FG	2	2-1/2-12	2-11 1/2	1.813	1.938	2.45	6.63	0.485	2.500

BT-FP Elbow 90°
C2502 Series

SAE# 080203 / MS# 51813

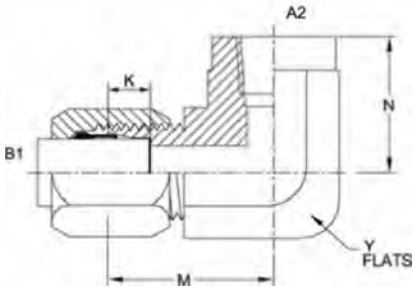

PART NO.SIZE	TUBE O.D.	B1 THREAD	A2 NPTF	B1 DRILL	M LGTH	N LGTH	K DEPTH	Y FLATS
C2502-04-02-FG	1/4	7/16-20	1/8-27	0.203	0.89	0.66	0.234	0.562
C2502-04-04-FG	1/4	7/16-20	1/4-18	0.203	1.03	0.88	0.234	0.750
C2502-05-02-FG	5/16	1/2-20	1/8-27	0.234	0.95	0.66	0.250	0.562
C2502-06-04-FG	3/8	9/16-18	1/4-18	0.281	1.05	0.88	0.250	0.750
C2502-06-06-FG	3/8	9/16-18	3/8-18	0.281	1.12	1.02	0.250	0.875
C2502-08-04-FG	1/2	3/4-16	1/4-18	0.422	1.23	1.02	0.305	0.875
C2502-08-06-FG	1/2	3/4-16	3/8-18	0.422	1.23	1.02	0.305	0.875
C2502-08-08-FG	1/2	3/4-16	1/2-14	0.422	1.35	1.23	0.305	1.062
C2502-10-08-FG	5/8	7/8-14	1/2-14	0.500	1.42	1.23	0.350	1.062
C2502-12-12-FG	3/4	1-1/16-12	3/4-14	0.656	1.58	1.36	0.350	1.312
C2502-16-16-FG	1	1-5/16-12	1-11 1/2	0.875	1.73	1.62	0.415	1.625
C2502-20-20-FG	1-1/4	1-5/8-12	1-1/4-11 1/2	1.093	2.08	1.70	0.415	1.875
C2502-24-24-FG	1-1/2	1-7/8-12	1-1/2-11 1/2	1.344	2.58	2.08	0.485	2.562

BT-MP Elbow 45°
C2503 Series

SAE# 080302 / MS# 51817

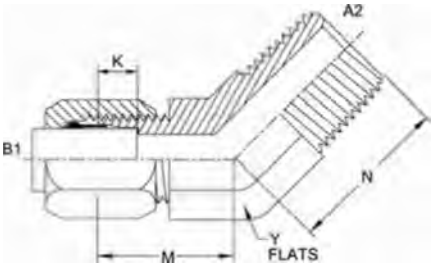

PART NO.SIZE	TUBE O.D.	B1 THREAD	A2 NPTF	B1 DRILL	A2 DRILL	M LGTH	N LGTH	K DEPTH	Y FLATS
C250304-02-FG	1/4	7/16-20	1/8-27	0.203	0.188	0.70	0.64	0.234	0.438
C250304-04-FG	1/4	7/16-20	1/4-18	0.203	0.281	0.81	0.86	0.234	0.562
C2503-06-04-FG	3/8	9/16-18	1/4-18	0.281	0.281	0.83	0.86	0.250	0.562
C2503-06-06-FG	3/8	9/16-18	3/8-18	0.281	0.406	0.87	0.95	0.250	0.750
C2503-06-08-FG	3/8	9/16-18	1/2-14	0.281	0.531	0.90	1.17	0.250	0.875
C2503-08-06-FG	1/2	3/4-16	3/8-18	0.422	0.406	0.98	0.95	0.305	0.750
C2503-08-08-FG	1/2	3/4-16	1/2-14	0.422	0.531	1.01	1.17	0.305	0.875
C2503-08-12-FG	1/2	3/4-16	3/4-14	0.422	0.719	1.12	1.20	0.305	1.062
C2503-10-06-FG	5/8	7/8-14	3/8-18	0.500	0.406	1.08	0.98	0.350	0.875
C2503-10-08-FG	5/8	7/8-14	1/2-14	0.500	0.531	1.08	1.17	0.350	0.875
C2503-12-08-FG	3/4	1-1/16-12	1/2-14	0.656	0.531	1.27	1.20	0.350	1.062
C2503-12-12-FG	3/4	1-1/16-12	3/4-14	0.656	0.719	1.27	1.20	0.350	1.062
C2503-16-16-FG	1	1-5/16-12	1-11 1/2	0.875	0.938	1.36	1.48	0.415	1.312
C2503-20-20-FG	1-1/4	1-5/8-12	1-1/4-11 1/2	1.093	1.250	1.45	1.67	0.415	1.625

BT-BT Elbow 45°
C2504 Series

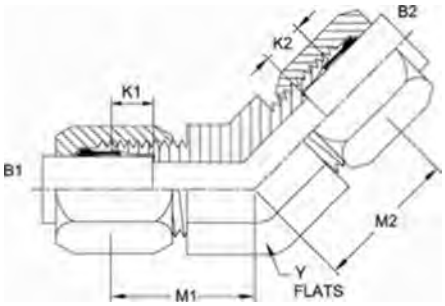

PART NO.SIZE	TUBE O.D.	B1 THREAD	B2 THREAD	B1 DRILL	B2 DRILL	MI LGTH	M2 LGTH	K1 DEPTH	K2 DEPTH	Y FLATS
C2504-12-12-FG	3/4	1-1/16-12	1-1/16-12	0.656	0.656	1.27	1.27	0.350	0.350	1.062
C2504-16-16-FG	1	1-5/16-12	1-5/16-12	0.875	0.875	1.36	1.36	0.415	0.415	1.312
C2504-20-20-FG	1-1/4	1-5/8-12	1-5/8-12	1.093	1.093	1.45	1.45	0.415	0.415	1.625

Flareless Bite Type Fittings

BT-BT-MP Tee
C2601 Series

SAE# 080425 / MS#51818

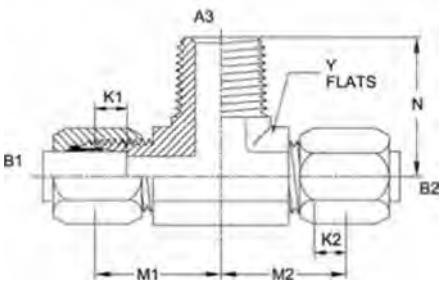

PART NO.SIZE	TUBE O.D.	B1 THREAD	B2 THREAD	A3 NPTF	B1 DRILL	B2 DRILL	A3 DRILL	MI LBTH	M2 LBTH	N LGTH	K1 DEPTH	K2 DEPTH	Y FLATS
C2601-02-02-02-FG	1/8	5/16-24	5/16-24	1/8-27	0.093	0.093	0.188	0.77	0.77	0.72	0.188	0.188	0.438
C2601 -04-04-02-FG	1/4	7/16-20	7/16-20	1/8-27	0.203	0.203	0.188	0.89	0.89	0.78	0.234	0.234	0.438
C2601 -04-04-04-FG	1/4	7/16-20	7/16-20	1/4-18	0.203	0.203	0.281	1.03	1.03	1.09	0.234	0.234	0.562
C2601 -05-05-02-FG	5/16	1/2-20	1/2-20	1/8-27	0.234	0.234	0.188	0.95	0.95	0.81	0.250	0.250	0.562
C2601 -06-06-04-FG	3/8	9/16-18	9/16-18	1/4-18	0.281	0.281	0.281	1.05	1.05	1.09	0.250	0.250	0.562
C2601-06-06-06-FG	3/8	9/16-18	9/16-18	3/8-18	0.281	0.281	0.406	1.14	1.14	1.22	0.250	0.250	0.750
C2601-08-08-06-FG	1/2	3/4-16	3/4-16	3/8-18	0.422	0.422	0.406	1.25	1.25	1.22	0.305	0.305	0.750
C2601-08-08-08-FG	1/2	3/4-16	3/4-16	1/2-14	0.422	0.422	0.531	1.35	1.35	1.47	0.305	0.305	0.875
C2601-10-10-08-FG	5/8	7/8-14	7/8-14	1/2-14	0.500	0.500	0.531	1.42	1.42	1.47	0.350	0.350	0.875
C2601-12-12-12-FG	3/4	1-1/16-12	1-1/16-12	3/4-14	0.656	0.656	0.719	1.58	1.58	1.59	0.350	0.350	1.062
C2601-16-16-16-FG	1	1-5/16-12	1-5/16-12	1-11 1/2	0.875	0.875	0.938	1.73	1.73	1.97	0.415	0.415	1.312

BT-BT-FP Tee
C2602 Series

SAE# 080427 / MS#51821

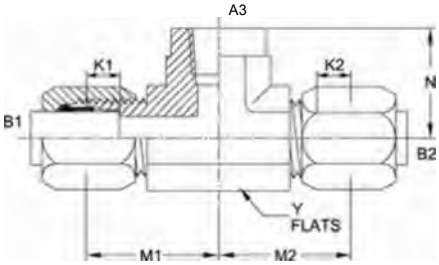

PART NO.SIZE	TUBE O.D.	B1 THREAD	B2 THREAD	A3 NPTF	B1 DRILL	B2 DRILL	MI LGTH	M2 LGTH	N LGTH	K1 DEPTH	K2 DEPTH	Y FLATS
C2602-04-04-02-FG	1/4	7/16-20	7/16-20	1/8-27	0.203	0.203	0.89	0.89	0.66	0.234	0.234	0.562
C2602-04-04-04-FG	1/4	7/16-20	7/16-20	1/4-18	0.203	0.203	1.03	1.03	0.88	0.234	0.234	0.750
C2602-06-06-04-FG	3/8	9/16-18	9/16-18	1/4-18	0.281	0.281	1.05	1.05	0.88	0.250	0.250	0.750
C2602-08-08-06-FG	1/2	3/4-16	3/4-16	3/8-18	0.422	0.422	1.23	1.23	1.02	0.305	0.305	0.875
C2602-08-08-08-FG	1/2	3/4-16	3/4-16	3/4-16	0.422	0.422	1.35	1.35	1.23	0.305	0.305	1.062
C2602-10-10-08-FG	5/8	7/8-14	7/8-14	1/2-14	0.500	0.500	1.42	1.42	1.23	0.350	0.350	1.062
C2602-12-12-12-FG	3/4	1-1/16-12	1-1/16-12	3/4-14	0.656	0.656	1.58	1.58	1.36	0.350	0.350	1.312
C2602-16-16-16-FG	1	1-5/16-12	1-5/16-12	1-11 1/2	0.875	0.875	1.73	1.73	1.62	0.415	0.415	1.625
C2602-20-20-20-FG	1-1/4	1-5/8-12	1-5/8-12	1-1/4-11 1/2	1.093	1.093	2.08	2.08	1.70	0.415	0.415	1.875

BT-BT-BT Tee
C2603 Series

SAE# 080401 / MS#51811

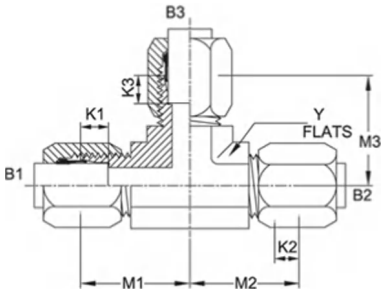

PART NO.SIZE	TUBE O.D.	B1 THREAD	B2 THREAD	B3 THREAD	B1 DRILL	B2 DRILL	B3 DRILL	MI LGTH	M2 LETH	M3 LGTH	K1 DEPTH	K2 DEPTH	K3 DEPTH	Y FLATS
C2603-02-02-02-FG	1/8	5/16-24	5/16-24	5/16-24	0.093	0.093	0.093	0.77	0.77	0.77	0.188	0.188	0.188	0.438
C2603-03-03-03-FG	3/16	3/8-24	3/8-24	3/8-24	0.125	0.125	0.125	0.83	0.83	0.83	0.234	0.234	0.234	0.438
C2603-04-04-04-FG	1/4	7/16-20	7/16-20	7/16-20	0.203	0.203	0.203	0.89	0.89	0.89	0.234	0.234	0.234	0.438
C2603-05-05-05-FG	5/16	1/2-20	1/2-20	1/2-20	0.234	0.234	0.234	0.95	0.95	0.95	0.250	0.250	0.250	0.562
C2603-06-06-06-FG	3/8	9/16-18	9/16-18	9/16-18	0.281	0.281	0.281	1.05	1.05	1.05	0.250	0.250	0.250	0.562
C2603-08-08-08-FG	1/2	3/4-16	3/4-16	3/4-16	0.422	0.422	0.422	1.25	1.25	1.25	0.305	0.305	0.305	0.750
C2603-10-10-10-FG	5/8	7/8-14	7/8-14	7/8-14	0.500	0.500	0.500	1.42	1.42	1.42	0.350	0.350	0.350	0.875
C2603-12-12-12-FG	3/4	1-1/16-12	1-1/16-12	1-1/16-12	0.656	0.656	0.656	1.58	1.58	1.58	0.350	0.350	0.350	1.062
C2603-14-14-14-FG	7/8	1-3/16-12	1-3/16-12	1-3/16-12	0.719	0.719	0.719	1.66	1.66	1.66	0.350	0.350	0.350	1.312
C2603-16-16-16-FG	1	1-5/16-12	1-5/16-12	1-5/16-12	0.875	0.875	0.875	1.73	1.73	1.73	0.415	0.415	0.415	1.312
C2603-20-20-16-FG	1-1/4	1-5/8-12	1-5/8-12	1-5/16-12	1.093	1.093	0.875	1.89	1.89	1.89	0.415	0.415	0.415	1.625
C2603-20-20-20-FG	1-1/4	1-5/8-12	1-5/8-12	1-5/8-12	1.093	1.093	1.093	1.89	1.89	1.89	0.415	0.415	0.415	1.625
C2603-24-24-24-FG	1-1/2	1-7/8-12	1-7/8-12	1-7/8-12	1.344	1.344	1.344	2.02	2.02	2.02	0.485	0.485	0.485	1.875
C2603-32-32-32-FG	2	2-1/2-12	2-1/2-12	2-1/2-12	1.813	1.813	1.813	2.45	2.45	2.45	0.485	0.485	0.485	2.500

BT-MP-BT Tee
C2605 Series

SAE# 080424 / MS#51824

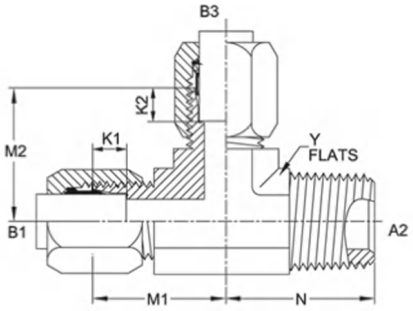

PART NO.SIZE	TUBE O.D.	B1 THREAD	A2 NPTF	B3 THREAD	B1 DRILL	A2 DRILL	B3 DRILL	MI LGTH	N LGTH	M2 LGTH	K1 DEPTH	K2 DEPTH	Y FLATS
C2605-04-02-04-FG	1/4	7/16-20	1/8-27	7/16-20	0.203	0.188	0.203	0.89	0.78	0.89	0.234	0.234	0.438
C2605-04-04-04-FG	1/4	7/16-20	1/4-18	7/16-20	0.203	0.281	0.203	1.03	1.09	1.03	0.234	0.234	0.562
C2605-05-02-05-FG	5/16	1/2-20	1/8-27	1/2-20	0.234	0.188	0.234	0.95	0.81	0.95	0.250	0.250	0.562
C2605-06-04-06-FG	3/8	9/16-18	1/4-18	9/16-18	0.281	0.281	0.281	1.05	1.09	1.05	0.250	0.250	0.562
C2605-06-06-06-FG	3/8	9/16-18	3/8-18	9/16-18	0.281	0.406	0.281	1.14	1.22	1.14	0.250	0.250	0.750
C2605-06-06-08-FG	1/2	3/4-16	3/8-18	3/4-16	0.281	0.406	0.422	1.14	1.22	1.25	0.250	0.305	0.750
C2605-08-08-08-FG	1/2	3/4-16	1/2-14	3/4-16	0.422	0.531	0.422	1.35	1.47	1.35	0.305	0.305	0.875
C2605-10-08-10-FG	5/8	7/8-14	1/2-14	7/8-14	0.500	0.531	0.500	1.42	1.47	1.42	0.350	0.350	0.875
C2605-12-12-12-FG	3/4	1-1/16-12	3/4-14	1-1/16-12	0.656	0.719	0.656	1.58	1.59	1.58	0.350	0.350	1.062
C2605-16-16-16-FG	1	1-5/16-12	1-11 1/2	1-5/16-12	0.875	0.938	0.875	1.73	1.97	1.73	0.415	0.415	1.312

Flareless Bite Type Fittings

BT-FP-BT Tee
C2606 Series

SAE# 080426 / MS#51822

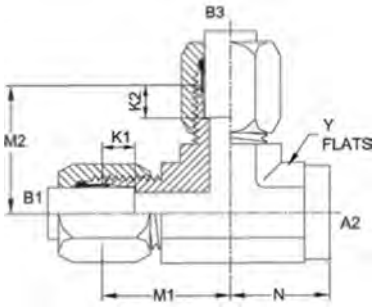

PART NO.SIZE	TUBE O.D.	B1 THREAD	A2 NPTF	B3 THREAD	B1 DRILL	B3 DRILL	MI LBTH	N LGTH	MZ LGTH	K1 DEPTH	K2 DEPTH	Y FLATS
C2606-04-02-04-FG	1/4	7/16-20	1/8-27	7/16-20	0.203	0.203	0.89	0.66	0.89	0.234	0.234	0.562
C2606-06-04-06-FG	3/8	9/16-18	1/4-18	9/16-18	0.281	0.281	1.05	0.88	1.05	0.250	0.250	0.750
C2606-08-06-08-FG	1/2	3/4-16	3/8-18	3/4-16	0.422	0.422	1.23	1.02	1.23	0.305	0.305	0.875
C2606-10-08-10-FG	5/8	7/8-14	1/2-14	7/8-14	0.500	0.500	1.42	1.23	1.42	0.350	0.350	1.062
C2606-12-12-12-FG	3/4	1-1/16-12	3/4-14	1-1/16-12	0.656	0.656	1.58	1.36	1.58	0.350	0.350	1.312
C2606-16-16-16-FG	1	1-5/16-12	1-11 1/2	1-5/16-12	0.875	0.875	1.73	1.62	1.73	0.415	0.415	1.625

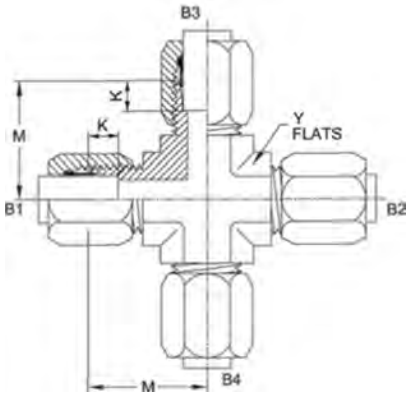

BT-BT-BT-BT Cross
C2650 Series

SAE# 080501 / M S # 51894

PART NO.SIZE	TUBE O.D.	B1 THREAD	B2 THREAD	B3 THREAD	B4 THREAD	B1 DRILL	M LCTH	K DEPTH	Y FLATS
C2650-04-04-04-04-FG	1/4	7/16-20	7/16-20	7/16-20	7/16-20	0.203	0.89	0.234	0.438
C2650-06-06-06-06-FG	3/8	9/16-18	9/16-18	9/16-18	9/16-18	0.281	1.05	0.250	0.562
C2650-08-08-08-08-FG	1/2	3/4-16	3/4-16	3/4-16	3/4-16	0.422	1.25	0.305	0.750
C2650-10-10-10-10-FG	5/8	7/8-14	7/8-14	7/8-14	7/8-14	0.500	1.42	0.350	0.875
C2650-16-16-16-16-FG	1	1-5/16-12	1-5/16-12	1-5/16-12	1-5/16-12	0.875	1.73	0.415	1.312
C2650-20-20-20-20-FG	1-1/4	1-5/8-12	1-5/8-12	1-5/8-12	1-5/8-12	1.093	1.89	0.415	1.625
C2650-24-24-24-24-FG	1-1/2	1-7/8-12	1-7/8-12	1-7/8-12	1-7/8-12	1.344	2.02	0.485	1.875
C2650-32-32-32-32-FG	2	2-1/2-12	2-1/2-12	2-1/2-12	2-1/2-12	1.813	2.45	0.485	2.500

BT-BT Bulkhead Union
C2700 Series

SAE# 080601

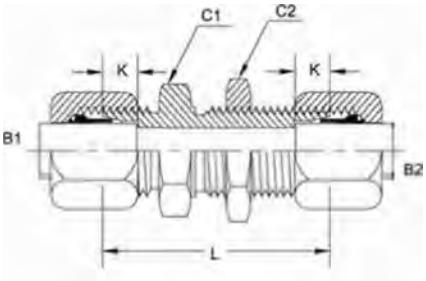

PART NO.SIZE	TUBE O.D.	B1 THREAD	B2 THREAD	B1 DRILL	B2 DRILL	K DEPTH	I LGTH	CI HEX	C2 HEX
C2700-04-04	1/4	7/16-20	7/16-20	0.203	0.203	0.234	1.89	0.688	0.688
C2700-06-06	3/8	9/16-18	9/16-18	0.281	0.281	0.250	1.98	0.813	0.812
C2700-08-08	1/2	3/4-16	3/4-16	0.422	0.422	0.305	2.22	1.000	1.000
C2700-10-10	5/8	7/8-14	7/8-14	0.500	0.500	0.350	2.48	1.125	1.125
C2700-12-12	3/4	1-1/16-12	1-1/16-12	0.656	0.656	0.350	2.72	1.375	1.375
C2700-16-16	1	1-5/16-12	1-5/16-12	0.875	0.875	0.415	2.72	1.625	1.625

BT-BT Bulkhead Union 90°
C2701 Series

SAE# 080701 / MS# 51855

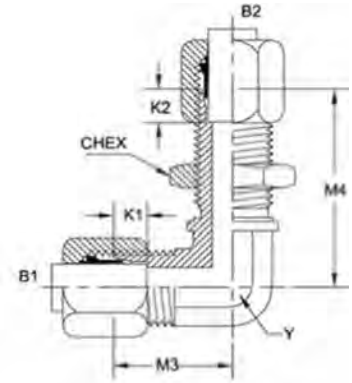

PART NO.SIZE	TUBE O.D.	B1 THREAD	B2 THREAD	81 DRILL	B2 DRILL	M3 LGTH	M4 LGTH	K1 DEPTH	K2 DEPTH	C HEX	Y FLATS
C2701-03-03-FG	3/16	3/8-24	3/8-24	0.125	0.125	0.94	1.44	0.234	0.234	0.625	0.438
C2701-04-04-FG	1/4	7/16-20	7/16-20	0.203	0.203	0.95	1.52	0.234	0.234	0.688	0.438
C2701-06-06-FG	3/8	9/16-18	9/16-18	0.281	0.281	1.08	1.70	0.250	0.250	0.813	0.562
C2701-08-08-FG	1/2	3/4-16	3/4-16	0.422	0.422	1.33	1.97	0.305	0.305	1.000	0.750
C2701-10-10-FG	5/8	7/8-14	7/8-14	0.500	0.500	1.52	2.27	0.350	0.350	1.125	0.875
C2701-12-12-FG	3/4	1-1/16-12	1-1/16-12	0.656	0.656	1.64	2.48	0.350	0.350	1.375	1.062
C2701-16-16-FG	1	1-5/16-12	1-5/16-12	0.875	0.875	1.73	2.61	0.415	0.415	1.625	1.312
C2701-20-20-FG	1-1/4	1-5/8-12	1-5/8-12	1.093	1.093	2.02	2.89	0.415	0.415	2.000	1.625

Flareless Bite Type Fittings

BT-BT Bulkhead Union 45°
C2702 Series

SAE# 080801

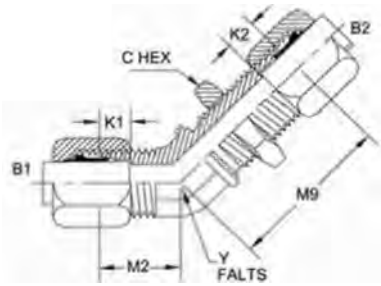

PART NO.SIZE	TUBE O.D.	B1 THREAD	82 THREAD	B1 DRILL	B2 DRILL	M2 LGTH	M9 LGTH	K1 DEPTH	K2 DEPTH	C HEX	Y FLATS
C2702-04-04-FG	1/4	7/16-20	7/16-20	0.203	0.203	0.70	1.45	0.234	0.234	0.688	0.438
C2702-06-06-FG	3/8	9/16-18	9/16-18	0.281	0.281	0.83	1.56	0.250	0.250	0.813	0.562
C2702-08-08-FG	1/2	3/4-16	3/4-16	0.422	0.422	0.98	1.81	0.305	0.305	1.000	0.750
C2702-12-12-FG	3/4	1-1/16-12	1-1/16-12	0.656	0.656	1.27	2.25	0.350	0.350	1.375	1.062

BT-BT-BT Bulkhead Branch Tee
C2703 Series

SAE# 080959

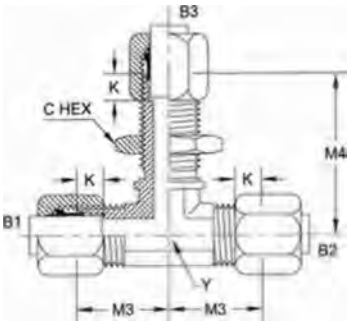

PART NO.SIZE	TUBE O.D.	B1 THREAD	B2 THREAD	83 THREAD	B1 DRILL	B2 DRILL	B3 DRILL	K DEPTH	M3 LGTH	M4 LGTH	C HEX	Y FLATS
C2703-04-04-04-FG	1/4	7/16-20	7/16-20	7/16-20	0.203	0.203	0.203	0.234	0.95	1.52	0.688	0.438
C2703-05-05-05- FG	5/16	1/2-20	1/2-20	1/2-20	0.234	0.234	0.234	0.250	1.05	1.66	0.750	0.562
C2703-06-06-06-FG	3/8	9/16-18	9/16-18	9/16-18	0.281	0.281	0.281	0.250	1.08	1.70	0.813	0.562
C2703-10-10-10-FG	1/2	7/8-14	7/8-14	7/8-14	0.500	0.500	0.500	0.350	1.52	2.27	1.125	0.875
C2703-12-12-12-FG	3/4	1-1/16-12	1-1/16-12	1-1/16-12	0.656	0.656	0.656	0.350	1.64	2.48	1.375	1.062

BT-BT-BT Bulkhead Run Tee
C2704 Series

SAE# 080958

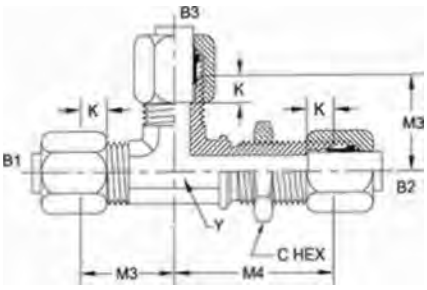

PART NO.SIZE	TUBE O.D.	B1 THREAD	82 THREAD	B3 THREAD	B1 DRILL	B2 DRILL	B3 DRILL	K DEPTH	M3 LGTH	M4 LGTH	C HEX	Y FLATS
C2704-04-04-04-FG	1/4	7/16-20	7/16-20	7/16-20	0.203	0.203	0.203	0.234	0.95	1.52	0.688	0.438
C2704-06-06-06-FG	3/8	9/16-18	9/16-18	9/16-18	0.281	0.281	0.281	0.250	1.08	1.70	0.813	0.562
C2704-08-08-08-FG	1/2	3/4-16	3/4-16	3/4-16	0.422	0.422	0.422	0.305	1.33	1.97	1.000	0.750
C2704-12-12-12-FG	3/4	1-1/16-12	1-1/16-12	1-1/16-12	0.656	0.656	0.656	0.350	1.64	2.48	1.375	1.062

MP-BT Bulkhead
C2706 Series

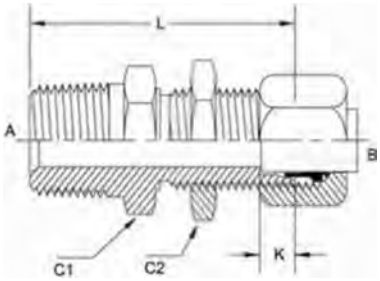

PART NO.SIZE	TUBE O.D.	A NPTF	B THREAD	A DRILL	B DRILL	L LGTH	K DEPTH	CI HEX	C2 HEX
C2706-02-04	1/4	1/8-27	7/16-20	0.188	0.203	1.77	0.234	0.688	0.688
C2706-04-04	1/4	1/4-18	7/16-20	0.281	0.203	1.98	0.234	0.688	0.688
C2706-04-06	3/8	1/4-18	9/16-18	0.281	0.281	2.03	0.250	0.812	0.812
C2706-06-06	3/8	3/8-18	9/16-18	0.406	0.281	2.03	0.250	0.812	0.812
C2706-08-06	3/8	1/2-14	9/16-18	0.531	0.281	2.28	0.250	0.875	0.875
C2706-08-08	1/2	1/2-14	3/4-16	0.531	0.422	2.42	0.305	1.000	1.000
C2706-12-12	3/4	3/4-14	1-1/16-12	0.719	0.656	2.74	0.350	1.375	1.375
C2706-16-16	1	1-11-1/2	1-5/16-12	0.938	0.875	2.93	0.415	1.625	1.625

BT-MJ Bulkhead
C2707 Series

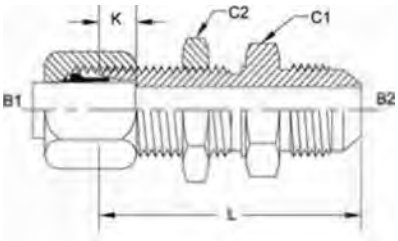

PART NO.SIZE	TUBE D.D.	B1 THREAD	B2 THREAD	B1 DRILL	B2 DRILL	K DEPTH	L LGTH	CI HEX	C2 HEX
C2707-04-04	1/4	7/16-20	7/16-20	0.203	0.172	0.234	1.94	0.688	0.688
C2707-06-06	3/8	9/16-18	9/16-18	0.281	0.297	0.250	2.08	0.812	0.812
C2707-08-08	1/2	3/4-16	3/4-16	0.422	0.391	0.305	2.31	1.000	1.000
C2707-12-12	3/4	1-1/16-12	1-1/16-12	0.656	0.609	0.350	2.94	1.375	1.375
C2707-16-16	1	1-5/16-12	1-5/16-12	0.875	0.844	0.415	2.95	1.625	1.625

Flareless Bite Type Fittings

BT-MORB
C6400-0 Series

SAE # 080120 /MS # 51843

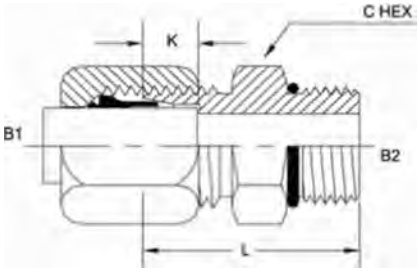

PART NO.SIZE	TUBE O.D.	B1 THREAD	B2 THREAD	B1 DRILL	B2 DRILL	K DEPTH	L LBTH	C HEX
C6400-02-02-0	1/8	5/16-24	5/16-24	0.093	0.093	0.188	0.99	0.438
C6400-03-03-0	3/16	3/8-24	3/8-24	0.125	0.125	0.234	1.04	0.500
C6400-04-04-0	1/4	7/16-20	7/16-20	0.203	0.203	0.234	1.13	0.562
C6400-04-05-0	1/4 5/16	7/16-20	1/2-20	0.203	0.234	0.234	1.13	0.625
C6400-04-06-0	1/4 3/8	7/16-20	9/16-18	0.203	0.281	0.234	1.19	0.688
C6400-05-05-0	5/16	1/2-20	1/2-20	0.234	0.234	0.250	1.13	0.625
C6400-06-04-0	3/8 1/4	9/16-18	7/16-20	0.281	0.203	0.250	1.24	0.688
C6400-06-05-0	3/8 5/16	9/16-18	1/2-20	0.281	0.234	0.250	1.24	0.688
C6400-06-06-0	3/8	9/16-18	9/16-18	0.281	0.281	0.250	1.21	0.688
C6400-06-08-0	3/8 1/2	9/16-18	3/4-16	0.281	0.422	0.250	1.29	0.875
C6400-08-06-0	1/2 3/8	3/4-16	9/16-18	0.422	0.281	0.305	1.42	0.875
C6400-08-08-0	1/2	3/4-16	3/4-16	0.422	0.422	0.305	1.38	0.875
C6400-08-10-0	1/2 5/8	3/4-16	7/8-14	0.422	0.500	0.305	1.51	1.000
C6400-08-12-O	1/2 3/4	3/4-16	1-1/16-12	0.422	0.656	0.305	1.67	1.250
C6400-10-10-0	5/8	7/8-14	7/8-14	0.500	0.500	0.350	1.57	1.000
C6400-12-08-0	3/4 1/2	1-1/16-12	3/4-16	0.656	0.422	0.350	1.82	1.250
C6400-12-12-0	3/4	1-1/16-12	1-1/16-12	0.656	0.656	0.350	1.79	1.250
C6400-12-16-0	3/4 1	1-1/16-12	1-5/16-12	0.656	0.875	0.350	1.82	1.500
C6400-16-12-0	1-3/4	1-5/16-12	1-1/16-12	0.875	0.656	0.415	1.82	1.500
C6400-16-16-0	1	1-5/16-12	1-5/16-12	0.875	0.875	0.415	1.82	1.500
C6400-20-20-0	1-1/4	1-5/8-12	1-5/8-12	1.093	1.093	0.415	1.90	1.875
C6400-24-24-O	1-1/2	1-7/8-12	1-7/8-12	1.344	1.344	0.485	1.97	2.125
C6400-32-32-O	2	2-1/2-12	2-1/2-12	1.813	1.813	0.485	2.13	2.750

BT-MORB Long
C6400-L-0 Series

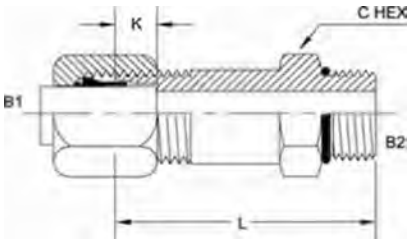

PART NO.SIZE	TUBE O.D.	B1 THREAD	BZ THREAD	B1 DRILL	B2 DRILL	K DEPTH	L LGTH	G HEX
C6400-L-04-04-0	1/4	7/16-20	7/16-20	0.203	0.203	0.234	2.02	0.562
C6400-L-06-06-0	3/8	9/16-18	9/16-18	0.281	0.281	0.250	2.23	0.688
C6400-L-08-08-0	1/2	3/4-16	3/4-16	0.422	0.422	0.305	2.62	0.875
C6400-L-10-10-0	5/8	7/8-14	7/8-14	0.500	0.500	0.350	2.98	1.000
C6400-L-12-12-0	3/4	1-1/16-12	1-1/16-12	0.656	0.656	0.350	3.53	1.250
C6400-L-16-16-0	1	1-5/16-12	1-5/16-12	0.875	0.875	0.415	3.91	1.500

BT-BTS 90°
C6500 Series

SAE# 080221 / MS# 51852

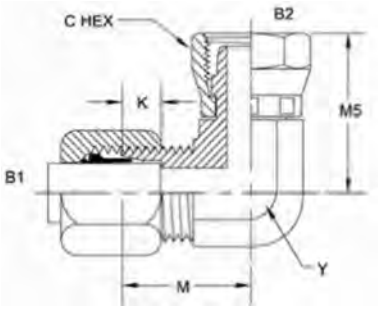

PART NO.SIZE	TUBE O.D.	B1 THREAD	B2 THREAD	B1 DRILL	B2 DRILL	X DEPTH	M LGTH	M5 LGTH	C HEX	Y FLATS
C6500-04-04-FG	1/4	7/16-20	7/16-20	0.203	0.203	0.234	0.89	1.05	0.562	0.438
C6500-06-06-FG	3/8	9/16-18	9/16-18	0.281	0.281	0.250	1.05	1.28	0.688	0.562
C6500-08-08-FG	1/2	3/4-16	3/4-16	0.422	0.422	0.305	1.25	1.47	0.875	0.750
C6500-10-10-FG	5/8	7/8-14	7/8-14	0.500	0.500	0.350	1.42	1.61	1.000	0.875
C6500-12-12-FG	3/4	1-1/16-12	1-1/16-12	0.656	0.656	0.350	1.58	1.77	1.250	1.062
C6500-16-16-FG	1	1-5/16-12	1-5/16-12	0.875	0.875	0.415	1.73	1.86	1.500	1.312
C6500-20-20-FG	1-1/4	1-5/8-12	1-5/8-12	1.093	1.093	0.415	1.89	2.08	2.000	1.625

BT-BTS 45°
C6502 Series

SAE# 080321

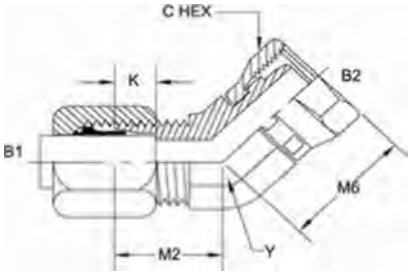

PART NO.SIZE	TUBE O.D.	B1 THREAD	B2 THREAD	B1 DRILL	B2 DRILL	X DEPTH	M2 LGTH	MG LGTH	C HEX	Y FLATS
C6502-04-04-FG	1/4	7/16-20	7/16-20	0.203	0.203	0.234	0.70	0.98	0.562	0.438
C6502-06-06-FG	3/8	9/16-18	9/16-18	0.281	0.281	0.25	0.83	1.20	0.688	0.562
C6502-08-08-FG	1/2	3/4-16	3/4-16	0.422	0.422	0.305	0.98	1.33	0.875	0.750
C6502-12-12-FG	3/4	1-1/16-12	1-1/16-12	0.656	0.656	0.35	1.27	1.61	1.250	1.062
C6502-16-16-FG	1	1-5/16-12	1-5/16-12	0.875	0.875	0.415	1.36	1.70	1.500	1.312
C6502-20-20-FG	1-1/4	1-5/8-12	1-5/8-12	1.093	1.093	0.415	1.45	1.80	2.000	1.625
C6502-24-24-FG	1-1/2	1-7/8-12	1-7/8-12	1.344	1.344	0.485	1.52	1.92	2.250	1.875

BT-BT-BTS Tee
C6600 Series

SAE# 080433 / MS# 51853

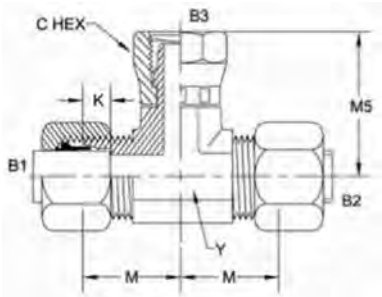

PART NO.SIZE	TUBE O.D.	B1 THREAD	82 THREAD	B3 THREAD	B1 DRILL	B2 DRILL	B3 DRILL	X DEPTH	M LGTH	M5 LGTH	C HEX	Y FLATS
C6600-04-04-04-FG	1/4	7/16-20	7/16-20	7/16-20	0.203	0.203	0.203	0.234	0.89	1.05	0.562	0.438
C6600-06-06-06-FG	3/8	9/16-18	9/16-18	9/16-18	0.281	0.281	0.281	0.250	1.05	1.28	0.688	0.562
C6600-08-08-08-FG	1/2	3/4-16	3/4-16	3/4-16	0.422	0.422	0.422	0.305	1.25	1.47	0.875	0.750
C6600-12-12-12-FG	3/4	1-1/16-12	1-1/16-12	1-1/16-12	0.656	0.656	0.656	0.350	1.58	1.77	1.250	1.062

Flareless Bite Type Fittings

BT-BTS-BT Tee
C6602 Series

SAE# 080432 / MS# 51854

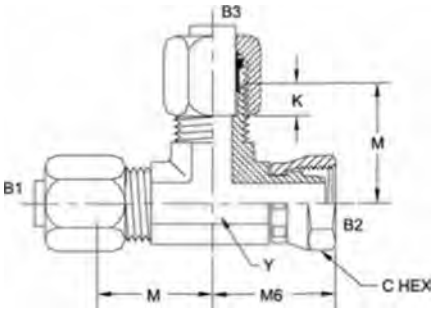

PART NO.SIZE	TUBE O.D.	B1 THREAD	B2 THREAD	B3 THREAD	B1 DRILL	B2 DRILL	B3 DRILL	K DEPTH	M LGTH	M6 LGTH	C HEX	Y FLATS
C6602-04-04-04-FG	1/4	7/16-20	7/16-20	7/16-20	0.203	0.203	0.203	0.234	0.89	1.05	0.562	0.438
C6602-06-06-06-FG	3/8	9/16-18	9/16-18	9/16-18	0.281	0.281	0.281	0.250	1.05	1.28	0.688	0.562
C6602-08-08-08-FG	1/2	3/4-16	3/4-16	3/4-16	0.422	0.422	0.422	0.305	1.25	1.47	0.875	0.750
C6602-12-12-12-FG	3/4	1-1/16-12	1-1/16-12	1-1/16-12	0.656	0.656	0.656	0.350	1.58	1.77	1.250	1.062
C6602-16-16-16-FG	1	1-5/16-12	1-5/16-12	1-5/16-12	0.875	0.875	0.875	0.415	1.73	1.86	1.500	1.312

BT-MAORB 90°
C6801-NWO Series

SAE# 080220 / MS# 51539

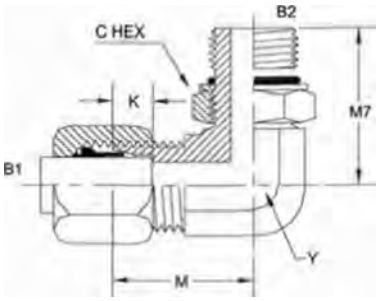

PART NO.SIZE	TUBE O.D.	B1 THREAD	B2 THREAD	B1 DRILL	B2 DRILL	K DEPTH	M LGTH	M7 LGTH	C HEX	Y FLATS
C6801 -03-03-NWO-FG	3/16	3/8-24	3/8-24	0.125	0.125	0.234	0.83	0.94	0.500	0.438
C6801-04-04-NWO-FG	1/4	7/16-20	7/16-20	0.203	0.203	0.234	0.89	1.03	0.562	0.438
C6801 -05-05-NWO-FG	5/16	1/2-20	1/2-20	0.234	0.234	0.250	0.95	1.13	0.625	0.562
C6801-06-04-NWO-FG	3/8	9/16-18	7/16-20	0.281	0.203	0.250	1.05	1.19	0.562	0.562
C6801 -06-06-N WO-FG	3/8	9/16-18	9/16-18	0.281	0.281	0.250	1.05	1.25	0.688	0.562
C6801 -06-08-NWO-FG	3/8	9/16-18	3/4-16	0.281	0.422	0.250	1.14	1.45	0.875	0.750
C6801 -08-06-NWO-FG	1/2	3/4-16	9/16-18	0.422	0.281	0.305	1.25	1.32	0.688	0.750
C6801 -08-08-NWO-FG	1/2	3/4-16	3/4-16	0.422	0.422	0.305	1.25	1.45	0.875	0.750
C6801-08-10-N WO-FG	1/2	3/4-16	7/8-14	0.422	0.500	0.305	1.35	1.70	1.000	0.875
C6801-08-12-N WO-FG	1/2	3/4-16	1-1/16-12	0.422	0.656	0.305	1.43	1.94	1.250	1.062
C6801-10-10-N WO-FG	5/8	7/8-14	7/8-14	0.500	0.500	0.350	1.42	1.70	1.000	0.875
C6801 -12-08-N WO-FG	3/4	1-1/16-12	3/4-16	0.656	0.422	0.350	1.58	1.62	0.875	1.062
C6801 -12-10-N WO-FG	3/4	1-1/16-12	7/8-14	0.656	0.500	0.350	1.58	1.78	1.000	1.062
C6801-12-12-N WO-FG	3/4	1-1/16-12	1-1/16-12	0.656	0.656	0.350	1.58	1.94	1.250	1.062
C6801-12-16-N WO-FG	3/4	1-1/16-12	1-5/16-12	0.656	0.875	0.350	1.73	2.05	1.500	1.312
C6801-16-12-N WO-FG	1	1-5/16-12	1-1/16-12	0.875	0.656	0.415	1.73	2.05	1.250	1.312
C6801 -16-16-N WO-FG	1	1-5/16-12	1-5/16-12	0.875	0.875	0.415	1.73	2.05	1.500	1.312
C6801-20-20-NWO-FG	1-1/4	1-5/8-12	1-5/8-12	1.093	1.093	0.415	1.89	2.25	1.875	1.625
C6801-24-24-N WO-FG	1-1/2	1-7/8-12	1-7/8-12	1.344	1.344	0.485	2.02	2.39	2.125	1.875

BT-MAORB 45°
C6802-NWO Series

SAE# 080320 / MS# 51842

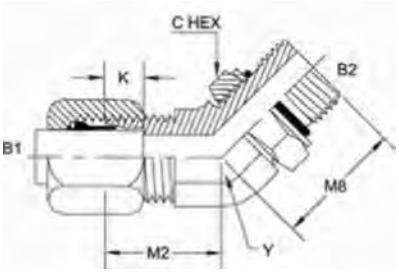

PART NO.SIZE	TUBE O.D.	B1 THREAD	B2 THREAD	B1 DRILL	B2 DRILL	K DEPTH	M2 LETH	MB LGTH	C HEX	Y FLATS
C6802-04-04-NWO-FG	1/4	7/16-20	7/16-20	0.203	0.203	0.234	0.70	1.05	0.562	0.438
C6802-06-06-NWO-FG	3/8	9/16-18	9/16-18	0.281	0.281	0.250	0.83	1.14	0.688	0.562
C6802-08-08-NWO-FG	1/2	3/4-16	3/4-16	0.422	0.422	0.305	0.98	1.30	0.875	0.750
C6802-10-10-NWO-FG	5/8	7/8-14	7/8-14	0.500	0.500	0.350	1.08	1.52	1.000	0.875
C6802-12-12-N WO-FG	3/4	1-1/16-12	1-1/16-12	0.656	0.656	0.350	1.27	1.73	1.250	1.062
C6802-16-16-NWO-FG	1	1-5/16-12	1-5/16-12	0.875	0.875	0.415	1.36	1.86	1.500	1.312

BT-BT-MAORB Tee
C6803-NWO Series

SAE# 080429 / MS# 51841

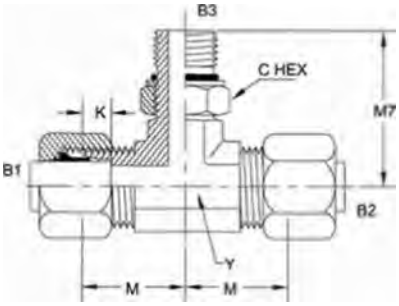

PART NO.SIZE	TUBE O.D.	B1 THREAD	B2 THREAD	B3 THREAD	B1 DRILL	B2 DRILL	B3 DRILL	X DEPTH	M LGTH	M7 LGTH	C HEX	Y FLATS
C6803-04-04-04-NWO-FG	1/4	7/16-20	7/16-20	7/16-20	0.203	0.203	0.203	0.234	0.89	1.03	0.562	0.438
C6803-06-06-06-N WO-FG	3/8	9/16-18	9/16-18	9/16-18	0.281	0.281	0.281	0.250	1.05	1.25	0.688	0.562
C6803-08-08-08-N WO-FG	1/2	3/4-16	3/4-16	3/4-16	0.422	0.422	0.422	0.305	1.25	1.45	0.875	0.750
C6803-12-12-12-NWO-FG	3/4	1-1/16-12	1-1/16-12	1-1/16-12	0.656	0.656	0.656	0.350	1.58	1.94	1.250	1.062
C6803-16-16-16-NWO-FG	1	1-5/16-12	1-5/16-12	1-5/16-12	0.875	0.875	0.875	0.415	1.73	2.05	1.500	1.312

BT-MAORB-BT Tee
C6804-NWO Series

SAE# 080428 / MS# 51892

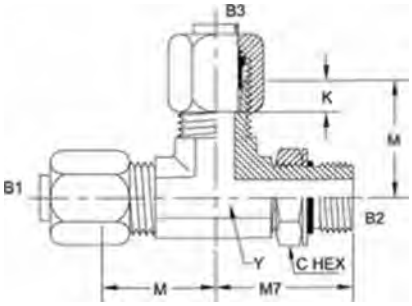

PART ND.SIZE	TUBE 0.0.	B1 THREAD	B2 THREAD	B3 THREAD	B1 DRILL	BZ DRILL	B3 DRILL	K DEPTH	M LGTH	M7 LGTH	C HEX	Y FLATS
C6804-04-04-04-N WO-FG	1/4	7/16-20	7/16-20	7/16-20	0.203	0.203	0.203	0.234	0.89	1.03	0.562	0.438
C6804-06-06-06-N WO-FG	3/8	9/16-18	9/16-18	9/16-18	0.281	0.281	0.281	0.250	1.05	1.25	0.688	0.562
C6804-08-08-08-N WO-FG	1/2	3/4-16	3/4-16	3/4-16	0.422	0.422	0.422	0.305	1.25	1.45	0.875	0.750
C6804-10-10-10-N WO-FG	5/8	7/8-14	7/8-14	7/8-14	0.500	0.500	0.500	0.350	1.42	1.70	1.000	0.875
C6804-12-12-12-NWO-FG	3/4	1-1/16-12	1-1/16-12	1-1/16-12	0.656	0.656	0.656	0.350	1.58	1.94	1.250	1.062
C6804-16-16-16-NWO-FG	1	1-5/16-12	1-5/16-12	1-5/16-12	0.875	0.875	0.875	0.415	1.73	2.05	1.500	1.312

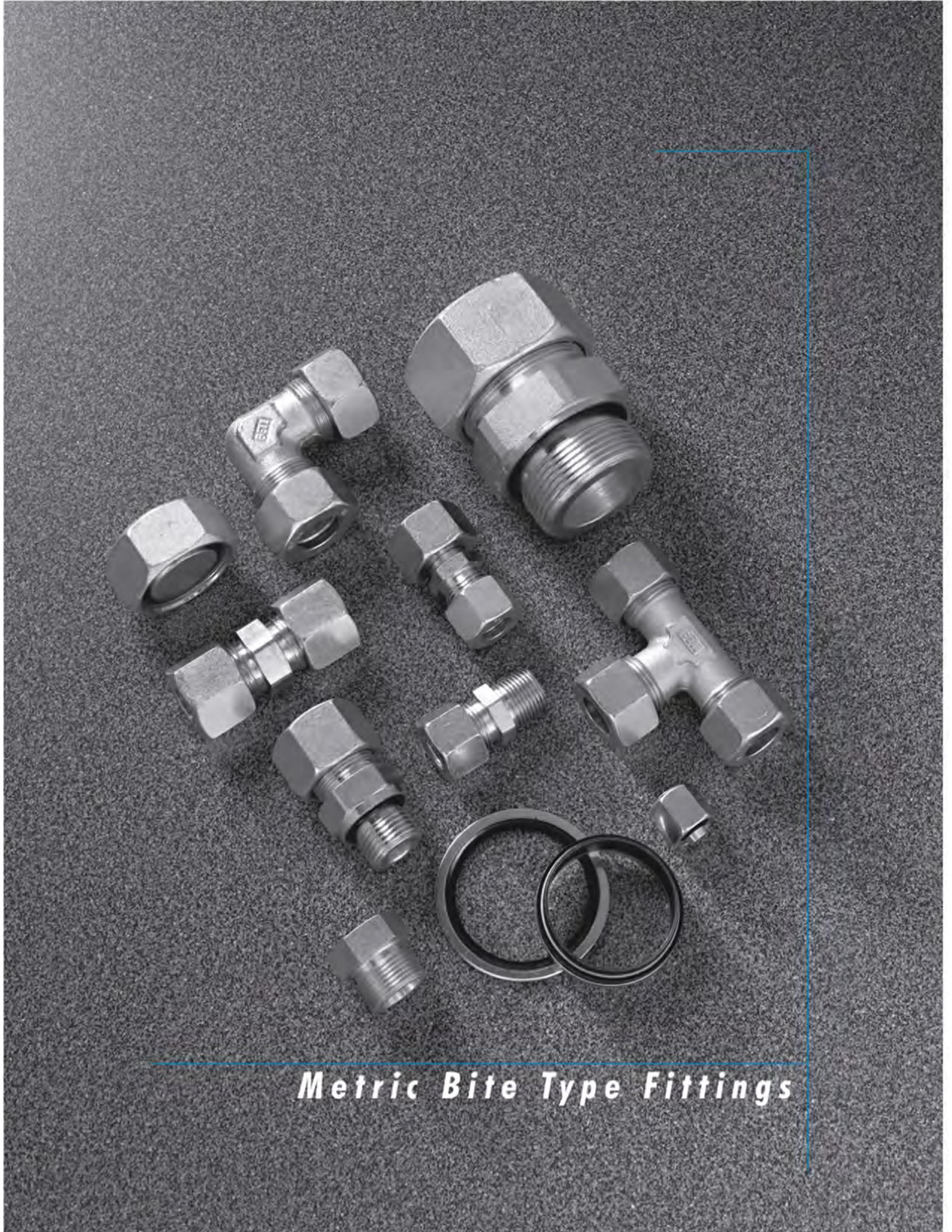

Metric Bite Type Fittings

Metric Bite Type Fittings

Brennan Industries Inc manufactures its Din fittings in accordance to the Din 2353 and ISO 8434-1 in hot forged steel and upon request stainless steel and brass.

F-001

F-009 **D8002** Hexagonal Bulkhead Nut	F-009 **D8003** Tube Plug	F-010 **D8004** Tube Cap	F-010 **D8005** Single Bite Ring	F-011 **D8006** Double Bite Ring	F-011 **D8007** DiNova Bite Ring
F-012 **D8008** Tube Nut	F-013 **D8020** Gauge Coupling BSP Body Only	F-013 **D8020-NBR** Gauge Coupling BSP	F-014 **D8021** Gauge Coupling Male Stud StandpipeType	F-014 **D8030-NBR** Straight Male Stud Coupling Metric Parallel Sealing Bite	F-015 **D8031** Straight Male Stud Coupling Metric Parallel Elastomer Seal Body Only
F-016 **D8031-NBR** Straight Male Stud Coupling Metric Parallel Elastomer Seal	F-017 **D8032** Straight Male Stud Coupling ISO 6149 O-ring Seal	F-017 **D8034** Female Stud Coupling Metric Body Only	F-018 **D8034-NBR** Female Stud Coupling Metric	F-018 **D8036** Straight Stud Standpipe Adapter Metric Parallel Elastomer Seal	F-019 **D8040** Straight Male Stud Coupling BSPP Sealing Bite Body Only
F-020 **D8040-NBR** Straight Male Stud Coupling BSPP Sealing Bite	F-021 **D8041** Straight Male Stud Coupling BSPP Elastomer Seal Body Only	F-022 **D8041-NBR** Straight Male Stud Coupling BSPP Elastomer Seal	F-023 **D8043** Straight Male Stud Coupling BSPT Body Only	F-024 **D8043-NBR** Straight Male Stud Coupling BSPT	F-025 **D8044** Female Stud Coupling BSPP Body Only
F-025 **D8044-NBR** Female Stud Coupling BSPP	F-026 **D8045** Straight Stud Standpipe Adapter BSPP Sealing Bite	F-026 **D8046** Straight Stud Standpipe Adapter BSPP Elastomer Seal	F-027 **D8050** Straight Male Stud Coupling NPTF Body Only	F-028 **D8050-NBR** Straight Male Stud Coupling NPTF	F-029 **D8051** Straight Male Stud Coupling ORB Body Only
F-030 **D8051-NBR** Straight Male Stud Coupling ORB	F-031 **D8060** Straight Coupling Body Only	F-032 **D8060-NBR** Straight Coupling	F-033 **D8061** Straight Bulkhead Coupling Body Only	F-033 **D8061-NBR** Straight Bulkhead Coupling	F-034 **D8062** Reducing Adjustable Coupling

Metric Bite Type Fittings

F-035 **D8062-NBR** Reducing Adjustable Coupling	F-036 **D8067** Straight Adjustable Coupling	F-036 **D8097** Welding Boss Body Only	F-037 **D8097-NBR** Welding Boss	F-037 **D8233** Male Stud Elbow Metric Taper Body Only	F-038 **D8233-NBR** Male Stud Elbow Metric Taper
F-038 **D8243** Male Stud Elbow BSPT Body Only	F-039 **D8243-NBR** Male Stud Elbow BSPT	F-039 **D8250** Male Stud Elbow NPTF Body Only	F-040 **D8250-NBR** Male Stud Elbow NPTF	F-040 **D8260** Elbow Coupling Body Only	F-041 **D8260-NBR** Elbow Coupling
F-041 **D8261** Bulkhead Elbow Body	F-041 **D8261-NBR** Bulkhead Elbow	F-042 **D8263** Adjustable Elbow with Tube Connection Body Only	F-042 **D8263-NBR** Adjustable Elbow with Tube Connection	F-043 **D8269** Adjustable Elbow Body With O-ring	F-044 **D8269-NBR** Adjustable Elbow with O-ring
F-045 **D8360** Tee Coupling Body Only	F-046 **D8360-NBR** Tee Coupling	F-047 **D8433** Male Stud Branch Tee Metric Taper Body Only	F-047 **D8433-NBR** Male Stud Branch Tee Metric Taper	F-047 **D8443** Male Stud Branch Tee BSPT Body Only	F-048 **D8443-NBR** Male Stud Branch Tee BSPT
F-048 **D8463** Adjustable Branch Tee with Tube Connection Body Only	F-049 **D8463-NBR** Adjustable Branch Tee with Tube Connection	F-049 **D8469** Adjustable Branch Tee Body with O-ring	F-050 **D8469-NBR** Adjustable Branch Tee with Tube connetion	F-050 **D8543** Male Stud Barrel Tee BSPT Body Only	F-051 **D8543-NBR** Male Stud Barrel Tee BSPT
F-051 **D8563** Adjustable Run Tee with Tube Connection Body Only	F-052 **D8563-NBR** Adjustable Run Tee with Tube Connection	F-053 **D8569** Adjustable Barrel Tee Body with O-ring	F-054 **D8569-NBR** Adjustable Barrel Tee with O-ring	F-055 **D8660** Cross Coupling Body Only	F-055 **D8660-NBR** Cross Coupling

Couplings to DIN 2353 / ISO 8434-1

Pressures

The pressure levels given in this catalogue are those for steel couplings that have been installed correctly.

Norminal pressures (PN) represent the acceptable working pressures, with a safety factor of 4, a constant load and temperatures from -20° to +120°C, according to ISO 8424-1.

Working pressures represent maximum acceptable pressures, with a safety factor of 2,5,a constant load and temperatures from -20° to +120°C, according to DIN 2401.

When higher temperatures and mechanical vibrations are involved, the working pressures should be reduced accordingly.

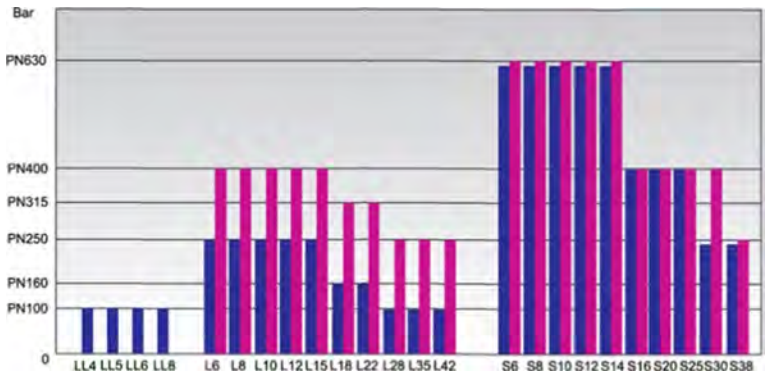

Nominal pressures for Legris couplings fitted with double-bite cutting rings and DiNova rings.Threaded plugs with captive flat O-ring seal (Form E DIN 3852).

Nominal pressures for couplings with cutting rings according to DIN 2353/1SO 8434

F-003

Principle

Cutting ring couplings enable the easy assembly of hydraulic pipe circuits, guaranteeing a high level of security. These couplings comprise a body, a cutting ring and a tightening nut. Depending on the pressure of an installation, the Brennan range offers bodies and nuts in 3 series: LL, for low pressure, L for medium pressure and S fa high pressure. Several cutting ring models are also available, giving maximum performance adapted to various installation problems.

the DiNova cutting ring, for all hydraulic installations

The DiNova ring is an answer to the sealing and safety requirements of hydraulic installations. Its performance is based on metal/metal sealing, reinforced by 2 PTFE seals and a gripping safety ensured by 3 bites.

Principal advantages:

- Seal protection: the geometry of the seal cavity prevents distortion and guarantees resistance to vibration. The protection of the seal is ensured throughout assembly, it will not compress until final crimping has been achieved (Legris patent). Its lwo PTFE seals enable repeated assembly with no deterioration in performance over time. In addition, they resist almost all aggressive fluids and a wide range of temperatures.

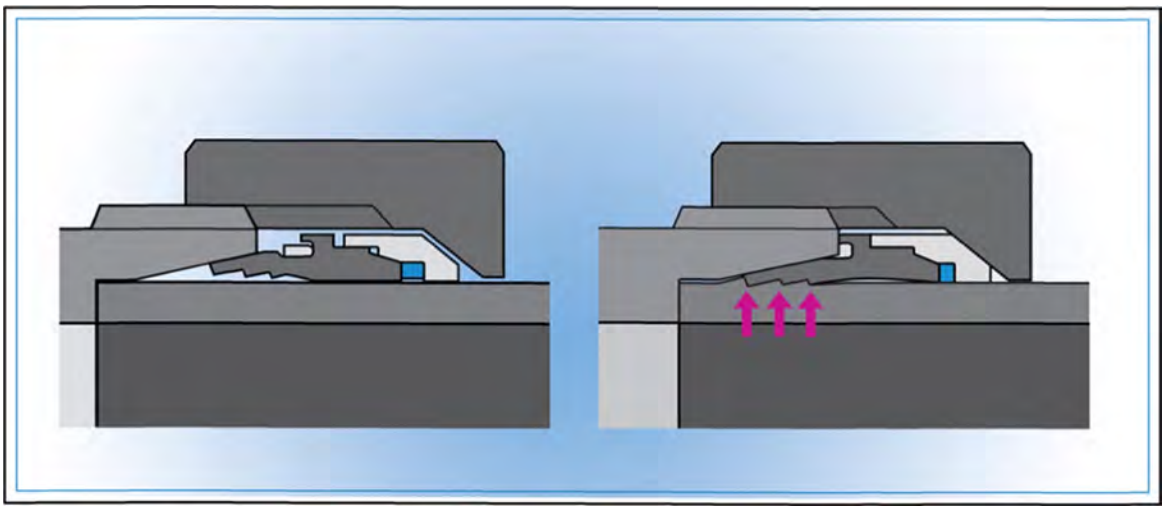

Metric Bite Type Fittings

- **Reliability and easy assembly:** a mechanical stop clearly indicates the crimp position and avoids the risk of insufficient tightening or over-tightening.
- **Safe connection:** three bites ensure a more precise assembly, less tube distortion and reinforce the safety of connection, even in severe conditions of use. Thanks to an increased area of interface with the tube upon tightening and the seal position within the assembly, the DiNova ring resistance to vibrations is extremely good.
  Visual control for proper crimping is possible (according to DIN 3859-2).

the double-bite ring,
for standard applications

By combining simplicity and assembly safety with good sealing performance, the Brennan double-bite ring is a solution well adapted to many hydraulic applications.
During the assembly, its two bites penetrate the tube one after the other. When tightening the nut, the cutting bites (1) and (2) penetrate the pipe wall and raise visible collars (5) and (6) around the pipe surface. The ring body (3) becomes wedged between the pipe wall and the inner cone thus preventing the advance of the double-bite ring. Part (4) projects forward to the end of the pipe and lies firmly against it. This dampens vibration which is then absorbed by ring body (3) preventing it from reaching the pipe grooves (1) and (2). This arrangement produces maximum compression strength and resistance to the effect of temperature fluctuations. When fitted properly, repeated assemblies are possible.

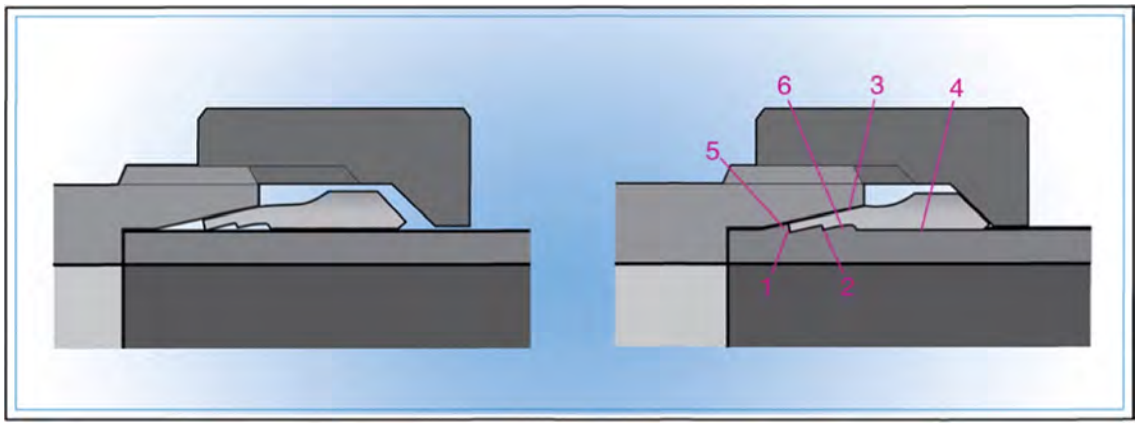

the single-bite cutting ring,
for low pressure circuifs (couplings only series LL)

The Brennan single-bite ring is suitable for applications lower than 100 bar. Its low tightening torque enables easy use. When tightening the nut, the cutting ring, with its pre-formed and hardened cutting bite (1) moves along the 24° inner cone of the coupling body. The cutting ring engages the pipe, cuts into the surface with its cutting edge and produces a visible collar (4). The pipe, which is cut at right angles (2) must push against the locating face in the body, without fail, in order to ensure a secure bite. Due to the internal shape of the cutting ring, vibration of the pipe is prevented.

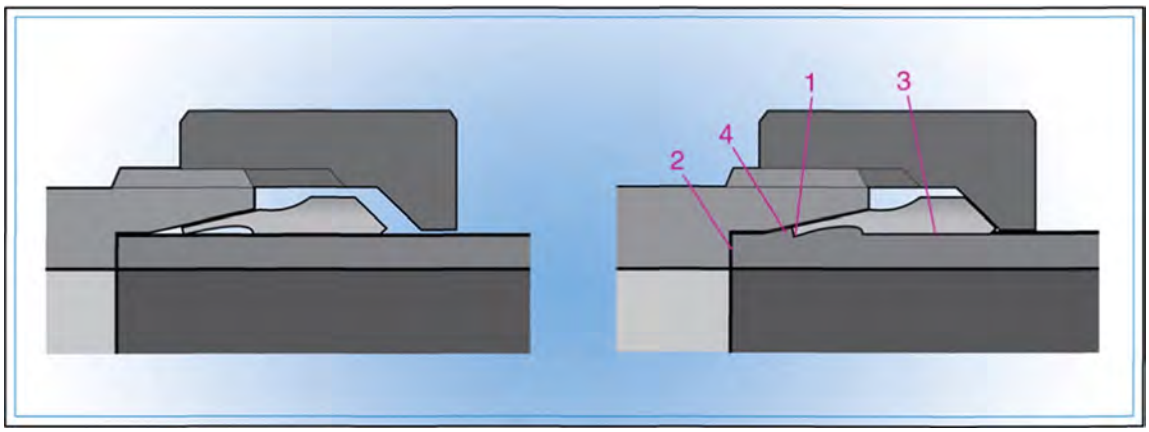

Tube preparation

1 - Saw the tube square (do not use a tube cutter). A 0,5° angular gap is acceptable.
2- Deburr the tube inside and outside. Acceptable chamfer 0,2x45°. Clean.
3- To ensure safe assembly, reinforcement should be used for tubes which are made of copper or aluminium and for thin walled steel tubes.
4- Minimum length of straight tube with tube bends and minimum straight tube length, see table.

Series	u	L	S
o.d. tube	4 5 6 8	6 8 10 12 15 18 22 28 35 42	6 8 10 12 14 16 20 25 30 38
H min	24 25 25 26	31 31 33 33 36 38 42 42 48 48	35 35 37 37 43 43 50 54 58 65
Lmin	30 32 32 33	39 39 42 42 45 48 53 53 60 60	44 44 47 47 54 54 63 68 73 82

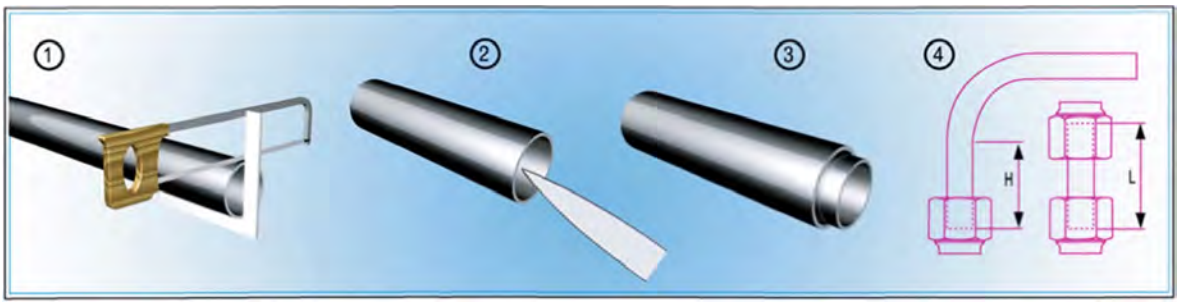

Note on lubrication

Galvanized couplings have a colourless lubricant coating.
Lubrication of the couplings components is unnecessary (diameters smaller than 20 mm).

In the case of bonded couplings and galvanized couplings that are still in circulation, the thread of the nut and the cone of the coupling body should be oiled.

Metric Bite Type Fittings

Installation

Installation with pre-assembly unit-single-bite, double-bite, and DiNova rings
The pre-assembled pressure is different from each ring model to another.
Please refer to pressure data in the following table.

o.d.tube (mm)	6	8	10	12	14	15	16	18	20	22	25	28	30	35	38	42
Tube thickness (bar)	1-2	1-2,5	1-3	1-3,5	2-4	1,5-3	2-3	1,5-3	2-4	1,5-3,5	2 | 2,5-5	2-3,5	2-4 | 5-6	2 12,5-5	2-3 14-6	2 | 3-5
Double-bite ring (bar)	25	30	35	40	45	45	55	55	70	70	90	80	110	100	135	125
DiNova ring (bar)	25	25	25	45	45	45	55	55	70	80	90 | 130	80	130|160	130| 160	130|170	130|170

1 - Select the retainer plates and the pre-installed body, according to series of the model and pipe size.
2- Push the nut and the cutting ring onto the sawn-off and deburred pipe.
3- Insert the pipe so that the nut and cutting ring lie between the retainer plates and installed body.
4- Press the pipe end firmly against the stop of the pre-installed body.
5- Hold firmly the pipe end in position and press the control button until the pre-assembled unit automaticdlly stops.
6- After completion of pre-assembly, remove the pipe.
7- Check whether a visible flange projection is present.

Final installation: Screw on the nut, by hand,until contact is perceptible. Hold the coupling body with a wrench and tighten the nut past the point of perceptible increase in force approximately 1/4 to 1/3 turns, until no further tightening is possible.

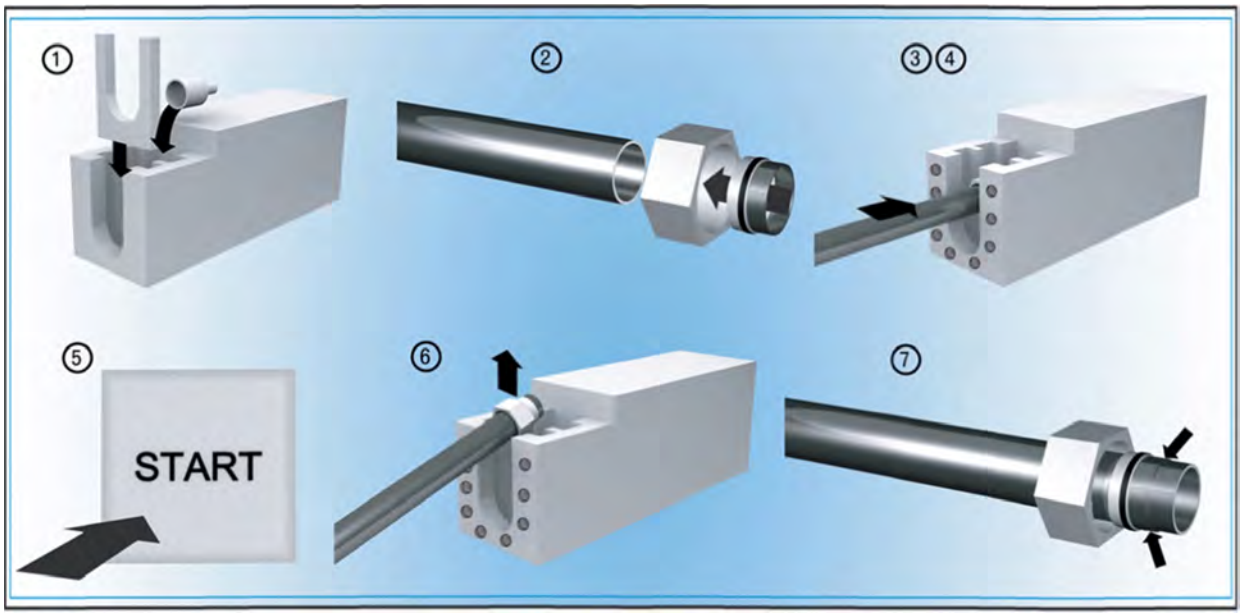

Installation with pre-assembly block -single-bite, double-bite and DiNova rings

Pre-installation

Lubricate the thread and the end of the pre-assembly block.

1 - Push the nut and the cutting ring onto the pipe.
2- Screw on the nut until contact is perceptible.
3- Push the pipe against the end of the lubricated pre-installation block, tightening the nut approximately 1 1/4 turns (1 1/2 turns for DiNova ring), with the help of the wrench

Checking pre-assembly:

4- After pre-assembly, slacken the nut. A visible cut edge must be present in front of the cutting ring. The cutting ring may rotate but will not permit axial displacement.

Final installation in the coupling body:

5- Screw on the nut by hand until noticeable contact is made.
6- Hold the coupling body with the wrench. Tighten the nut past the point of perceptible increase in force approximately 1/4 to 1/3 turns.

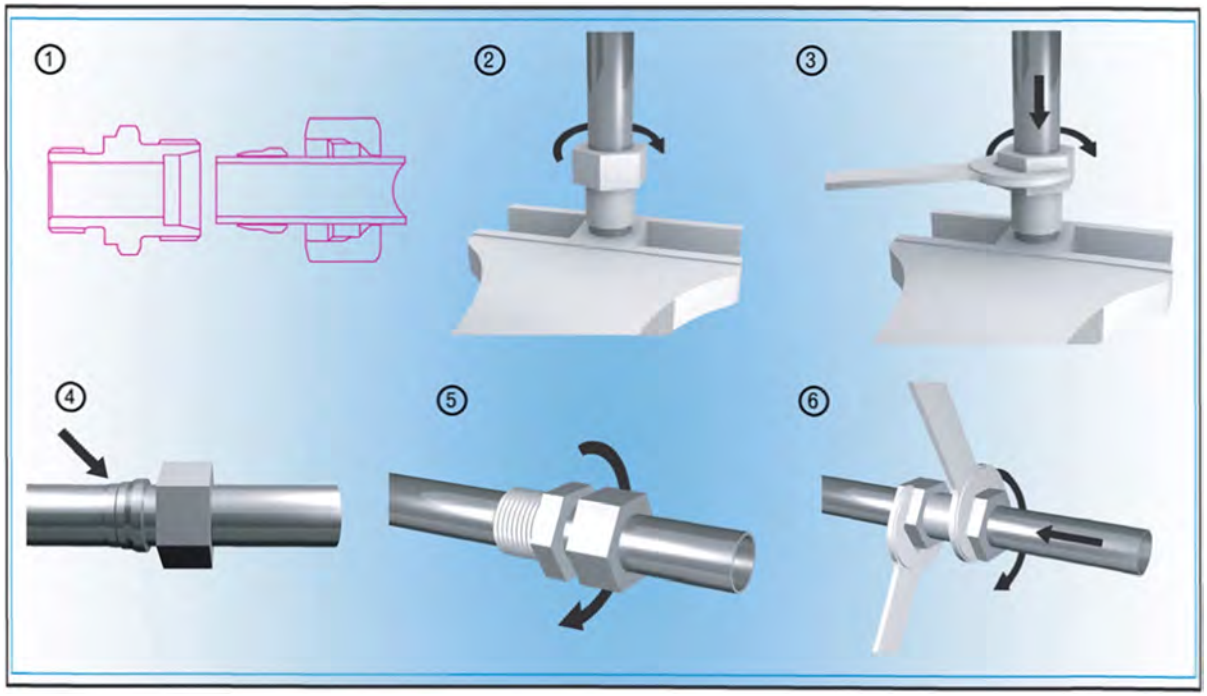

Metric Bite Type Fittings

Manual installation
-single-bite and double-bite rings

1 - Push the nut and the cutting ring onto the pipe.
2- Screw on the nut until contact is detected.
3- Press the pipe against the stop in the coupling body for correct pipe incision. With a wrench, thghten the nut approximately 1 1/2 turns, whilst holding the coupling body in position.
4- Checking: Disassemble the tube connection by slackening the nut. A visible cut edge must be apparent in front of the cutting ring. The cutting ring may rotate, but will not permit axial displacement.

Re-installation
For re-installation, tighten the nut with the same torque as the initial installation. For this, screw on the nut until contact is apparent, then tighten approximately 1/8 turn with a wrench.

Manual installation
- DiNova ring

F-008

1 - Push the nut and the DiNova ring onto the pipe.
2- Screw on the nut until contact is noticeable.
3- With the help of the wrench, tighten the nut until contact is perceptible, that is, approximately 1 3/4 turns.
4- Checking: Disassemble the connection by slackening the nut. A visible cut edge must be apparent in front of the cutting ring.

Re-installation
Screw on then tighten by wrench, until contact is detected (approximately 1/6 turn).

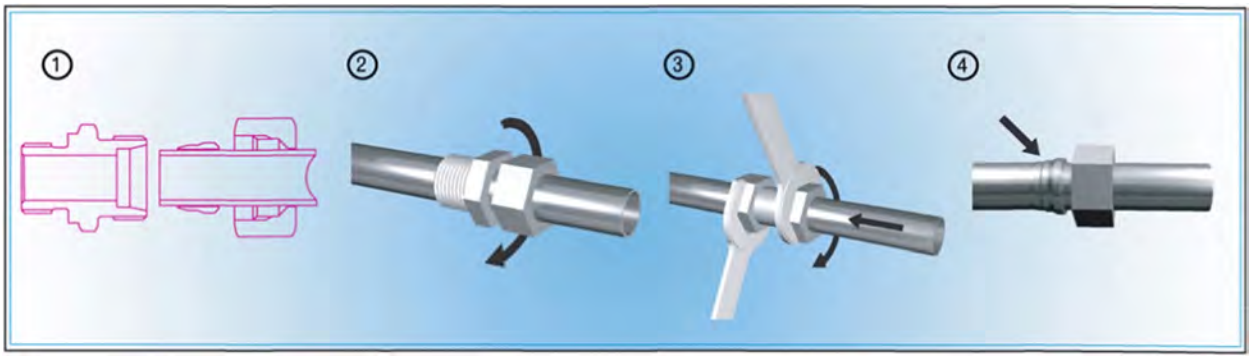

Hexagonal Bulkhead Nut
D8002 Series

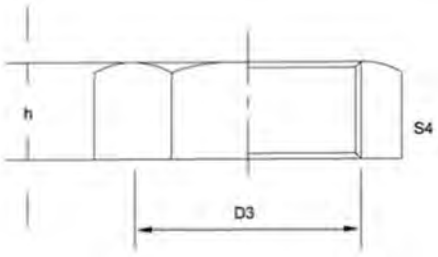

PART NO. SIZE	TUBE 0.0	03 THD	h THK	S4 HEX
08002-16x1.5	10	M16 x 1.5	6	22
08002-18x1.5	12	M18 x 1.5	6	24
D8002-22 x 1.5	15	M22 x 1.5	7	30

Tube Plug
D8003 Series

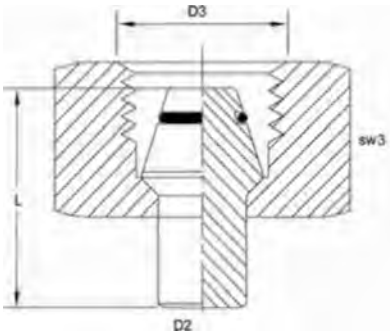

PART NO. SIZE	02 TUBE 0.0	03 THREAD	L LGTH	SW3 HEX
D8003-L06	6	M12 x 1.5	18.5	14
D8003-L08	8	M14 x 1.5	18.5	17
D8003-L10	10	M16 x 1.5	20.0	19
D8003-L12	12	M18 x 1.5	20.5	22
D8003-L15	15	M22 x 1.5	20.5	27
D8003 L18	18	M26 x 1.5	22.5	32
D8003-L22	22	M30 x 2	25.0	36
D8003-L28	28	M36 x 2	25.5	41
D8003-L35	35	M45 x 2	30.0	50
D8003-L42	42	M52 x 2	30.0	60
D8003-S06	6	M14 x 1.5	18.5	17
D8003-S08	8	M16 x 1.5	18.5	19
D8003-S10	10	M18 x 1.5	20.0	22
D8003-S12	12	M20 x 1.5	20.5	24
D8003-S14	14	M22 x 1.5	22.5	27
D8003-S16	16	M24 x 1.5	23.5	30
D8003-S20	20	M30 x 2	28.5	36
D8003-S25	25	M36 x 2	29.0	46
D8003-S30	30	M42 x 2	30.5	50
D8003-S38	38	M52 x 2	33.0	60

Metric Bite Type Fittings

Tube Cap
D8004 Series

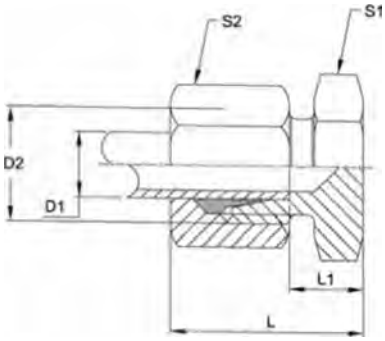

PART NO. SIZE	D1 TUBE 0.0	02 THREAD	LI LGTH	L LGTH	SI HEX	SZ HEX
D8004-L06	06	M12 x 1.5	7.0	21.5	12.0	14.0
D8004-L08	08	M14 x 1.5	8.0	22.5	14.0	17.0
D8004-L10	10	M16 x 1.5	9.0	23.5	17.0	19.0
D8004-L12	12	M18 x 1.5	10.0	24.5	19.0	22.0
D8004-L15	15	M22 x 1.5	11.0	26.0	24.0	27.0
D8004-L18	18	M26 x 1.5	11.5	27.5	27.0	32.0
D8004-L22	22	M30 x 2	13.5	29.5	32.0	36.0
D8004-L28	28	M36 x 2	14.5	31.0	41.0	41.0
D8004-L35	35	M45 x 2	14.5	36.0	46.0	50.0
D8004-L42	42	M52 x 2	16.0	38.5	55.0	60.0
D8004-S06	06	M14 x 1.5	11.0	25.5	14.0	17.0
D8004-S08	08	M16 x 1.5	13.0	27.5	17.0	19.0
D8004-S10	10	M18 x 1.5	12.5	28.5	19.0	22.0
D8004-S12	12	M20 x 1.5	14.5	30.5	22.0	24.0
D8004-S14	14	M22 x 1.5	15.5	33.5	24.0	27.0
D8004-S16	16	M24 x 1.5	15.5	33.5	27.0	30.0
D8004-S20	20	M30 x 2	17.5	39.0	32.0	36.0
D8004-S25	25	M36 x 2	20.0	44.0	41.0	46.0
D8004-S30	30	M42 x 2	20.5	47.0	46.0	50.0
D8004-S38	38	M52 x 2	23.0	53.5	55.0	60.0

Single Bite Ring
D8005 Series

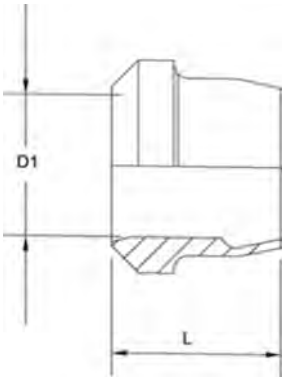

PART NO. SIZE	01 TUBE 0.0	L LGTH
D8005-E04	6	9.5
D8005-E06	8	9.5
D8005-E08	10	10.5
D8005-E10	12	10
D8005-E12	15	10

Double Bite Ring
D8006 Series

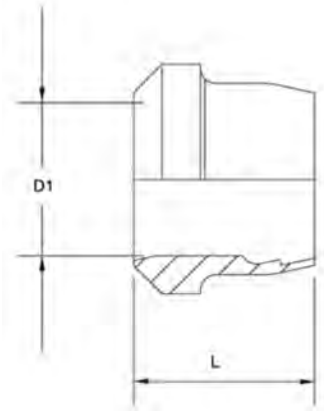

PART NO. SIZE	D1TUBE 0.0	I LOTH
D8006-06	6	9.5
D8006-08	8	9.5
D8006-10	10	10.5
D8006-12	12	10.0
D8006-14	14	10.0
D8006-15	15	10.0
D8006-16	16	10.5
D8006-18	18	10.0
D8006-20	20	12.5
D8006-22	22	10.5
D8006-25	25	12.5
D8006-28	28	10.5
D8006-30	30	13.0
D8006-35	35	13.5
D8006-38	38	13.5
D8006-42	42	13.5

DiNova Bite Ring
D8007 Series

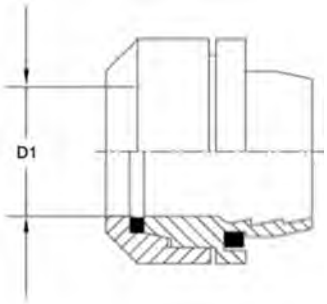

PART NO. SIZE	01 TUBE 0.0
D8007-06	6
D8007-08	8
D8007-10	10
D8007-12	12
D8007-14	14
D8007-15	15
D8007-16	16
D8007-18	18
D8007-20	20
D8007-22	22
D8007-25	25
D8007-28	28
D8007-30	30
D8007-35	35
D8007-38	38
D8007-42	

Metric Bite Type Fittings

Tube Nut
D8008 Series

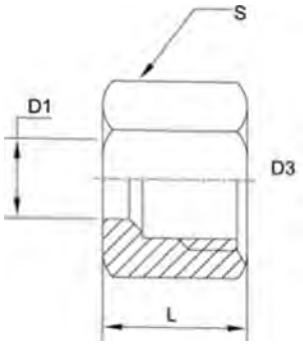

PART NO. SIZE	D1 TUBE 0.0	03 THREAD	I LGTH	S HEX
D8008-E04	4	M8 x 1	11.5	10.0
D8008-E05	5	MIOxI	12.0	12.0
D8008-E06	6	MIOxI	12.0	12.0
D8008-E08	8	M12 x 1	12.5	14.0
D8008-E10	10	M14 x 1	13.0	17.0
D8008-E12	12	M16 x 1	13.0	19.0
D8008-L06	6	M12 x 1.5	15.0	14.0
D8008-L08	8	M14 x 1.5	15.0	17.0
D8008-L10	10	M16 x 1.5	16.0	19.0
D8008-L12	12	M18 x 1.5	16.0	22.0
D8008-L15	15	M22 x 1.5	17.5	27.0
D8008-L18	18	M26 x 1.5	18.5	32.0
D8008-L22	22	M30 x 2	20.5	36.0
D8008-L28	28	M36 x 2	21.5	41.0
D8008-L35	35	M45 x 2	24.5	50.0
D8008-L42	42	M52 x 2	24.5	60.0
D8008-S06	6	M14 x 1.5	17.0	17.0
D8008-S08	8	M16 x 1.5	17.0	19.0
D8008-S10	10	M18 x 1.5	18.0	22.0
D8008-S12	14	M20 x 1.5	18.0	24.0
D8008-S14	14	M22 x 1.5	21.0	27.0
D8008-S16	16	M24 x 1.5	21.0	30.0
D8008-S20	20	M30x2	24.5	36.0
D8008-S25	25	M36 x 2	27.5	46.0
D8008-S30	30	M42 x 2	29.5	50.0
D8008-S38	38	M52 x 2	33.0	60.0

Gauge Coupling BSP
Body Only
D8020 Series

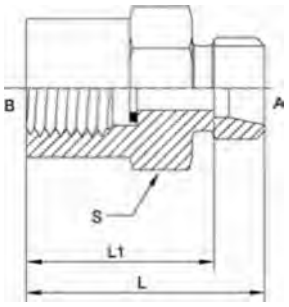

PART NO. SIZE	A TUBE O.D	A THREAD	B BSPP	A DRILL	11 LGTH	L LGTH	S HEX
D8020-L06-04	6	M12x 1.5	1/4-19	4.0	28.0	35.0	19.0
D8020-L08-04	8	M14x 1.5	1/4-19	6.0	28.0	35.0	19.0
D8020-S06-08	6	M14 x 1.5	1/2-14	4.0	38.0	45.0	27.0
D8020-S08-08	8	M16x 1.5	1/2-14	5.0	38.0	45.0	27.0
D8020-S10-08	10	M18 x 1.5	1/2-14	7.0	37.5	45.0	27.0
D8020-S12-08	12	M20x 1.5	1/2-14	8.0	37.5	45.0	27.0

Gauge Coupling BSP
D8020-NBR Series

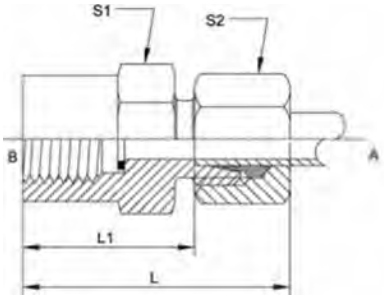

PART NO. SIZE	A TUBE O.D	A THREAO	B BSPP	A DRILL	11 LGTH	I LGTH	SI HEX	S2 HEX
D8020-L06-04-N BR	6	M12 x 1.5	1/4-19	4.0	28.0	42.5	19.0	14.0
D8020-L08-04-NBR	8	M14x 1.5	1/4-19	6.0	28.0	42.5	19.0	17.0
D8020-S06-08-N BR	6	M14x 1.5	1/2-14	4.0	38.0	52.5	27.0	17.0
D8020-S08-08-N BR	8	M16x 1.5	1/2-14	5.0	38.0	52.5	27.0	19.0
D8020-S10-08-N BR	10	M18 x 1.5	1/2-14	7.0	37.5	53.5	27.0	22.0
D8020-S12-08-NBR	12	M20x 1.5	1/2-14	8.0	37.5	53.5	27.0	24.0

Metric Bite Type Fittings

Gauge Coupling
Male Stud Standpipe Type
D8021 Series

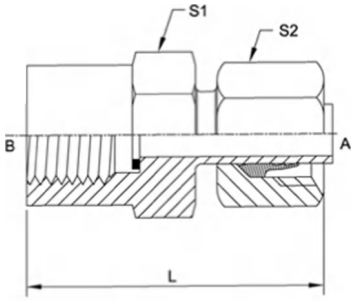

PART NO. SIZE	A TUBE O.D	A THD	B BSPP	A DRILL	L LOTH	SI HEX	S2 HEX
D8021-L08-04	8	M14 x 1.5	1/4-19	4.5	44.5	19.0	17.0
D8021-S06-04	6	M14 x 1.5	1/4-19	3.5	48.0	19.0	17.0
D8021-S06-08	6	M14 x 1.5	1/2-14	3.5	52.0	27.0	17.0
D8021-S08-08	8	M16 x 1.5	1/2-14	4.5	52.5	27.0	19.0
D8021-S10-08	10	M18 x 1.5	1/2-14	7.0	54.5	27.0	22.0
D8021-S12-08	12	M20 x 1.5	1/2-14	6.5	54.5	27.0	24.0

Straight Male Stud Coupling Metric Parallel Sealing Bite
D8030-NBR Series

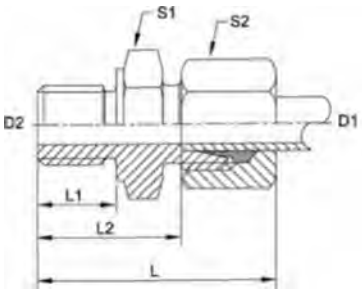

PART NO. SIZE	D1 TUBE O.D	01 THO	02 THD	01 DRILL	02 DRILL	LI LOTH	L2 LOTH	I LOTH	SI HEX	S2 HEX
D8030-L06-10-N BR	6	M12 x 1.5	MIOxI	4.0	4.0	8.0	16.5	31.0	14.0	14.0
D8030-L08-12-N BR	8	M14 x 1.5	M12 x 1.5	6.0	6.0	12.0	22.0	36.5	17.0	17.0
D8030-L10-14-NBR	10	M16 x 1.5	M14 x 1.5	8.0	7.0	12.0	23.0	37.5	19.0	19.0
D8030-L15-18-NBR	15	M22 x 1.5	M18 x 1.5	12.0	11.0	12.0	25.5	40.5	24.0	27.0
D8030-L15-22-N BR	15	M22 x 1.5	M22 x 1.5	12.0	14.0	14.0	29.0	44.0	27.0	27.0
D8030-L22-26-NBR	22	M30 x 2	M26 x 1.5	19.0	18.0	16.0	32.5	48.5	32.0	36.0
D8030-L28-33-N BR	28	M36 x 2	M33 x 2	24.0	23.0	18.0	35.5	52.0	41.0	41.0
D8030-S06-12-N BR	6	M14 x 1.5	M12 x 1.5	4.0	4.0	12.0	25.0	39.5	17.0	17.0
D8030-S16-22-N BR	16	M24 x 1.5	M22 x 1.5	12.0	12.0	14.0	32.5	50.5	27.0	30.0

Straight Male Stud Coupling Metric Parallel • Elastomer Seal Body Only
D8031 Series

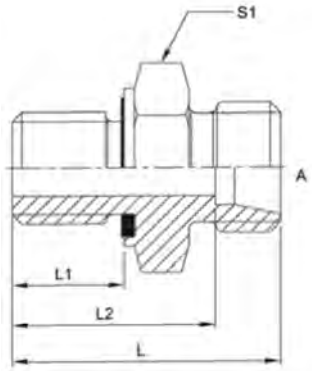

F-015

PART NO. SIZE	A TUBE 0.0	A THD	B THD	A DRILL	B DRILL	LI LOTH	L2 LOTH	L LOTH	SI HEX
D8031-L06-10-0	6	M12 x 1.5	MIOxI	4.0	4.0	8.0	16.5	23.5	14.0
D8031-L08-12-0	8	M14 x 1.5	M12 x 1.5	6.0	6.0	12.0	22.0	29.0	17.0
D8031-L08-14-0	8	M14 x 1.5	M14 x 1.5	6.0	7.0	12.0	22.0	29.0	19.0
D8031-L10-14-0	10	M16 x 1.5	M14x 1.5	8.0	7.0	12.0	23.0	30.0	19.0
D8031-L12-14-O	12	M18x 1.5	M14 x 1.5	10.0	7.0	12.0	23.0	30.0	19.0
D8031-L12-16-O	12	M18 x 1.5	M16x 1.5	10.0	9.0	12.0	24.5	31.5	22.0
D8031-L12-18-O	12	M18 x 1.5	M18 x 1.5	10.0	11.0	12.0	24.5	31.5	24.0
D8031-L15-16-O	15	M22 x 1.5	M16 x 1.5	12.0	9.0	12.0	23.0	30.0	24.0
D8031-L15-18-O	15	M22 x 1.5	M18 x 1.5	12.0	11.0	12.0	25.5	32.5	24.0
D8031-LI 5-22-0	15	M22 x 1.5	M22 x 1.5	12.0	14.0	14.0	29.0	36.0	27.0
D8031 -LI 8-22-0	18	M26 x 1.5	M22 x 1.5	15.0	14.0	14.0	28.5	36.0	27.0
D8031-L22-22-O	22	M30 x 2	M22 x 1.5	19.0	14.0	14.0	27.5	35.0	32.0
D8031-L22-26-O	22	M30 x 2	M26 x 1.5	19.0	18.0	16.0	32.5	40.0	32.0
D8031-L28-33-O	28	M36 x 2	M33 x 2	24.0	23.0	18.0	35.5	43.0	41.0
D8031-L35-42-O	35	M45 x 2	M42 x 2	30.0	30.0	20.0	37.5	48.0	50.0
D8031-L42-48-O	42	M52 x 2	M48 x 2	36.0	36.0	22.0	41.0	52.0	55.0
D8031-S06-12-0	6	M14 x 1.5	M12 x 1.5	4.0	4.0	12.0	25.0	32.0	17.0
D8031-S08-14-0	8	M16 x 1.5	M14 x 1.5	5.0	5.0	12.0	27.0	34.0	19.0
D8031-S10-16-0	10	M18 x 1.5	M16 x 1.5	7.0	7.0	12.0	27.0	34.5	22.0
D8031-S12-18-O	12	M20 x 1.5	M18 x 1.5	8.0	8.0	12.0	29.0	36.5	24.0
D8031-SI 4-20-0	14	M22 x 1.5	M20 x 1.5	10.0	10.0	14.0	32.5	41.0	27.0
D8031-SI 6-22-0	16	M24 x 1.5	M22 x 1.5	12.0	12.0	14.0	32.5	41.0	27.0
D8031-S20-27-0	20	M30 x 2	M27 x 1.5	16.0	16.0	16.0	36.5	47.0	32.0
D8031-S25-33-O	25	M36 x 2	M33 x 2	20.0	20.0	18.0	41.0	53.0	41.0
D8031-S30-42-0	30	M42 x 2	M42 x 2	25.0	25.0	20.0	43.5	57.0	50.0
D8031-S38-48-0	38	M52 x 2	M48 x 2	32.0	32.0	22.0	48.0	64.0	55.0

Metric Bite Type Fittings

Straight Male Stud Coupling Metric Parallel Elastomer Seal
D8031-NBR Series

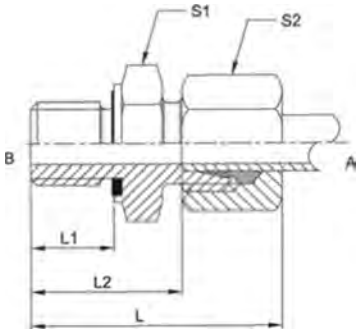

PART NO. SIZE	A TUBE 0.0	A THD	B TOO	A DRILL	B DRILL	LI LOTH	L2 LEITH	I LOTH	SI HEX	S2 HEX
D8031-L06-10-O-N BR	6	M12x 1.5	MIOxI	4.0	4.0	8.0	16.5	31.0	14.0	14.0
D8031-L08-12-0-NBR	8	M14x 1.5	M12 x 1.5	6.0	6.0	12.0	22.0	36.5	17.0	17.0
D8031-L08-14-O-N BR	8	M14x 1.5	M14x 1.5	6.0	7.0	12.0	22.0	36.5	19.0	17.0
D8031 -LI 0-14-O-N BR	10	M16x 1.5	M14 x 1.5	8.0	7.0	12.0	23.0	37.5	19.0	19.0
D8031 -LI 2-14-O-N BR	12	M18x 1.5	M14 x 1.5	10.0	7.0	12.0	23.0	37.5	19.0	22.0
D8031-L12-16-O-NBR	12	M18x 1.5	M16x 1.5	10.0	9.0	12.0	24.5	39.0	22.0	22.0
D8031 -LI 2-18-O-N BR	12	M18x 1.5	M18 x 1.5	10.0	11.0	12.0	24.5	39.0	24.0	22.0
D8031 -LI 5-16-O-N BR	15	M22x 1.5	M16 x 1.5	12.0	9.0	12.0	23.0	38.0	24.0	27.0
D8031-LI 5-18-O-N BR	15	M22 x 1.5	M18x 1.5	12.0	11.0	12.0	25.5	40.5	24.0	27.0
D8031 -LI 5-22-O-N BR	15	M22x 1.5	M22 x 1.5	12.0	14.0	14.0	29.0	44.0	27.0	27.0
D8031 -LI 8-22-O-N BR	18	M26x 1.5	M22x 1.5	15.0	14.0	14.0	28.5	44.5	27.0	32.0
D8031-L22-22-O-NBR	22	M30 x 2	M22 x 1.5	19.0	14.0	14.0	27.5	43.5	32.0	36.0
D8031-L22-26-0-N BR	22	M30 x 2	M26 x 1.5	19.0	18.0	16.0	32.5	48.5	32.0	36.0
D8031-L28-33-O-NBR	28	M36 x 2	M33 x 2	24.0	23.0	18.0	35.5	52.0	41.0	41.0
D8031-L35-42-0-N BR	35	M45 x 2	NI42 x 2	30.0	30.0	20.0	37.5	59.0	50.0	50.0
D8031-L42-48-O-NBR	42	M52 x 2	M48 x 2	36.0	36.0	22.0	41.0	63.5	55.0	60.0
D8031-S06-12-O-N BR	6	M14 x 1.5	M12 x 1.5	4.0	4.0	12.0	25.0	39.5	17.0	17.0
D8031-S08-14-O-N BR	8	M16 x 1.5	M14 x 1.5	5.0	5.0	12.0	27.0	41.5	19.0	19.0
D8031 -SI 0-16-O-N BR	10	M18 x 1.5	M16 x 1.5	7.0	7.0	12.0	27.0	43.0	22.0	22.0
D8031-SI 2-18-O-N BR	12	M20 x 1.5	M18 x 1.5	8.0	8.0	12.0	29.0	45.0	24.0	24.0
D8031-S14-20-0-NBR	14	M22 x 1.5	M20 x 1.5	10.0	10.0	14.0	32.5	50.5	27.0	27.0
D8031 -SI 6-22-O-N BR	16	M24 x 1.5	M22 x 1.5	12.0	12.0	14.0	32.5	50.5	27.0	30.0
D8031-S20-27-O-N BR	20	M30 x 2	M27 x 1.5	16.0	16.0	16.0	36.5	58.0	32.0	36.0
D8031-S25-33-O-NBR	25	M36 x 2	M33 x 2	20.0	20.0	18.0	41.0	65.0	41.0	46.0
D8031-S30-42-O-NBR	30	M42 x 2	M42 x 2	25.0	25.0	20.0	43.5	70.0	50.0	50.0
D8031-S38-48-O-NBR	38	M52 x 2	M48 x 2	32.0	32.0	22.0	48.0	78.5	55.0	60.0

Straight Male Stud Coupling ISO 6149 O-ring Seal
D8032 Series

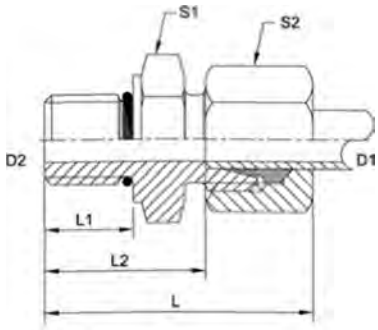

PART NO. SIZE	01 TUBE 0.0	01 TH0	02 TH0	01 DRILL	02 DRILL	LI LGTH	12 LOTH	I LGTH	SI HEX	S2 HEX
D8032-L06-10-O-N BR	6	M12 x 1.5	M10 x 1	4.0	4.5	9.5	18.0	32.5	14.0	14.0
D8032-L08-12-0-NBR	8	M14 x 1.5	M12 x 1.5	6.0	6.0	11.0	21.0	35.5	17.0	17.0
D8032-L12-16-O-NBR	12	M18 x 1.5	M16 x 1.5	10.0	9.0	12.5	25.0	39.5	22.0	22.0
D8032-L15-18-O-NBR	15	M22 x 1.5	M18 x 1.5	12.0	11.0	14.0	27.5	42.5	24.0	27.0
D8032-L18-18-O-NBR	18	M26 x 1.5	M18 x 1.5	15.0	11.0	14.0	25.5	41.5	24.0	32.0
D8032-L18-22-O-N BR	18	M26 x 1.5	M22 x 1.5	15.0	14.0	15.0	29.5	45.5	27.0	32.0
D8032-L22-27-O-NBR	22	M30 x 2	M27 x 2	19.0	18.0	18.5	35.0	51.0	32.0	36.0
D8032-L28-33-O-NBR	28	M36 x 2	M33 x 2	24.0	23.0	18.5	36.0	52.5	41.0	41.0
D8032-L35-42-O-NBR	35	M45 x 2	M42 x 2	30.0	30.0	19.0	36.5	58.0	50.0	50.0
D8032-S06-12-0-NBR	6	M14 x 1.5	M12 x 1.5	4.0	4.0	11.0	24.0	38.5	17.0	17.0
D8032-S08-14-0-NBR	8	M16 x 1.5	M14 x 1.5	5.0	6.0	11.0	26.0	40.5	19.0	19.0
D8032-S10-16-0-NBR	10	M18 x 1.5	M16 x 1.5	7.0	7.0	12.5	27.5	43.5	22.0	22.0
D8032-S12-18-O-NBR	12	M20 x 1.5	M18 x 1.5	8.0	9.0	14.0	31.0	47.0	24.0	24.0
D8032-S16-22-O-NBR	16	M24x 1.5	M22 x 1.5	12.0	12.0	15.0	33.5	51.5	27.0	30.0
D8032-S20-27-O-NBR	20	M30 x 2	M27 x 2	16.0	15.0	18.5	39.0	60.5	32.0	36.0
D8032-S25-33-O-NBR	25	M36 x 2	M33 x 2	20.0	20.0	18.5	41.5	65.5	41.0	46.0

Female Stud Coupling Metric Body Only
D8034 Series

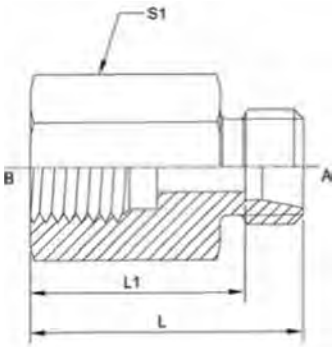

PART NO. SIZE	A TUBE 0.0	A THD	B THD	A DRILL	LI LGTH	L LGTH	SI HEX
D8034-L08-12	8	M14 x 1.5	M12 x 1.5	6.0	24.0	31.0	17.0
D8034-L08-22	8	M14 x 1.5	M22 x 1.5	6.0	28.0	35.0	30.0
D8034-L10-12	10	M16 x 1.5	M12 x 1.5	8.0	25.0	32.0	17.0
D8034-L10-14	10	M16 x 1.5	M14x 1.5	8.0	25.0	32.0	19.0
D8034-L12-16	12	M18 x 1.5	M16 x 1.5	10.0	26.0	33.0	22.0
D8034-L12-22	12	M18 x 1.5	M22 x 1.5	10.0	29.0	36.0	30.0
D8034-L15-18	15	M22 x 1.5	M18 x 1.5	12.0	28.0	35.0	24.0
D8034-L18-22	18	M26 x 1.5	M22 x 1.5	15.0	29.5	37.0	30.0
D8034-L22-26	22	M30 x 2	M26 x 1.5	19.0	34.5	42.0	32.0
D8034-S06-12	6	M14 x 1.5	M12 x 1.5	4.0	26.0	33.0	17.0
D8034-S08-14	8	M16 x 1.5	M14 x 1.5	5.0	26.0	33.0	19.0
D8034-S10-16	10	M18 x 1.5	M16 x 1.5	7.0	26.5	34.0	22.0
D8034-S12-18	12	M20 x 1.5	M18 x 1.5	8.0	27.5	35.0	24.0
D8034-S14-20	14	M22 x 1.5	M20 x 1.5	10.0	31.0	39.5	27.0
D8034-S16-22	16	M24 x 1.5	M22 x 1.5	12.0	30.5	39.0	30.0
D8034-S20-27	20	M30 x 2	M27 x 2	16.0	34.5	45.0	36.0

Metric Bite Type Fittings

Female Stud Coupling Metric

SZ034TNBR Series

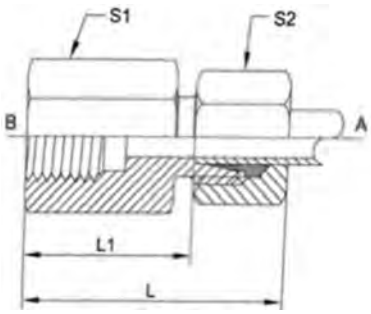

PART NO. SIZE	A TUBE 0.0	A THD	B THD	A DRILL	11 LGTH	L LGTH	SI HEX	S2 HEX
D8034-L08-12-NBR	8	M14 x 1.5	M12 x 1.5	6.0	24.0	38.5	17.0	17.0
D8034-L08-22-N BR	8	M14x 1.5	M22 x 1.5	6.0	28.0	42.5	30.0	17.0
D8034-L10-12-NBR	10	M16 x 1.5	M12 x 1.5	8.0	25.0	39.5	17.0	19.0
D8034-L10-14-NBR	10	M16 x 1.5	M14 x 1.5	8.0	25.0	39.5	19.0	19.0
D8034-L12-16-NBR	12	M18 x 1.5	M16 x 1.5	10.0	26.0	40.5	22.0	22.0
D8034-L12-22-NBR	12	M18 x 1.5	M22 x 1.5	10.0	29.0	43.5	30.0	22.0
D8034-L15-18-NBR	15	M22 x 1.5	M18 x 1.5	12.0	28.0	43.0	24.0	27.0
D8034-L18-22-NBR	18	M26 x 1.5	M22 x 1.5	15.0	29.5	45.5	30.0	32.0
D8034-L22-26-NBR	22	M30 x 2	M26x 1.5	19.0	34.5	50.5	32.0	36.0
D8034-S06-12-N BR	6	M14 x 1.5	M12 x 1.5	4.0	26.0	40.5	17.0	17.0
D8034-S08-14-NBR	8	M16 x 1.5	M14 x 1.5	5.0	26.0	40.5	19.0	19.0
D8034-S10-16-NBR	10	M18 x 1.5	M16 x 1.5	7.0	26.5	42.5	22.0	22.0
D8034-S12-18-NBR	12	M20 x 1.5	M18 x 1.5	8.0	27.5	43.5	24.0	24.0
D8034-S14-20-NBR	14	M22x 1.5	M20x 1.5	10.0	31.0	49.0	27.0	27.0
D8034-S16-22-NBR	16	M24x 1.5	M22x 1.5	12.0	30.5	48.5	30.0	30.0
D8034-S20-27-NBR	20	M30 x 2	M27 x 2	16.0	34.5	56.0	36.0	36.0

Straight Stud Standpipe Adapter Metric Parallel Elastomer Seal

D8036 Series

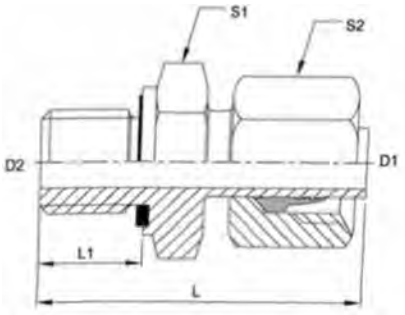

PAST NO. SIZE	01 TUBE 0.0	01 THD	02 TUD	01 DRILL	02 DRILL	LI LOTH	I LGTH	SI HEX	S2 HEX
D8036-L10-14-0	10	M16x 1.5	M14 x 1.5	7.5	7.5	12	39.5	19	19
D8036-L12-16-O	12	M18 x 1.5	M16 x 1.5	9	9	12	42.5	22	22
D8036-S08-14-0	8	M16 x 1.5	M14 x 1.5	4.5	4.5	12	41.5	19	19
D8036-S10-16-0	10	M18x 1.5	M16 x 1.5	6.5	6.5	12	44	22	22
D8036-S12-18-O	12	M20 x 1.5	M18 x 1.5	7.5	7.5	12	46	24	24

Straight Male Stud Coupling BSPP Sealing Bite Body Only
D8040 Series

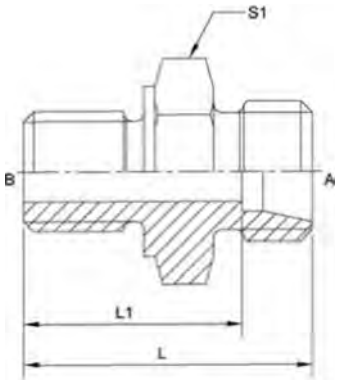

PART NO. SIZE	A TUBE 0.0	A THD	B BSPP	« DRILL	B DRILL	LI LGTH	I LGTH	SI HEX
D8040-L06-02	6	M12 x 1.5	G 1/8 A	4.0	4.0	16.5	23.5	14.0
D8040-L06-04	6	M12 x 1.5	G 1/4 A	4.0	6.0	22.0	29.0	19.0
D8040-L08-02	8	M14 x 1.5	G 1/8 A	6.0	4.0	16.5	23.5	14.0
D8040-L08-04	8	M14 x 1.5	G 1/4 A	6.0	6.0	22.0	29.0	19.0
D8040-L08-06	8	M14 x 1.5	G 3/8 A	6.0	9.0	23.5	30.5	22.0
D8040 L08-08	8	M14 x 1.5	G 1/2 A	6.0	14.0	26.0	33.0	27.0
D8040-L10-02	10	M16 x 1.5	G 1/8 A	8.0	4.0	17.0	24.0	17.0
D8040-L10-04	10	M16 x 1.5	G 1/4 A	8.0	6.0	23.0	30.0	19.0
D8040-L10-06	10	M16 x 1.5	G 3/8 A	8.0	9.0	24.5	31.5	22.0
D8040-L10-08	10	M16 x 1.5	G 1/2 A	8.0	14.0	27.0	34.0	27.0
D8040-L12-04	12	M18 x 1.5	G 1/4 A	10.0	6.0	23.0	30.0	19.0
D8040-L12-06	12	M18 x 1.5	G 3/8 A	10.0	9.0	24.5	31.5	22.0
D8040-L12-08	12	M18 x 1.5	G 1/2 A	10.0	14.0	27.0	34.0	27.0
D8040-L12-12	12	M18 x 1.5	G 3/4 A	10.0	18.0	30.0	37.0	32.0
D8040-L15-06	15	M22 x 1.5	G 3/8 A	12.0	9.0	23.0	30.0	24.0
D8040-L15-08	15	M22 x 1.5	G 1/2 A	12.0	14.0	28.0	35.0	27.0
D8040-L18-08	18	M26x 1.5	G 1/2 A	15.0	14.0	28.5	36.0	27.0
D8040-L22-12	22	M30 x 2	G 3/4 A	19.0	18.0	32.5	40.0	32.0
D8040-L28-16	28	M36x2	G 1 A	24.0	23.0	35.5	43.0	41.0
D8040-L35-20	35	M45 x 2	G 1-1/4 A	30.0	30.0	37.5	48.0	50.0
D8040-L42-24	42	M52 x 2	G 1-1/2 A	36.0	36.0	41.0	52.0	55.0
D8040S06-04	6	M14 x 1.5	G 1/4 A	4.0	5.0	25.0	32.0	19.0
D8040-S10-06	10	M18x 1.5	G 3/8 A	7.0	8.0	27.0	34.5	22.0
D8040-S12-06	12	M20x 1.5	G 3/8 A	8.0	8.0	29.0	36.5	22.0
D8040-S16-08	16	M24 x 1.5	G 1/2 A	12.0	12.0	32.5	41.0	27.0
D8040-S20-08	20	M30 x 2	G 1/2 A	16.0	12.0	31.5	42.0	32.0
D8040-S25-16	25	M36 x 2	G 1 A	20.0	20.0	41.0	53.0	41.0
D8040-S38-24	38	M52 x 2	G 1-1/2 A	32.0	32.0	48.0	64.0	55.0

Metric Bite Type Fittings

Straight Male Stud Coupling BSPP Sealing Bite
D8040-NBR Series

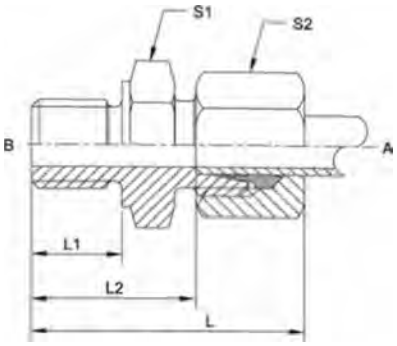

PART NO.SIZE	A TUBE 0.0	A THD	B TUB	A DRILL	B DRILL	LI LGTH	L2 LGTH	I LGTH	Si HEX	S2 HEX
D8040-L06-02-N BR	6	M12 x 1.5	G 1/8 A	4.0	4.0	8.0	16.5	31.0	14.0	14.0
D8040-L06-04-N BR	6	M12 x 1.5	G 1/4 A	4.0	6.0	12.0	22.0	36.5	19.0	14.0
D8040-L08-02-N BR	8	M14x 1.5	G 1/8 A	6.0	4.0	8.0	16.5	31.0	14.0	17.0
D8040-L08-04-N BR	8	M14 x 1.5	G 1/4 A	6.0	6.0	12.0	22.0	36.5	19.0	17.0
D8040-L08-06-N BR	8	M14x 1.5	G 3/8 A	6.0	9.0	12.0	23.5	38.0	22.0	17.0
D8040-L08-08-N BR	8	M14x 1.5	G 1/2 A	6.0	14.0	14.0	26.0	40.5	27.0	17.0
D8040-L10-02-N BR	10	M16x 1.5	G 1/8 A	8.0	4.0	8.0	17.0	31.5	17.0	19.0
D8040-L10-04-N BR	10	M16 x 1.5	G 1/4 A	8.0	6.0	12.0	23.0	37.5	19.0	19.0
D8040-L10-06-N BR	10	M16 x 1.5	G 3/8 A	8.0	9.0	12.0	24.5	39.0	22.0	19.0
D8040-L10-08-N BR	10	M16x 1.5	G 1/2 A	8.0	14.0	14.0	27.0	41.5	27.0	19.0
D8040- LI 2-04-N B R	12	M18 x 1.5	G 1/4 A	10.0	6.0	12.0	23.0	37.5	19.0	22.0
D8040-112-06-N BR	12	M18 x 1.5	G 3/8 A	10.0	9.0	12.0	24.5	39.0	22.0	22.0
D8040-L12-08-NBR	12	M18x 1.5	G 1/2 A	10.0	14.0	14.0	27.0	41.5	27.0	22.0
D8040-L12-12-NBR	12	M18x 1.5	G 3/4 A	10.0	18.0	16.0	30.0	44.5	32.0	22.0
D8040-L15-06-NBR	15	M22 x 1.5	G 3/8 A	12.0	9.0	12.0	23.0	38.0	24.0	27.0
D8040-L15-08-NBR	15	M22x 1.5	G 1/2 A	12.0	14.0	14.0	28.0	43.0	27.0	27.0
D8040-L18-08-NBR	18	M26 x 1.5	G 1/2 A	15.0	14.0	14.0	28.5	44.5	27.0	32.0
D8040-L22-12-NBR	22	M30 x 2	G 3/4 A	19.0	18.0	16.0	32.5	48.5	32.0	36.0
D8040-L28-16-NBR	28	M36 x 2	G 1 A	24.0	23.0	18.0	35.5	52.0	41.0	41.0
D8040-L35-20-NBR	35	M45 x 2	G 1-1/4 A	30.0	30.0	20.0	37.5	59.0	50.0	50.0
D8040-L42-24-NBR	42	M52 x 2	G 1-1/2 A	36.0	36.0	22.0	41.0	63.5	55.0	60.0
D8040-S06-04-NBR	6	M14x 1.5	G 1/4 A	4.0	5.0	12.0	25.0	39.5	19.0	17.0
D8040-S10-06-NBR	10	M18 x 1.5	G 3/8 A	7.0	8.0	12.0	27.0	43.0	22.0	22.0
D8040-S12-06-N B R	12	M20x 1.5	G 3/8 A	8.0	8.0	12.0	29.0	45.0	22.0	24.0
D8040-S16-08-N B R	16	M24 x 1.5	G 1/2 A	12.0	12.0	14.0	32.5	50.5	27.0	30.0
D8040-S20-08-NBR	20	M30 x 2	G 1/2 A	16.0	12.0	14.0	31.5	53.0	32.0	36.0
D8040-S25-16-NBR	25	M36 x 2	G 1 A	20.0	20.0	18.0	41.0	65.0	41.0	46.0
D8040-S38-24-N8R	38	M52 x 2	G 1-1/2 A	32.0	32.0	22.0	48.0	78.5	55.0	60.0

Straight Male Stud Coupling BSPP Elastomer Seal Body Only
D8041 Series

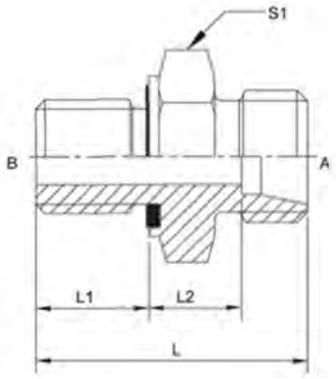

F-021

PART NO. SIZE	A	TUBE O.D	A THD	B BSPP	*k* DRILL	B DRILL	LI LGTH	12 LETH	L LGTH	SI HEX
D8041-L06-02-0		6	M12 x 1.5	G 1/8 A	4.0	4.0	8.0	8.5	23.5	14.0
D8041-L06-04-0		6	M12 x 1.5	G 1/4 A	4.0	6.0	12.0	10.0	29.0	19.0
D8041-L08-02-0		8	M14 x 1.5	G 1/8 A	6.0	4.0	8.0	8.5	23.5	14.0
D8041-L08-04-0		8	M14 x 1.5	G 1/4 A	6.0	6.0	12.0	10.0	29.0	19.0
D8041-L08-06-0		8	M14 x 1.5	G3/8A	6.0	9.0	12.0	11.5	30.5	22.0
D8041-LI 0-04-0		10	M16x 1.5	G 1/4 A	8.0	6.0	12.0	11.0	30.0	19.0
D8041-LI 0-06-0		10	M16 x 1.5	G 3/8 A	8.0	9.0	12.0	12.5	31.5	22.0
D8041 -LI 0-08-0-N DV		10	M16 x 1.5	G 1/2 A	8.0	14.0	14.0	13.0	34.0	27.0
D8041-LI 2-04-0		12	M18 x 1.5	G 1/4 A	10.0	6.0	12.0	11.0	30.0	19.0
D8041-LI 2-06-0		12	M18 x 1.5	G 3/8 A	10.0	9.0	12.0	12.5	31.5	22.0
D8041-LI 2-08-0		12	M18 x 1.5	G 1/2 A	10.0	14.0	14.0	13.0	34.0	27.0
D8041-L15-06-0		15	M22 x 1.5	G 3/8 A	12.0	9.0	12.0	11.0	30.0	24.0
D8041-LI 5-08-0		15	M22 x 1.5	G 1/2 A	12.0	14.0	14.0	14.0	35.0	27.0
D8041-LI 8-08-0		18	M26 x 1.5	G 1/2 A	15.0	14.0	14.0	14.5	36.0	27.0
D8041-L22-08-O-N DV		22	M30x2	G 1/2 A	19.0	14.0	14.0	13.5	35.0	32.0
D8041-L22-12-O		22	M30 x 2	G 3/4 A	19.0	18.0	16.0	16.5	40.0	32.0
D8041-L22-16-0-N DV		22	M30 x 2	G 1 A	19.0	23.0	18.0	17.5	43.0	41.0
D8041-L28-16-O		28	M36 x 2	G 1 A	24.0	23.0	18.0	17.5	43.0	41.0
D8041-L35-20-0		35	M45 x 2	G 1-1/4 A	30.0	30.0	20.0	17.5	48.0	50.0
D8041-L42-24-O		42	M52 x 2	G 1-1/2 A	36.0	36.0	22.0	19.0	52.0	55.0
D8041-S06-04-0		6	M14 x 1.5	G 1/4 A	4.0	5.0	12.0	13.0	32.0	19.0
D8041-S08-04-0		8	M16 x 1.5	G 1/4 A	5.0	5.0	12.0	15.0	34.0	19.0
D8041-SI 0-04-0		10	M18 x 1.5	G 1/4 A	7.0	5.0	12.0	12.5	32.0	19.0
D8041-SI 0-06-0		10	M18 x 1.5	G 3/8 A	7.0	8.0	12.0	15.0	34.5	22.0
D8041-SI 2-04-0		12	M20 x 1.5	G 1/4 A	8.0	5.0	12.0	14.5	34.0	22.0
D8041-S12-06-0		12	M20 x 1.5	G 3/8 A	8.0	8.0	12.0	17.0	36.5	22.0
D8041-S12-08-0		12	M20 x 1.5	G 1/2 A	8.0	12.0	14.0	17.5	39.0	27.0
D8041 -SI 4-08-0		14	M22 x 1.5	G 1/2 A	10.0	12.0	14.0	18.5	41.0	27.0
D8041-S16-08-0		16	M24 x 1.5	G 1/2 A	12.0	12.0	14.0	18.5	41.0	27.0
D8041-S16-12-O		16	M24 x 1.5	G 3/4 A	12.0	16.0	16.0	20.5	45.0	32.0
D8041-S20-08-0		20	M30 x 2	G 1/2 A	16.0	12.0	14.0	17.5	42.0	32.0
D8041-S20-12-0		20	M30 x 2	G 3/4 A	16.0	16.0	16.0	20.5	47.0	32.0
D8041-S25-12-O		25	M36 x 2	G 3/4 A	20.0	16.0	16.0	20.0	48.0	41.0
D8041-S25-16-O		25	M36 x 2	G 1 A	20.0	20.0	18.0	23.0	53.0	41.0
D8041-S30-20-0		30	M42 x 2	G 1-1/4 A	25.0	25.0	20.0	23.5	57.0	50.0
D8041-S38-24-O		38	M52 x 2	G 1-1/2 A	32.0	32.0	22.0	26.0	64.0	55.0

Metric Bite Type Fittings

Straight Male Stud Coupling BSPP Elastomer Seal
D8041-NBR Series

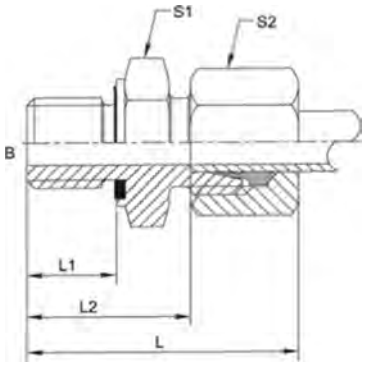

PART NO. SIZE	A	TUBE 0.0	A THD	B THD	A DRILL	B DRILL	LI LOTH	L2 LOTH	L LOTH	SI HEX	S2 HEX
D8041-L06-02-0-N BR		6	M12x 1.5	G 1/8 A	4.0	4.0	8.0	16.5	31.0	14.0	14.0
D8041-L06-04-0-N BR		6	M12 x 1.5	G 1/4 A	4.0	6.0	12.0	22.0	36.5	19.0	14.0
D8041-L08-02-0-N BR		8	M14x 1.5	G 1/8 A	6.0	4.0	8.0	16.5	31.0	14.0	17.0
D8041 - L08-04-0- N BR		8	M14x 1.5	G 1/4 A	6.0	6.0	12.0	22.0	36.5	19.0	17.0
D8041-L08-06-0-NBR		8	M14 x 1.5	G 3/8 A	6.0	9.0	12.0	23.5	38.0	22.0	17.0
D8041-L10-04-0-NBR		10	M16x 1.5	G 1/4 A	8.0	6.0	12.0	23.0	37.5	19.0	19.0
D8041-L10-06-0-NBR		10	M16x 1.5	G 3/8 A	8.0	9.0	12.0	24.5	39.0	22.0	19.0
D8041 -LI 0-08-0-N DV		10	M16x 1.5	G 1/2 A	8.0	14.0	14.0	27.0	41.5	27.0	19.0
D8041 -LI 2-04-O-N BR		12	M18 x 1.5	G 1/4 A	10.0	6.0	12.0	23.0	37.5	19.0	22.0
D8041 -LI 2-06-O-N BR		12	M18x 1.5	G 3/8 A	10.0	9.0	12.0	24.5	39.0	22.0	22.0
D8041 -LI 2-08-O-N BR		12	M18 x 1.5	G 1/2 A	10.0	14.0	14.0	27.0	41.5	27.0	22.0
D8041-L15-06-0-NBR		15	M22x 1.5	G 3/8 A	12.0	9.0	12.0	23.0	38.0	24.0	27.0
D8041 -LI 5-08-O-N BR		15	M22x 1.5	G 1/2 A	12.0	14.0	14.0	28.0	43.0	27.0	27.0
D8041-L1808-0-NBR		18	M26x 1.5	G 1/2 A	15.0	14.0	14.0	28.5	44.5	27.0	32.0
D8041-L22-08-0-NDV		22	M30 x 2	G 1/2 A	19.0	14.0	14.0	27.5	43.5	32.0	36.0
D8041-L22-12-O-NBR		22	M30 x 2	G 3/4 A	19.0	18.0	16.0	32.5	48.5	32.0	36.0
D8041-L22-16-O-NDV		22	M30 x 2	G 1 A	19.0	23.0	18.0	35.5	51.5	41.0	36.0
D8041-L28-16-O-NBR		28	M36 x 2	G 1 A	24.0	23.0	18.0	35.5	52.0	41.0	41.0
D8041-L35-20-O-N BR		35	M45 x 2	G 1-1/4 A	30.0	30.0	20.0	37.5	59.0	50.0	50.0
D8041-L42-24-O-NBR		42	M52 x 2	G 1-1/2 A	36.0	36.0	22.0	41.0	63.5	55.0	60.0
D8041-S06-04-0-N BR		6	M14x 1.5	G 1/4 A	4.0	5.0	12.0	25.0	39.5	19.0	17.0
D8041-S08 04-0-NBR		8	M16x 1.5	G 1/4 A	5.0	5.0	12.0	27.0	41.5	19.0	19.0
D8041 -SI 0-04-0-N BR		10	M18x 1.5	G 1/4 A	7.0	5.0	12.0	24.5	40.5	19.0	22.0
D8041 -S10-06-0- N BR		10	M18x 1.5	G 3/8 A	7.0	8.0	12.0	27.0	43.0	22.0	22.0
D8041 -SI 2-04-O-N BR		12	M20 x 1.5	G 1/4 A	8.0	5.0	12.0	26.5	42.5	22.0	24.0
D8041 -SI 2-06-O-NBR		12	M20x 1.5	G 3/8 A	8.0	8.0	12.0	29.0	45.0	22.0	24.0
D8041 -SI 2-08-O-N BR		12	M20 x 1.5	G 1/2 A	8.0	12.0	14.0	31.5	47.5	27.0	24.0
D8041-S14-08-O-NBR		14	M22x 1.5	G 1/2 A	10.0	12.0	14.0	32.5	50.5	27.0	27.0
D8041-S16-08-0-NBR		16	M24x 1.5	G 1/2 A	12.0	12.0	14.0	32.5	50.5	27.0	30.0
D8041-S16-12-O-NBR		16	M24x 1.5	G 3/4 A	12.0	16.0	16.0	36.5	54.5	32.0	30.0
D8041-S20-08-0-N BR		20	M30 x 2	G 1/2 A	16.0	12.0	14.0	31.5	53.0	32.0	36.0
D8041-S20-12-0-NBR		20	M30 x 2	G 3/4 A	16.0	16.0	16.0	36.5	58.0	32.0	36.0
D8041-S25-12-0-N BR		25	M36 x 2	G 3/4 A	20.0	16.0	16.0	36.0	60.0	41.0	46.0
D8041-S25-16-0-N BR		25	M36 x 2	G 1 A	20.0	20.0	18.0	41.0	65.0	41.0	46.0
D8041-S30-20-0-N BR		30	M42 x 2	G 1-1/4 A	25.0	25.0	20.0	43.5	70.0	50.0	50.0
D8041-S38-24-O-NBR		38	M52 x 2	G 1-1/2 A	32.0	32.0	22.0	48.0	78.5	55.0	60.0

Straight Male Stud Coupling BSPT Body Only
D8043 Series

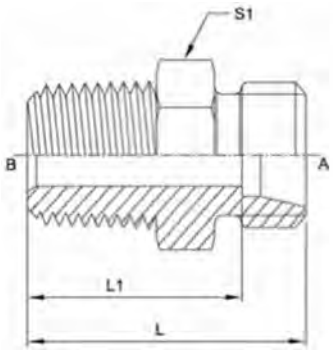

PAST NO. SIZE	A TUBE 0.0	A THD	B BSPT	A DRILL	8 DRILL	LI LGTH	I LGTH	SI HEX
D8043-E04-02	4	M8 x 1	R 1/8	3	3	19.8	20	11
D8043-E06-02	6	MIOxl	R 1/8	4.5	4.5	18.3	20	11
D8043-E08-02	8	M12 x 1	R 1/8	6	6	18.7	22	12
D8043-E08-04	8	M12 x 1	R 1/4	6	6	24.6	30.1	14
D8043-L06-02	6	M12 x 1.5	R 1/8	4	4	17.2	24.2	12
D8043-L08-02	8	M14 x 1.5	R 1/8	6	6	18.2	25.2	14
D8043-L08-04	8	M14 x 1.5	R 1/4	6	6	24.1	31.1	14
D8043-L08-06	8	M14 x 1.5	R 3/8	6	6	24.1	31.1	19
D8043-L10-04	10	M16 x 1.5	R 1/4	8	7	23.7	30.7	17
D8043-L10-06	10	M16 x 1.5	R 3/8	8	8	25.1	32.1	19
D8043-L10-08	10	M16 x 1.5	R 1/2	8	8	31.4	38.4	22
D8043-L12-04	12	M18 x 1.5	R 1/4	10	7	24.7	31.7	19
D8043-L12-06	12	M18 x 1.5	R 3/8	10	10	25.1	32.1	19
D8043-L12-08	12	M18 x 1.5	R 1/2	10	10	31.4	38.4	22
D8043-L15-08	15	M22 x 1.5	R 1/2	12	12	30.5	37.5	24
D8043-L18-08	18	M26 x 1.5	R 1/2	15	13.5	31	38.5	27
D8043-L22-12	22	M30 x 2	R 3/4	19	18	33	40.5	32
D8043-L28-16	28	M36 x 2	R 1	24	23.8	38.9	46.4	41
D8043-S06-04	6	M14 x 1.5	R 1/4	4	4	26.1	33.1	14
D8043-S08-04	8	M16 x 1.5	R 1/4	5	5	27.7	34.7	17
D8043-S20-08	20	M30 x 2	R 1/2	16	16	37	47.5	32
D8043-S25-16	25	M36 x 2	R 1	20	20	44.4	56.4	41

Metric Bite Type Fittings

Straight Male Stud Coupling BSPT
D8043-NBR Series

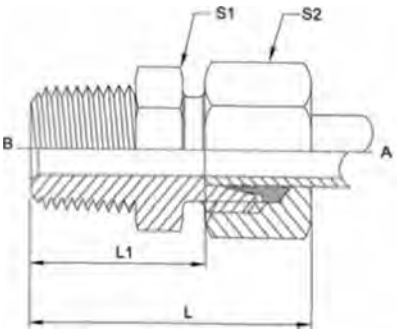

PART NO. SIZE	A TUBE 0.0	A THD	B BSPT	A DRILL	B DRILL	11 LGTH	L LGTH	SI HEX	S2 HEX
D8043-E04-02-N BR	4	M8 x 1	R 1/8	3.0	4.8	19.8	29.3	11.0	10.0
D8043-E06-02-NBR	6	MIOxI	R 1/8	4.5	4.8	18.3	29.8	11.0	12.0
D8043-E08-02-N BR	8	M12 x 1	R 1/8	6.0	6.0	18.7	30.2	12.0	14.0
D8043-E08-04-N BR	8	M12 x 1	R 1/4	6.0	6.0	24.6	36.1	14.0	14.0
D8043-L06-02-NBR	6	M12 x 1.5	R 1/8	4.0	4.0	17.2	31.7	12.0	14.0
D8043-L08-02-NBR	8	M14 x 1.5	R 1/8	6.0	6.0	18.2	32.7	14.0	17.0
D8043-L08-04-NBR	8	M14x 1.5	R 1/4	6.0	7.0	24.1	38.6	14.0	17.0
D8043-L08-06-NBR	8	M14 x 1.5	R 3/8	6.0	10.3	24.1	38.6	19.0	17.0
D8043-L10-04-NBR	10	M16 x 1.5	R 1/4	8.0	7.0	23.7	38.2	17.0	19.0
D8043-L10-06-NBR	10	M16 x 1.5	R 3/8	8.0	10.3	25.1	39.6	19.0	19.0
D8043-L10-08-NBR	10	M16 x 1.5	R 1/2	8.0	13.5	31.4	45.9	22.0	19.0
D8043-L12-04-NBR	12	M18 x 1.5	R 1/4	10.0	7.0	24.7	39.2	19.0	22.0
D8043-L12-06-N BR	12	M18 x 1.5	R 3/8	10.0	10.3	25.1	39.6	19.0	22.0
D8043-L12-08-NBR	12	M18 x 1.5	R 1/2	10.0	13.5	31.4	45.9	22.0	22.0
D8043-L15-08-N BR	15	M22 x 1.5	R 1/2	12.0	13.5	30.5	45.5	24.0	27.0
D8043-L18-08-N BR	18	M26 x 1.5	R 1/2	15.0	13.5	31.0	47.0	27.0	32.0
D8043-L22-12-N BR	22	M30 x 2	R 3/4	19.0	18.0	33.0	49.0	32.0	36.0
D8043-L28-16-N BR	28	M36 x 2	R 1	24.0	23.8	38.9	55.4	41.0	41.0
D8043-S06-04-N BR	6	M14 x 1.5	R 1/4	4.0	7.0	26.1	40.6	14.0	17.0
D8043-S08-04-N BR	8	M16 x 1.5	R 1/4	5.0	7.0	27.7	42.2	17.0	19.0
D8043-S20-08-N BR	20	M30 x 2	R 1/2	16.0	13.5	37.0	58.5	32.0	36.0
D8043-S25-16-NBR	25	M36 x 2	R 1	20.0	23.8	44.4	68.4	41.0	46.0

Female Stud Coupling BSPP Body Only

D8044 Series

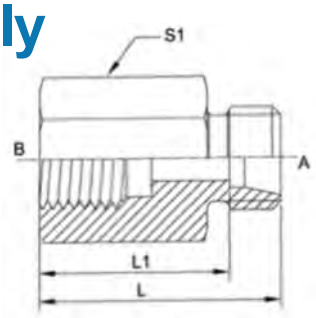

F-025

PART NO. SIZE	A TUBE 0.0	A THD	B BSPP	A DRILL	11 L6TH	L LGTH	SI HEX
D8044-L06-06	6	M12 x 1.5	G 3/8	4.0	24.0	31.0	22.0
D8044-L08-04	8	M14 x 1.5	G 1/4	6.0	22.0	29.0	19.0
D8044-L08-06	8	M14 x 1.5	G 3/8	6.0	24.0	31.0	22.0
D8044-L10-04	10	M16 x 1.5	G 1/4	8.0	23.0	30.0	19.0
D8044-L10-06	10	M16 x 1.5	G 3/8	8.0	25.0	32.0	22.0
D8044-L12-08	12	M18 x 1.5	G 1/2	10.0	27.0	34.0	27.0
D8044-S12-06	12	M20 x 1.5	G 3/8	8.0	25.5	33.0	22.0
D8044-S14-08	14	M22 x 1.5	G 1/2	10.0	28.5	37.0	27.0
D8044-S25-16	25	M36 x 2	G 1	20.0	37.0	49.0	41.0
D8044-S30-20	30	M42 x 2	G 1-1/4	25.0	42.5	56.0	50.0

Female Stud Coupling BSPP

D8044-NBR Series

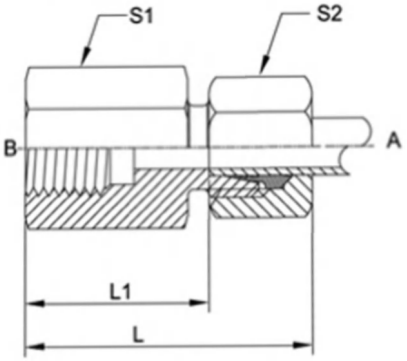

PART NO. SIZE	A TUBE 0.0	A TNO	B THO	A DRILL	LI LGTH	L LGTH	SI HEX	S2 HEX
D8044- L06-06- N B R	6	M12 x 1.5	G 3/8	4.0	24.0	38.5	22.0	14.0
D8044-L08-04-NBR	8	M14 x 1.5	G1/4	6.0	22.0	36.5	19.0	17.0
D8044-L08-06-NBR	8	M14 x 1.5	G 3/8	6.0	24.0	38.5	22.0	17.0
D8044-L10-04-NBR	10	M16 x 1.5	G 1/4	8.0	23.0	37.5	19.0	19.0
D8044-L10-06-NBR	10	M16 x 1.5	G 3/8	8.0	25.0	39.5	22.0	19.0
D8044-L12-08-NBR	12	M18 x 1.5	G 1/2	10.0	27.0	41.5	27.0	22.0
D8044-S12-06-NBR	12	M20x 1.5	G 3/8	8.0	25.5	41.5	22.0	24.0
D8044-S14-08-N BR	14	M22 x 1.5	G 1/2	10.0	28.5	46.5	27.0	27.0
D8044-S25-16-NBR	25	M36 x 2	G 1	20.0	37.0	61.0	41.0	46.0
D8044-S30-20-NBR	30	M42 x 2	G 1-1/4	25.0	42.5	69.0	50.0	50.0

Metric Bite Type Fittings

Straight Stud Standpipe Adapter BSPP Sealing Bite
D8045 Series

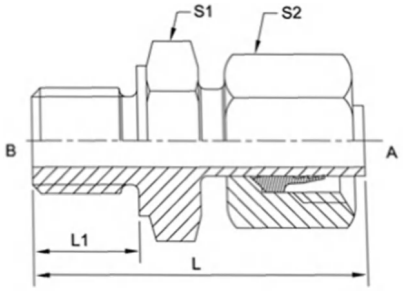

PART NO. SIZE	D1 TUBE 0.0	01 THO	02 THO	01 DRILL	02 DRILL	11 LOTH	L LETII	SI HEX	S2 HEX
D8045-L12-06	12	M18x 1.5	G 3/8 A	7.5	9.0	12.0	42.5	22.0	22.0
D8045-L18-08	18	M26 x 1.5	G 1/2 A	14.0	14.0	14.0	44.5	27.0	32.0
D8045-L22-12	22	M30 x 2	G 3/4 A	18.0	18.0	16.0	48.5	32.0	36.0
D8045-S25-16	25	M36 x 2	G 1 A	18.0	20.0	18.0	66.0	41.0	46.0

Straight Stud Standpipe Adapter BSPP Elastomer Seal
D8046 Series

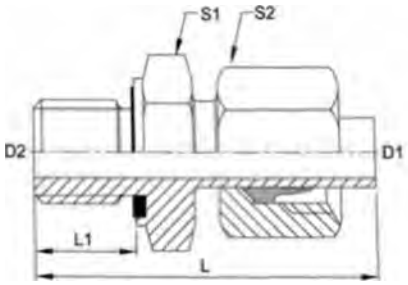

PART NO. SIZE	01 TUBE 0.0	01 THO	02 THO	01 DRILL	02 DRILL	LI LOTH	L LGTH	SI HEX	S2 HEX
D8046-L08-04-0	8	M14x 1.5	G 1/4 A	4.5	6.0	12.0	38.5	19.0	17.0
D8046-L10-04-0	10	M16 x 1.5	G 1/4 A	7.0	6.0	12.0	39.5	19.0	19.0
D8046-L12-06-0	12	MI 8 x 1.5	G 3/8 A	7.5	9.0	12.0	42.5	22.0	22.0
D8046-L15-08-0	15	M22 x 1.5	G 1/2 A	11.0	14.0	14.0	46.0	27.0	27.0
D8046-L22-12-O	22	M30 x 2	G 3/4 A	18.0	18.0	16.0	48.5	32.0	36.0
D8046-L28-16-O	28	M36 x 2	G 1 A	23.0	23.0	18.0	53.0	41.0	41.0
D8046-L35-20-O	35	M45 x 2	G 1-1/4 A	29.5	30.0	20.0	62.5	50.0	50.0
D8046-L42-24-O	42	M52 x 2	G 1-1/2 A	35.5	36.0	22.0	68.5	55.0	60.0
D8046-S06-04-0	6	M14 x 1.5	G 1/4 A	3.5	5.0	12.0	39.0	19.0	17.0
D8046-S08-04-0	8	M16 x 1.5	G 1/4 A	4.5	5.0	12.0	39.5	19.0	19.0
D8046-S10-04-0	10	M18 x 1.5	G 1/4 A	7.0	5.0	12.0	41.5	19.0	22.0
D8046-S10-06-0	10	M18 x 1.5	G 3/8 A	7.0	8.0	12.0	44.0	22.0	22.0
D8046-S12-06-0	12	M20 x 1.5	G 3/8 A	6.5	8.0	12.0	44.0	22.0	24.0
D8046-S16-08-0	16	M24 x 1.5	G 1/2 A	11.5	12.0	14.0	51.0	27.0	30.0
D8046-S20-12-0	20	M30 x 2	G 3/4 A	15.5	16.0	16.0	59.0	32.0	36.0
D8046-S25-12-O	25	M36 x 2	G 3/4 A	18.0	16.0	16.0	61.0	41.0	46.0
D8046-S30-20-0	30	M42 x 2	G 1-1/4 A	23.0	25.0	20.0	71.0	50.0	50.0

Straight Male Stud Coupling NPTF Body Only
D8050 Series

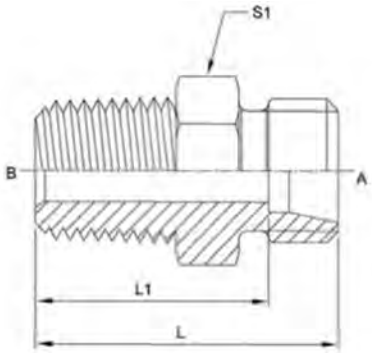

F-027

PART NO. SIZE	A TUBE 0.0	A THD	0 NPTF	A DRILL	8 DRILL	LI LGTH	I LOTH	SI HEX
D8050-E04-02	4	M8 x 1	1/8-27	3.0	4.8	19.8	23.8	11.0
D8050-E06-02	6	MIOxl	1/8-27	4.5	4.8	18.3	23.8	11.0
D8050-E08-02	8	M12 x 1	1/8-27	6.0	4.8	18.7	24.2	12.0
D8050-L06-02	6	M12 x 1.5	1/8-27	4.0	4.8	17.2	24.2	12.0
D8050 L06-04	6	M12 x 1.5	1/4-18	4.0	7.0	24.1	31.1	14.0
D8050 L08-02	8	M14x 1.5	1/8-27	6.0	4.8	18.2	25.2	14.0
D8050-L08-04	8	M14 x 1.5	1/4-18	6.0	7.0	24.1	31.1	14.0
D8050-L08-06	8	M14 x 1.5	3/8-18	6.0	10.3	24.1	31.1	19.0
D8050-L10-02	10	M16 x 1.5	1/8-27	8.0	4.8	19.2	26.2	17.0
D8050-L10-04	10	M16 x 1.5	1/4-18	8.0	7.0	23.7	30.7	17.0
D8050-L10-06	10	M16 x 1.5	3/8-18	8.0	10.3	25.1	32.1	19.0
D8050-L12-04	12	M18 x 1.5	1/4-18	10.0	7.0	24.7	31.7	19.0
D8050-L12-06	12	M18 x 1.5	3/8-18	10.0	10.3	25.1	32.1	19.0
D8050-L12-08	12	M18 x 1.5	1/2-14	10.0	13.5	31.4	38.4	22.0
D8050-L15-08	15	M22 x 1.5	1/2-14	12.0	13.5	30.5	37.5	24.0
D8050-L18-08	18	M26 x 1.5	1/2-14	15.0	13.5	31.0	38.5	27.0
D8050-L18-12	18	M26 x 1.5	3/4-14	15.0	18.0	33.7	41.2	27.0
D8050-L22-12	22	M30 x 2	3/4-14	19.0	18.0	33.0	40.5	32.0
D8050-L28-16	28	M36 x 2	1-11-1/2	24.0	23.8	38.9	46.4	41.0
D8050-L35-20	35	M45 x 2	1-1/4-11-1/2	30.0	31.7	39.6	50.1	46.0
D8050-L42-24	42	M52 x 2	1-1/2-11-1/2	36.0	38.0	41.9	52.9	55.0
D8050-S06-04	6	M14 x 1.5	1/4-18	4.0	7.0	26.1	33.1	14.0
D8050-S08-04	8	M16 x 1.5	1/4-18	5.0	7.0	27.7	34.7	17.0
D8050-S10-04	10	M18 x 1.5	1/4-18	7.0	7.0	27.2	34.7	19.0
D8050-S10-06	10	M18 x 1.5	3/8-18	7.0	10.3	25.6	33.1	19.0
D8050-S12-06	12	M20 x 1.5	3/8-18	8.0	10.3	29.2	36.7	22.0
D8050-S12-08	12	M20 x 1.5	1/2-14	8.0	13.5	31.9	39.4	22.0
D8050-S14-06	14	M22 x 1.5	3/8-18	10.0	10.3	30.2	38.7	24.0
D8050-S14-08	14	M22 x 1.5	1/2-14	10.0	13.5	35.0	43.5	24.0
D8050-S16-06	16	M24 x 1.5	3/8-18	12.0	10.3	30.2	38.7	27.0
D8050-S16-08	16	M24 x 1.5	1/2-14	12.0	13.5	35.0	43.5	27.0
D8050-S16-12	16	M24 x 1.5	3/4-14	12.0	18.0	34.7	43.2	27.0
D8050-S20-12	20	M30 x 2	3/4-14	16.0	18.0	37.0	47.5	32.0
D8050-S25-16	25	M36 x 2	1-11-1/2	20.0	23.8	44.4	56.4	41.0
D8050-S30-20	30	M42 x 2	1-1/4-11-1/2	25.0	31.7	45.6	59.1	46.0
D8050-S38-24	38	M52 x 2	1-1/2-11-1/2	32.0	38.0	48.9	64.9	55.0

Metric Bite Type Fittings

Straight Male Stud Coupling NPTF
D8050-NBR Series

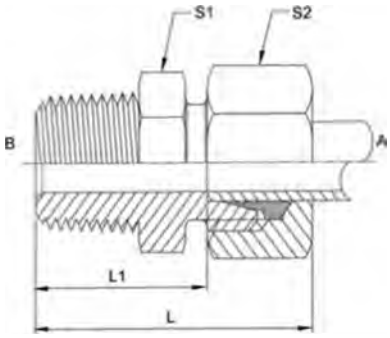

PART NO.SIZE	A TUBE 0.D	A THD	B NPTF	A DRILL	B DRIU	11 LGTH	L LGTH	SI HEX	S2 HEX
D8050-E04-02-N BR	4	M8 x 1	1/8-27	3.0	4.8	19.8	29.3	11.0	10.0
D8050-E06-02-NBR	6	M10 x 1	1/8-27	4.5	4.8	18.3	29.8	11.0	12.0
D8050-E08-02-N BR	8	M12 x 1	1/8-27	6.0	4.8	18.7	30.2	12.0	14.0
D8050-L06-02-N BR	6	M12x 1.5	1/8-27	4.0	4.8	17.2	31.7	12.0	14.0
D8050-L06-04-N BR	6	M12x 1.5	1/4-18	4.0	7.0	24.1	38.6	14.0	14.0
D8050-L08-02-N BR	8	M14x 1.5	1/8-27	6.0	4.8	18.2	32.7	14.0	17.0
D8050-L08-04-N BR	8	M14x 1.5	1/4-18	6.0	7.0	24.1	38.6	14.0	17.0
D8050-L08-06-N BR	8	M14x 1.5	3/8-18	6.0	10.3	24.1	38.6	19.0	17.0
D8050-L10-02-N BR	10	M16x 1.5	1/8-27	8.0	4.8	19.2	33.7	17.0	19.0
D8050-L10-04-N BR	10	M16x 1.5	1/4-18	8.0	7.0	23.7	38.2	17.0	19.0
D8050-L10-06-N BR	10	M16 x 1.5	3/8-18	8.0	10.3	25.1	39.6	19.0	19.0
D8050-L12-04-NBR	12	M18x 1.5	1/4-18	10.0	7.0	24.7	39.2	19.0	22.0
D8050-L12-06-N BR	12	M18x 1.5	3/8-18	10.0	10.3	25.1	39.6	19.0	22.0
D8050-L12-08-N BR	12	M18x 1.5	1/2-14	10.0	13.5	31.4	45.9	22.0	22.0
D8050-L15-08-N BR	15	M22x 1.5	1/2-14	12.0	13.5	30.5	45.5	24.0	27.0
D8050-L18-08-N BR	18	M26x 1.5	1/2-14	15.0	13.5	31.0	47.0	27.0	32.0
D8050-L18-12-NBR	18	M26 x 1.5	3/4-14	15.0	18.0	33.7	49.7	27.0	32.0
D8050-L22-12-NBR	22	M30 x 2	3/4-14	19.0	18.0	33.0	49.0	32.0	36.0
D8050-L28-16-N BR	28	M36 x 2	1-11-1/2	24.0	23.8	38.9	55.4	41.0	41.0
D8050-L35-20-N BR	35	M45 x 2	1-1/4-11-1/2	30.0	31.7	39.6	61.1	46.0	50.0
D8050-L42-24-N BR	42	M52 x 2	1-1/2-11-1/2	36.0	38.0	41.9	64.4	55.0	60.0
D8050-S06-04-N BR	6	M14 x 1.5	1/4-18	4.0	7.0	26.1	40.6	14.0	17.0
D8050-S08-04-NBR	8	M16 x 1.5	1/4-18	5.0	7.0	27.7	42.2	17.0	19.0
D8050-S10-04-NBR	10	M18 x 1.5	1/4-18	7.0	7.0	27.2	43.2	19.0	22.0
D8050-S10-06- N BR	10	M18 x 1.5	3/8-18	7.0	10.3	25.6	41.6	19.0	22.0
D8050-S12-06- N BR	12	M20 x 1.5	3/8-18	8.0	10.3	29.2	45.2	22.0	24.0
D8050-S12-08-NBR	12	M20 x 1.5	1/2-14	8.0	13.5	31.9	47.9	22.0	24.0
D8050-S14-06- N BR	14	M22 x 1.5	3/8-18	10.0	10.3	30.2	48.2	24.0	27.0
D8050-S14-08-NBR	14	M22 x 1.5	1/2-14	10.0	13.5	35.0	53.0	24.0	27.0
D8050-S16-06-NBR	16	M24 x 1.5	3/8-18	12.0	10.3	30.2	48.2	27.0	30.0
D8050-S16-08-NBR	16	M24 x 1.5	1/2-14	12.0	13.5	35.0	53.0	27.0	30.0
D8050-S16-12-NBR	16	M24 x 1.5	3/4-14	12.0	18.0	34.7	52.7	27.0	30.0
D8050-S20-12-NBR	20	M30 x 2	3/4-14	16.0	18.0	37.0	58.5	32.0	36.0
D8050-S25-16-N BR	25	M36 x 2	1-11-1/2	20.0	23.8	44.4	68.4	41.0	46.0
D8050-S30-20-NBR	30	M42 x 2	1-1/4-11-1/2	25.0	31.7	45.6	72.1	46.0	50.0
D8050-S38-24-NBR	38	M52 x 2	1-1/2-11-1/2	32.0	38.0	48.9	79.4	55.0	60.0

Straight Male Stud Coupling ORB Body Only
D8051 Series

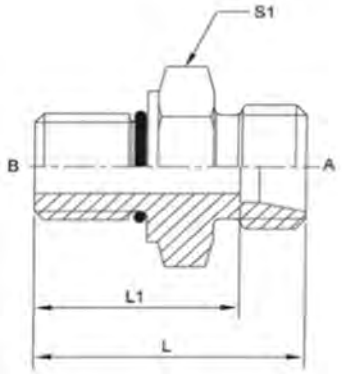

F-029

PART NO. SIZE	A TUBE 0.0	A THD	B ORB	A DRILL	B DRILL	LI LGTH	L LGTH	SI HEX
D8051 - L06-04-0- N B R	6	MI2 x 1.5	7/16-20	4.0	4.4	20.0	27.0	14.0
D8051-L08-04-0-NBR	8	M14 x 1.5	7/16-20	6.0	4.4	20.0	27.0	14.0
D8051-L08-05-0-NBR	8	M14 x 1.5	1/2-20	6.0	6.0	20.0	27.0	17.0
D8051-L10-04-0-NBR	10	M16 x 1.5	7/16-20	8.0	4.4	18.1	25.1	17.0
D8051-L10-06-0-NBR	10	M16x 1.5	9/16-18	8.0	7.5	22.9	29.9	17.0
D8051-L12-06-0-NBR	12	M18x 1.5	9/16-18	10.0	7.5	20.0	27.0	19.0
D8051 -LI 2-06-O-N DV	12	M18x 1.5	9/16-18	10.0	7.5	20.0	27.0	19.0
D8051-L12-08-0-NBR	12	M18 x 1.5	3/4-16	10.0	9.9	24.8	31.8	22.0
D8051 -LI 5-08-O-N BR	15	M22 x 1.5	3/4-16	12.0	9.9	22.1	29.1	24.0
D8051 -LI 5-10-O-N BR	15	M22x 1.5	7/8-14	12.0	12.3	28.7	35.7	27.0
D8051 -LI 8-08-O-N BR	18	M26x 1.5	3/4-16	15.0	9.9	22.6	30.1	27.0
D8051 -LI 8-10-O-N BR	18	M26x 1.5	7/8-14	15.0	12.3	28.2	35.7	27.0
D8051-L22-10-O-N BR	22	M30 x 2	7/8-14	19.0	12.3	26.2	33.7	32.0
D8051-L22-12-O-N BR	22	M30 x 2	1-1/16-12	19.0	15.5	34.6	42.1	32.0
D8051-L22-16-O-N BR	22	M30 x 2	1-5/16-12	19.0	21.4	35.4	42.9	41.0
D8051-L28-12-O-N BR	28	M36 x 2	1-1/16-12	24.0	15.5	29.6	37.1	41.0
D8051-L28-16-O-NBR	28	M36 x 2	1-5/16-12	24.0	21.4	35.4	42.9	41.0
D8051-L35-20-0-NBR	35	M45 x 2	1-5/8-12	30.0	27.4	36.2	46.7	50.0
D8051-S06-04-0-N BR	6	M14 x 1.5	7/16-20	4.0	4.4	24.0	31.0	17.0
D8051-S08-04-0-N BR	8	M16x 1.5	7/16-20	5.0	4.4	24.0	31.0	17.0
D8051-S08-05-0-NBR	8	M16x 1.5	1/2-20	5.0	6.0	24.7	31.7	19.0
D8051 -SI 0-06-O-NBR	10	M18x 1.5	9/16-18	7.0	6.5	25.1	32.6	19.0
D8051-S12-06-0-NBR	12	M20x 1.5	9/16-18	8.0	6.5	26.5	34.0	22.0
D8051-S12-08-0-NBR	12	M20x 1.5	3/4-16	8.0	9.5	28.3	35.8	22.0
D8051 -SI 4-08-O-N BR	14	M22x 1.5	3/4-16	10.0	9.5	29.5	38.0	24.0
D8051 -SI 6-08-O-N BR	16	M24x 1.5	3/4-16	12.0	9.5	29.5	38.0	27.0
D8051 -SI 6-10-O-N BR	16	M24x 1.5	7/8-14	12.0	12.3	33.2	41.7	27.0
D8051-SI 6-12-O-N BR	16	M24 x 1.5	1-1/16-12	12.0	15.5	37.2	45.7	32.0
D8051-S20-08-0-N BR	20	M30 x 2	3/4-16	16.0	9.5	31.5	42.0	32.0
D8051-S20-10-O-N BR	20	M30 x 2	7/8-14	16.0	12.3	33.5	44.0	32.0
D8051-S20-12-O-N BR	20	M30 x 2	1-1/16-12	16.0	15.5	37.2	47.7	32.0
D8051-S25-16-O-N BR	25	M36 x 2	1-5/16-12	20.0	20.6	38.7	50.7	41.0

Metric Bite Type Fittings

Straight Male Stud Coupling ORB
D8051-NBR Series

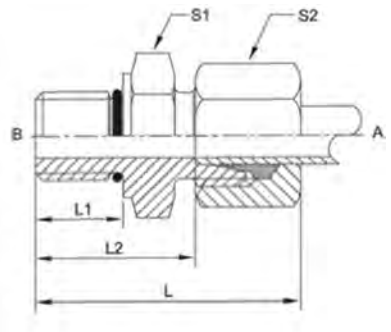

PART NO. SIZE	A TUBE 0.0	A TDD	B ORB	A DRILL	B ORILL	LI LOTH	12 LOTH	L LOTH	SI HEX	S2 HEX
D8051-L06-04-0-N BR	6	M12 x 1.5	7/16-20	4.0	4.4	9.1	20.0	34.5	14.0	14.0
D8051-L08-04-0-N BR	8	M14 x 1.5	7/16-20	6.0	4.4	9.1	20.0	34.5	14.0	17.0
D8051-L08-05-0-N BR	8	M14 x 1.5	1/2-20	6.0	6.0	9.1	20.0	34.5	17.0	17.0
D8051-L10-04-0-NBR	10	M16x 1.5	7/16-20	8.0	4.4	9.1	18.1	32.6	17.0	19.0
D8051 -LI 0-06-0-N BR	10	M16 x 1.5	9/16-18	8.0	7.5	10.0	22.9	37.4	17.0	19.0
D8051 -LI 2-06-O-N BR	12	M18 x 1.5	9/16-18	10.0	7.5	10.0	20.0	34.5	19.0	22.0
D8051 -LI 2-06-O-N DV	12	M18x 1.5	9/16-18	10.0	7.5	10.0	20.0	34.5	19.0	22.0
D8051-L12-08-0-NBR	12	M18 x 1.5	3/4-16	10.0	9.9	11.1	24.8	39.3	22.0	22.0
D8051 -LI 5-08-O-N BR	15	M22 x 1.5	3/4-16	12.0	9.9	11.1	22.1	37.1	24.0	27.0
D8051-L15-10-0-NBR	15	M22 x 1.5	7/8-14	12.0	12.3	12.7	28.7	43.7	27.0	27.0
D8051 -LI 8-08-O-N BR	18	M26 x 1.5	3/4-16	15.0	9.9	11.1	22.6	38.6	27.0	32.0
D8051-L18-10-0-NBR	18	M26 x 1.5	7/8-14	15.0	12.3	12.7	28.2	44.2	27.0	32.0
D8051-L22-10-O-N BR	22	M30 x 2	7/8-14	19.0	12.3	12.7	26.2	42.2	32.0	36.0
D8051-L22-12-O-NBR	22	M30 x 2	1-1/16-12	19.0	15.5	15.1	34.6	50.6	32.0	36.0
D8051-L22-16-O-N BR	22	M30 x 2	1-5/16-12	19.0	21.4	15.1	35.4	51.4	41.0	36.0
D8051-L28-12-O-NBR	28	M36 x 2	1-1/16-12	24.0	15.5	15.1	29.6	46.1	41.0	41.0
D8051-L28-16-O-N BR	28	M36 x 2	1-5/16-12	24.0	21.4	15.1	35.4	51.9	41.0	41.0
D8051-L35-20-O-N BR	35	M45 x 2	1-5/8-12	30.0	27.4	15.1	36.2	57.7	50.0	50.0
D8051-S06-04-0-N BR	6	M14 x 1.5	7/16-20	4.0	4.4	11.0	24.0	38.5	17.0	17.0
D8051-S08-04-0-N BR	8	M16 x 1.5	7/16-20	5.0	4.4	11.0	24.0	38.5	17.0	19.0
D8051-S08-05-0-NBR	8	M16 x 1.5	1/2-20	5.0	6.0	11.0	24.7	39.2	19.0	19.0
D8051-S10-06-0-NBR	10	M18 x 1.5	9/16-18	7.0	6.5	12.0	25.1	41.1	19.0	22.0
D8051-S12-06-0-NBR	12	M20 x 1.5	9/16-18	8.0	6.5	12.0	26.5	42.5	22.0	24.0
D8051-S12-08-0-NBR	12	M20 x 1.5	3/4-16	8.0	9.5	14.0	28.3	44.3	22.0	24.0
D8051 -SI 4-08-O-N BR	14	M22 x 1.5	3/4-16	10.0	9.5	14.0	29.5	47.5	24.0	27.0
D8051 -S16-08-0- N BR	16	M24 x 1.5	3/4-16	12.0	9.5	14.0	29.5	47.5	27.0	30.0
D8051 -SI 6-10-O-N BR	16	M24 x 1.5	7/8-14	12.0	12.3	16.0	33.2	51.2	27.0	30.0
D8051-SI 6-12-O-NBR	16	M24 x 1.5	1-1/16-12	12.0	15.5	18.5	37.2	55.2	32.0	30.0
D8051-S20-08-0- N BR	20	M30 x 2	3/4-16	16.0	9.5	14.0	31.5	53.0	32.0	36.0
D8051-S20-10-0-NBR	20	M30 x 2	7/8-14	16.0	12.3	16.0	33.5	55.0	32.0	36.0
D8051-S20-12-O-NBR	20	M30 x 2	1-1/16-12	16.0	15.5	18.5	37.2	58.7	32.0	36.0
D8051-S25-16-O-N BR	25	M36 x 2	1-5/16-12	20.0	20.6	18.5	38.7	62.7	41.0	46.0

BRENNAN Industries

Straight Coupling Body Only
D8060 Series

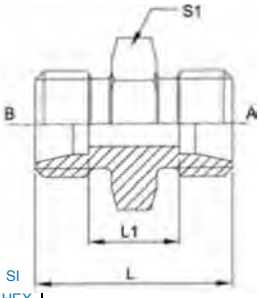

PART NO. SIZE	A TUBE 0.0	BTUBE 0.0	A THD	B THD	A DRILL	B BRILL	LI LGTH	L LGTH	SI HEX
D8060-E04-04	4	4	M8 x 1	M8 x 1	3.0	3.0	12.0	20.0	9.0
D8060-E05-05	5	5	MIOxI	MIOxI	3.5	3.5	9.0	20.0	11.0
D8060-E06-04	6	4	MIOxI	M8 x 1	4.5	3.0	10.5	20.0	11.0
D8060-E06-06	6	6	MIOx 1	M10 x 1	4.5	4.5	9.0	20.0	11.0
D8060-E08-08	8	8	M12 x 1	M12 x 1	6.0	6.0	12.0	23.0	12.0
D8060-L06-06	6	6	M12 x 1.5	M12 x 1.5	4.0	4.0	10.0	24.0	12.0
D8060-L08-06	8	6	M14 x 1.5	M12 x 1.5	6.0	4.0	11.0	25.0	14.0
D8060-L08-08	8	8	M14 x 1.5	M14 x 1.5	6.0	6.0	11.0	25.0	14.0
D8060-L10-06	10	6	M16x 1.5	M12 x 1.5	8.0	4.0	12.0	26.0	17.0
D8060-L10-08	10	8	M16 x 1.5	M14 x 1.5	8.0	6.0	12.0	26.0	17.0
D8060-L10-10	10	10	M16x 1.5	M16 x 1.5	8.0	8.0	13.0	27.0	17.0
D8060-L12-06	12	6	M18 x 1.5	M12 x 1.5	10.0	4.0	13.0	27.0	19.0
D8060-L12-08	12	8	M18 x 1.5	M14X1.5	10.0	6.0	13.0	27.0	19.0
D8060-L12-10	12	10	M18 x 1.5	M16 x 1.5	10.0	8.0	14.0	28.0	19.0
D8060-L12-12	12	12	M18 x 1.5	M18 x 1.5	10.0	10.0	14.0	28.0	19.0
D8060-L12-22	12	22	M18 x 1.5	M30 x 2	10.0	19.0	17.5	32.0	32.0
D8060-L15-08	15	8	M22 x 1.5	M14 x 1.5	12.0	6.0	14.0	28.0	24.0
D8060-L15-10	15	10	M22x 1.5	M16 x 1.5	12.0	8.0	15.0	29.0	24.0
D8060-L15-12	15	12	M22 x 1.5	M18x 1.5	12.0	10.0	15.0	29.0	24.0
D8060-L15-15	15	15	M22 x 1.5	M22 x 1.5	12.0	12.0	16.0	30.0	24.0
D8060-L18-10	18	10	M26 x 1.5	M16x 1.5	15.0	8.0	15.5	30.0	27.0
D8060-L18-12	18	12	M26 x 1.5	M18 x 1.5	15.0	10.0	15.5	30.0	27.0
D8060-L18-15	18	15	M26 x 1.5	M22 x 1.5	15.0	12.0	16.5	31.0	27.0
D8060 L18-18	18	18	M26 x 1.5	M26 x 1.5	15.0	15.0	16.0	31.0	27.0
D8060-L22-12	22	12	M30 x 2	M18 x 1.5	19.0	10.0	17.5	32.0	32.0
D8060-L22-15	22	15	M30 x 2	M22 x 1.5	19.0	12.0	18.5	33.0	32.0
D8060-L22-18	22	18	M30 x 2	M26 x 1.5	19.0	15.0	18.0	33.0	32.0
D8060-L22-22	22	22	M30 x 2	M30 x 2	19.0	19.0	20.0	35.0	32.0
D8060-L28-15	28	15	M36 x 2	M22 x 1.5	24.0	12.0	19.5	34.0	41.0
D8060-L28-18	28	18	M36 x 2	M26 x 1.5	24.0	15.0	19.0	34.0	41.0
D8060-L28-22	28	22	M36 x 2	M30 x 2	24.0	19.0	21.0	36.0	41.0
D8060 L28-28	28	28	M36 x 2	M36 x 2	24.0	24.0	21.0	36.0	41.0
D8060-L35-22	35	22	M45 x 2	M30 x 2	30.0	19.0	21.0	39.0	46.0
D8060-L35-28	35	28	M45 x 2	M36 x 2	30.0	24.0	21.0	39.0	46.0
D8060-L35-35	35	35	M45 x 2	M45 x 2	30.0	30.0	20.0	41.0	46.0
D8060-L42-42	42	42	M52 x 2	M52 x 2	36.0	36.0	21.0	43.0	55.0
D8060-S06-06	6	6	M14 x 1.5	M14x 1.5	4.0	4.0	16.0	30.0	14.0
D8060-S08-06	8	6	M16 x 1.5	M14 x 1.5	5.0	4.0	18.0	32.0	17.0
D8060-S08-08	8	8	M16x 1.5	M16 x 1.5	5.0	5.0	18.0	32.0	17.0
D8060-S10-06	10	6	M18 x 1.5	M14 x 1.5	7.0	4.0	17.5	32.0	19.0
D8060-S10-08	10	8	M18 x 1.5	M16 x 1.5	7.0	5.0	17.5	32.0	19.0
D8060-S10-10	10	10	M18 x 1.5	M18 x 1.5	7.0	7.0	17.0	32.0	19.0
D8060-S12-06	12	6	M20 x 1.5	M14 x 1.5	8.0	4.0	19.5	34.0	22.0
D8060-S12-08	12	8	M20 x 1.5	M16 x 1.5	8.0	5.0	19.5	34.0	22.0
D8060-S12-10	12	10	M20 x 1.5	M18 x 1.5	8.0	7.0	19.0	34.0	22.0
D8060-S12-12	12	12	M20 x 1.5	M20x 1.5	8.0	8.0	19.0	34.0	22.0
D8060-S14-12	14	12	M22 x 1.5	M20 x 1.5	10.0	8.0	20.0	36.0	24.0
D8060-S14-14	14	14	M22 x 1.5	M22 x 1.5	10.0	10.0	21.0	38.0	24.0
D8060-S16-10	16	10	M24 x 1.5	M18 x 1.5	12.0	7.0	20.0	36.0	27.0
D8060-S16-12	16	12	M24 x 1.5	M20 x 1.5	12.0	8.0	20.0	36.0	27.0
D8060-S16-14	16	14	M24 x 1.5	M22 x 1.5	12.0	10.0	21.0	38.0	27.0
D8060-S16-16	16	16	M24 x 1.5	M24 x 1.5	12.0	12.0	21.0	38.0	27.0
D8060-S20-10	20	10	M30 x 2	M18 x 1.5	16.0	7.0	22.0	40.0	32.0
D8060-S20-12	20	12	M30 x 2	M20 x 1.5	16.0	8.0	22.0	40.0	32.0
D8060-S20-14	20	14	M30 x 2	M22 x 1.5	16.0	10.0	23.0	42.0	32.0
D8060-S20-16	20	16	M30 x 2	M24 x 1.5	16.0	12.0	23.0	42.0	32.0
D8060-S20-20	20	20	M30 x 2	M30 x 2	16.0	16.0	23.0	44.0	32.0
D8060-S25-16	25	16	M36 x 2	M24 x 1.5	20.0	12.0	25.5	46.0	41.0
D8060-S25-20	25	20	M36 x 2	M30 x 2	20.0	16.0	25.5	48.0	41.0
D8060-S25-25	25	25	M36 x 2	M36 x 2	20.0	20.0	26.0	50.0	41.0
D8060-S30-20	30	20	M42 x 2	M30x2	25.0	16.0	26.0	50.0	46.0
D8060-S30-25	30	25	M42 x 2	M36 x 2	25.0	20.0	26.5	52.0	46.0
D8060-S30-30	30	30	M42 X 2	M42 x 2	25.0	25.0	27.0	54.0	46.0
D8060-S38-30	38	30	M52 X 2	M42 x 2	32.0	25.0	29.5	59.0	55.0
D8060-S38-38	38	38	M52 x 2	M52 x 2	32.0	32.0	29.0	61.0	55.0

Metric Bite Type Fittings

Straight Coupling
D8060-NBR Series

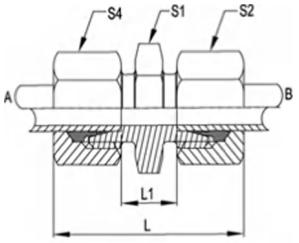

PART NO. SIZE	A TUBE O.D	BTUBE O.D	A THD	B THD	A DRILL	B DRILL	11 LGTH	I LGTH	SI HEX	S4 HEX	S2 HEX
D8060-E04-04-NBR	4	4	M8 x 1	M8 x 1	3.0	3.0	12.0	31.0	9.0	10.0	10.0
D8060-E05-05-NBR	5	5	M10 x 1	MIOxI	3.5	3.5	9.0	32.0	11.0	12.0	12.0
D8060-E0604- N B R	6	4	MIOxI	M8 x 1	4.5	3.0	10.5	31.5	11.0	12.0	10.0
D8060- E06-06- N B R	6	6	MIOxI	MIOxI	4.5	4.5	9.0	32.0	11.0	12.0	12.0
D8060-E08-08-NBR	8	8	M12 x 1	M12 x 1	6.0	6.0	12.0	35.0	12.0	14.0	14.0
D8060-L06-06-NBR	6	6	M12x 1.5	M12 x 1.5	4.0	4.0	10.0	39.0	12.0	14.0	14.0
D8060-L08-06-NBR	8	6	M14 x 1.5	M12 x 1.5	6.0	4.0	11.0	40.0	14.0	17.0	14.0
D8060-L08-08-NBR	8	8	M14 x 1.5	M14 x 1.5	6.0	6.0	11.0	40.0	14.0	17.0	17.0
D8060-L10-06-NBR	10	6	M16 x 1.5	M12 x 1.5	8.0	4.0	12.0	41.0	17.0	19.0	14.0
D8060-L10-08-NBR	10	8	M16 x 1.5	M14 x 1.5	8.0	6.0	12.0	41.0	17.0	19.0	17,0
D8060-L10-10-NBR	10	10	M16 x 1.5	M16 x 1.5	8.0	8.0	13.0	42.0	17.0	19.0	19.0
D8060-L12-06-NBR	12	6	M18 x 1.5	M12 x 1.5	10.0	4.0	13.0	42.0	19.0	22.0	14.0
D8060-L12-08-NBR	12	8	M18 x 1.5	M14 x 1.5	10.0	6.0	13.0	42.0	19.0	22.0	17.0
D8060-L12-10-NBR	12	10	M18 x 1.5	M16 x 1.5	10.0	8.0	14.0	43.0	19.0	22.0	19.0
D8060-L12-12-N BR	12	12	M18 x 1.5	M18 x 1.5	10.0	10.0	14.0	43.0	19.0	22.0	22.0
D8060-L12-22-NBR	12	22	M18 x 1.5	M30 x 2	10.0	19.0	17.5	48.0	32.0	22.0	36.0
D8060-L15-08-NBR	15	8	M22 x 1.5	M14x 1.5	12.0	6.0	14.0	43.5	24.0	27.0	17.0
D8060-L15-10-NBR	15	10	M22 x 1.5	M16 x 1.5	12.0	8.0	15.0	44.5	24.0	27.0	19.0
D8060-L15-12-NBR	15	12	M22 x 1.5	M18 x 1.5	12.0	10.0	15.0	44.5	24.0	27.0	22.0
D8060-L15-15-NBR	15	15	M22 x 1.5	M22 x 1.5	12.0	12.0	16.0	46.0	24.0	27.0	27.0
D8060-L18-10-NBR	18	10	M26 x 1.5	MI 6 x 1.5	15.0	8.0	15.5	46.0	27.0	32.0	19.0
D8060-L18-12-N BR	18	12	M26 x 1.5	M18 x 1.5	15.0	10.0	15.5	46.0	27.0	32.0	22.0
D8060-L18-15-NBR	18	15	M26 x 1.5	M22 x 1.5	15.0	12.0	16.5	47.5	27.0	32.0	27.0
D8060-L18-18-NBR	18	18	M26 x 1.5	M26 x 1.5	15.0	15.0	16.0	48.0	27.0	32.0	32.0
D8060-L22-12-N BR	22	12	M30x2	M18 x 1.5	19.0	10.0	17.5	48.0	32.0	36.0	22.0
D8060-L22-15-NBR	22	15	M30 x 2	M22 x 1.5	19.0	12.0	18.5	49.5	32.0	36.0	27.0
D8060-L22-18-NBR	22	18	M30x 2	M26 x 1.5	19.0	15.0	18.0	50.0	32.0	36.0	32.0
D8060-L22-22-NBR	22	22	M30 x 2	M30 x 2	19.0	19.0	20.0	52.0	32.0	36.0	36.0
D8060-L28-15-NBR	28	15	M36 x 2	M22 x 1.5	24.0	12.0	19.5	51.0	41.0	41.0	27.0
D8060-L28-18-NBR	28	18	M36 x 2	M26 x 1.5	24.0	15.0	19.0	51.5	41.0	41.0	32.0
D8060-L28-22-NBR	28	22	M36 x 2	M30 x 2	24.0	19.0	21.0	53.5	41.0	41.0	36.0
D8060-L28-28-NBR	28	28	M36 x 2	M36 x 2	24.0	24.0	21.0	54.0	41.0	41.0	41.0
D8060-L35-22-NBR	35	22	M45 x 2	M30 x 2	30.0	19.0	21.0	58.5	46.0	50.0	36.0
D8060- L35-28- N B R	35	28	M45 x 2	M36 x 2	30.0	24.0	21.0	59.0	46.0	50.0	41.0
D8060-L35-35-NBR	35	35	M45x 2	M45x2	30.0	30.0	20.0	63.0	46.0	50.0	50.0
D8060-L42-42-NBR	42	42	M52 x 2	M52 x 2	36.0	36.0	21.0	66.0	55.0	60.0	60.0
D8060-S0606-NBR	6	6	M14 x 1.5	M14 x 1.5	4.0	4.0	16.0	45.0	14.0	17.0	17.0
D8060-S0806-NBR	8	6	M16x 1.5	M14 x 1.5	5.0	4.0	18.0	47.0	17.0	19.0	17.0
D8060-S08-08-NBR	8	8	M16x 1.5	M16 x 1.5	5.0	5.0	18.0	47.0	17.0	19.0	19.0
D8060-S10-06-NBR	10	6	M18 x 1.5	M14 x 1.5	7.0	4.0	17.5	48.0	19.0	22.0	17.0
D8060-S10-08-NBR	10	8	M18 x 1.5	M16 x 1.5	7.0	5.0	17.5	48.0	19.0	22.0	19.0
D8060-S10-10-NBR	10	10	M18 x 1.5	M18x 1.5	7.0	7.0	17.0	49.0	19.0	22.0	22.0
D8060-S12-06-N BR	12	6	M20 x 1.5	M14 x 1.5	8.0	4.0	19.5	50.0	22.0	24.0	17.0
D8060-S12-08- N B R	12	8	M20 x 1.5	M16 x 1.5	8.0	5.0	19.5	50.0	22.0	24.0	19.0
D8060-S12-10-NBR	12	10	M20 x 1.5	M18x 1.5	8.0	7.0	19.0	51.0	22.0	24.0	22.0
D8060-S12-12-NBR	12	12	M20 x 1.5	M20 x 1.5	8.0	8.0	19.0	51.0	22.0	24.0	24.0
D8060-S14-12-NBR	14	12	M22 x 1.5	M20x 1.5	10.0	8.0	20.0	54.0	24.0	27.0	24.0
D8060-S14-14-NBR	14	14	M22x 1.5	M22 x 1.5	10.0	10.0	21.0	57.0	24.0	27.0	27.0
D8060-S16-10-NBR	16	10	M24 x 1.5	M18 x 1.5	12.0	7.0	20.0	54.0	27.0	30.0	22.0
D8060-S16-12-NBR	16	12	M24 x 1.5	M20 x 1.5	12.0	8.0	20.0	54.0	27.0	30.0	24.0
D8060-S16-14- N B R	16	14	M24 x 1.5	M22 x 1.5	12.0	10.0	21.0	57.0	27.0	30.0	27.0
D8060-S16-16-NBR	16	16	M24 x 1.5	M24 x 1.5	12.0	12.0	21.0	57.0	27.0	30.0	30.0
D8060-S20-10-NBR	20	10	M30x2	M18 x 1.5	16.0	7.0	22.0	59.5	32.0	36.0	22.0
D8060-S20-12-N BR	20	12	M30 x 2	M20 x 1.5	16.0	8.0	22.0	59.5	32.0	36.0	24.0
D8060-S20-14-NBR	20	14	M30 x 2	M22 x 1.5	16.0	10.0	23.0	62.5	32.0	36.0	27.0
D8060-S20-16-NBR	20	16	M30 x 2	M24 x 1.5	16.0	12.0	23.0	62.5	32.0	36.0	30.0
D8060-S20-20- N B R	20	20	M30x2	M30 x 2	16.0	16.0	23.0	66.0	32.0	36.0	36.0
D8060-S25-16-NBR	25	16	M36 x 2	M24 x 1.5	20.0	12.0	25.5	67.5	41.0	46.0	30.0
D8060-S25-20- N B R	25	20	M36x2	M30 X 2	20.0	16.0	25.5	71.0	41.0	46.0	36.0
D8060-S25-25-NBR	25	25	M36x2	M36 x 2	20.0	20.0	26.0	74.0	41.0	46.0	46.0
D8060-S30-20-NBR	30	20	M42 x 2	M30x2	25.0	16.0	26.0	74.0	46.0	50.0	36.0
D8060-S30-25-NBR	30	25	M42 x 2	M36 x 2	25.0	20.0	26.5	77.0	46.0	50.0	46.0
D8060-S30-30-N BR	30	30	M42 x 2	M42 x 2	25.0	25.0	27.0	80.0	46.0	50.0	50.0
D8060-S38-30-NBR	38	30	M52 x 2	M42 x 2	32.0	25.0	29.5	86.5	55.0	60.0	50.0
D8060-S38-38-NBR	38	38	M52 x 2	M52x2	32.0	32.0	29.0	90.0	55.0	60.0	60.0

Straight Bulkhead Coupling Body Only
D8061 Series

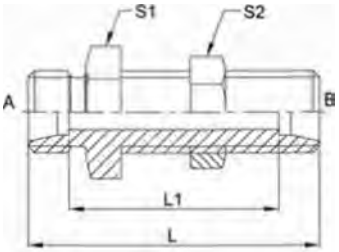

PART NO. SIZE	A TUBE 0.0	BTUBE 0.0	A THD	B THD	A DRILL	B DRILL	LI LBTH	L LOTH	SI HEX	S2 HEX
D8061-LN-L06-06	6	6	M12 x 1.5	M12 x 1.5	4.0	4.0	34.0	48.0	17.0	17.0
D8061-LN-L08-08	8	8	M14 x 1.5	M14 x 1.5	6.0	6.0	35.0	49.0	19.0	19.0
D8061-LN-L10-10	10	10	M16 x 1.5	M16 x 1.5	8.0	8.0	38.0	52.0	22.0	22.0
D8061-LN-L12-12	12	12	M18 x 1.5	M18 x 1.5	10.0	10.0	39.0	53.0	24.0	24.0
D8061-LN-L15-15	15	15	M22 x 1.5	M22 x 1.5	12.0	12.0	43.0	57.0	27.0	27.0
D8061-LN-L18-18	18	18	M26 x 1.5	M26 x 1.5	15.0	15.0	46.0	61.0	32.0	32.0
D8061-LN-L22-22	22	22	M30 x 2	M30 x 2	19.0	19.0	51.0	66.0	36.0	36.0
D8061-LN-L28-28	28	28	M36 x 2	M36 x 2	24.0	24.0	54.0	69.0	41.0	41.0
D8061-LN-L35-35	35	35	M45 x 2	M45 x 2	30.0	30.0	55.0	76.0	50.0	50.0
D8061-LN-L42-42	42	42	M52 x 2	M52 x 2	36.0	36.0	55.0	77.0	60.0	60.0
D8061-LN-S06-06	6	6	M14x 1.5	M14 x 1.5	4.0	4.0	41.0	55.0	19.0	19.0
D8061-LN-S08-08	8	8	M16 x 1.5	M16 x 1.5	5.0	5.0	42.0	56.0	22.0	22.0
D8061-LN-S10-10	10	10	M18 x 1.5	M18 x 1.5	7.0	7.0	44.0	59.0	24.0	24.0
D8061-LN-S12-12	12	12	M20 x 1.5	M20 x 1.5	8.0	8.0	45.0	60.0	27.0	27.0
D8061-LN-S14-14	14	14	M22 x 1.5	M22 x 1.5	10.0	10.0	48.0	65.0	32.0	32.0
D8061-LN-S16-16	16	16	M24 x 1.5	M24 x 1.5	12.0	12.0	48.0	65.0	32.0	32.0
D8061-LN-S20-20	20	20	M30 x 2	M30 x 2	16.0	16.0	51.0	72.0	41.0	41.0
D8061-LN-S25-25	25	25	M36 x 2	M36 x 2	20.0	20.0	55.0	79.0	46.0	46.0
D8061-LN-S30-30	30	30	M42 x 2	M42 x 2	25.0	25.0	59.0	86.0	50.0	50.0
D8061-LN-S38-38	38	38	M52 x 2	M52 x 2	32.0	32.0	59.0	91.0	65.0	65.0

Straight Bulkhead Coupling
D8061-NBR Series

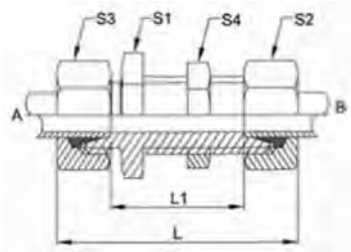

PART NO. SIZE	A TUBE 0.0	BTUBE 0.0	A THD	B THD	A DRILL	B DRILL	LI LGTH	I LGTH	SI HEX	S3 HEX	S4 HEX	S2 HEX
D8061-LN-L06-06-NBR	6	6	M12 x 1.5	M12 x 1.5	4.0	4.0	34.0	63.0	17.0	14.0	17.0	14.0
D8061-LN-L08-08-NBR	8	8	M14 x 1.5	M14x 1.5	6.0	6.0	35.0	64.0	19.0	17.0	19.0	17.0
D8061-LN-L10-10-NBR	10	10	M16x 1.5	M16 x 1.5	8.0	8.0	38.0	67.0	22.0	19.0	22.0	19.0
D8061-LN-L12-12-NBR	12	12	M18 x 1.5	M18x 1.5	10.0	10.0	39.0	68.0	24.0	22.0	24.0	22.0
D8061-LN-L15-15-NBR	15	15	M22 x 1.5	M22x 1.5	12.0	12.0	43.0	73.0	27.0	27.0	27.0	27.0
D8061-LN-L18-18-NBR	18	18	M26 x 1.5	M26x 1.5	15.0	15.0	46.0	78.0	32.0	32.0	32.0	32.0
D8061-LN-L22-22-NBR	22	22	M30 x 2	M30 x 2	19.0	19.0	51.0	83.0	36.0	36.0	36.0	36.0
D8061-LN-L28-28-NBR	28	28	M36 x 2	M36 x 2	24.0	24.0	54.0	87.0	41.0	41.0	41.0	41.0
D8061-LN-L35-35-NBR	35	35	M45x2	M45 x 2	30.0	30.0	55.0	98.0	50.0	50.0	50.0	50.0
D8061-LN-L42-42-NBR	42	42	M52 x 2	M52 x 2	36.0	36.0	55.0	100.0	60.0	60.0	60.0	60.0
D8061-LN-S06-06-N BR	6	6	M14 x 1.5	M14x 1.5	4.0	4.0	41.0	70.0	19.0	17.0	19.0	17.0
D8061-LN-S08-08-N BR	8	8	M16 x 1.5	M16x 1.5	5.0	5.0	42.0	71.0	22.0	19.0	22.0	19.0
D8061-LN-S10-10-NBR	10	10	M18 x 1.5	M18 x 1.5	7.0	7.0	44.0	76.0	24.0	22.0	24.0	22.0
D8061-LN-S12-12-N BR	12	12	M20 x 1.5	M20x 1.5	8.0	8.0	45.0	77.0	27.0	24.0	27.0	24.0
D8061-LN-S14-14-NBR	14	14	M22 x 1.5	M22x 1.5	10.0	10.0	48.0	84.0	32.0	27.0	32.0	27.0
D8061-LN-S16-16-N BR	16	16	M24 x 1.5	M24x 1.5	12.0	12.0	48.0	84.0	32.0	30.0	32.0	30.0
D8061-LN-S20-20-N BR	20	20	M30 x 2	M30 x 2	16.0	16.0	51.0	94.0	41.0	36.0	41.0	36.0
D8061-LN-S25-25-NBR	25	25	M36 x 2	M36 x 2	20.0	20.0	55.0	103.0	46.0	46.0	46.0	46.0
D8061-LN-S30-30-N BR	30	30	M42 x 2	M42 x 2	25.0	25.0	59.0	112.0	50.0	50.0	50.0	50.0
D8061-LN-S38-38-N BR	38	38	M52 x 2	M52 x 2	32.0	32.0	59.0	120.0	65.0	60.0	65.0	60.0

Metric Bite Type Fittings

Reducing Adjustable Coupling
D8062 Series

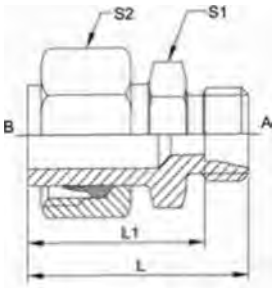

PART NO. SIZE	A TUBE 0.D	B TUBE O.D	A THD	B TND	A DRILL	B DRILL	11 LGTH	L LOTH	SI HEX	S2 HEX
D8062-L08-06	8	6	M14 x 1.5	M12 x 1.5	4.5	4.0	27.5	34.5	14.0	17.0
D8062-L10-06	10	6	M16 x 1.5	M12 x 1.5	7.0	4.0	28.5	35.5	17.0	19.0
D8062-L10-08	10	8	M16 x 1.5	M14 x 1.5	7.0	6.0	28.5	35.5	17.0	19.0
D8062-L12-06	12	6	M18 x 1.5	M12 x 1.5	7.5	4.0	31.0	38.0	19.0	22.0
D8062-L12-08	12	8	M18 x 1.5	M14 x 1.5	7.5	6.0	31.0	38.0	19.0	22.0
D8062-L12-10	12	10	M18 x 1.5	M16 x 1.5	7.5	8.0	32.0	39.0	19.0	22.0
D8062-L15-06	15	6	M22 x 1.5	M12 x 1.5	11.0	4.0	32.0	39.0	24.0	27.0
D8062-L15-08	15	8	M22 x 1.5	M14 x 1.5	11.0	6.0	32.0	39.0	24.0	27.0
D8062-L15-10	15	10	M22 x 1.5	M16 x 1.5	11.0	8.0	33.0	40.0	24.0	27.0
D8062-L15-12	15	12	M22 x 1.5	M18 x 1.5	11.0	10.0	33.0	40.0	24.0	27.0
D8062-L18-08	18	8	M26 x 1.5	M14x 1.5	14.0	6.0	31.5	38.5	27.0	32.0
D8062-L18-10	18	10	M26 x 1.5	M16 x 1.5	14.0	8.0	32.5	39.5	27.0	32.0
D8062-L18-12	18	12	M26 x 1.5	M18 x 1.5	14.0	10.0	32.5	39.5	27.0	32.0
D8062-L18-15	18	15	M26 x 1.5	M22 x 1.5	14.0	12.0	33.5	40.5	27.0	32.0
D8062-L22-08	22	8	M30 x 2	M14 x 1.5	18.0	6.0	32.5	39.5	32.0	36.0
D8062-L22-10	22	10	M30 x 2	M16 x 1.5	18.0	8.0	33.5	40.5	32.0	36.0
D8062-L22-12	22	12	M30 x 2	M18 x 1.5	18.0	10.0	33.5	40.5	32.0	36.0
D8062-L22-15	22	15	M30 x 2	M22x 1.5	18.0	12.0	34.5	41.5	32.0	36.0
D8062-L22-18	22	18	M30 x 2	M26 x 1.5	18.0	15.0	34.0	41.5	32.0	36.0
D8062-L28-15	28	15	M36 x 2	M22x 1.5	23.0	12.0	37.0	44.0	41.0	41.0
D8062-L28-18	28	18	M36 x 2	M26 x 1.5	23.0	15.0	36.5	44.0	41.0	41.0
D8062-L28-22	28	22	M36 x 2	M30 x 2	23.0	19.0	38.5	46.0	41.0	41.0
D8062-L35-18	35	18	M45 x 2	M26 x 1.5	29.5	15.0	44.0	51.5	46.0	50.0
D8062-L35-22	35	22	M45 x 2	M30 x 2	29.5	19.0	46.0	53.5	46.0	50.0
D8062-L35-28	35	28	M45 x 2	M36 x 2	29.5	24.0	46.0	53.5	46.0	50.0
D8062-L42-22	42	22	M52 x 2	M30 x 2	35.5	19.0	50.0	57.5	55.0	60.0
D8062-L42-28	42	28	M52 x 2	M36 x 2	35.5	24.0	50.0	57.5	55.0	60.0
D8062-L42-35	42	35	M52 x 2	M45 x 2	35.5	30.0	49.0	59.5	55.0	60.0
D8062-S08-06	8	6	M16 x 1.5	M14 x 1.5	4.5	4.0	32.5	39.5	17.0	19.0
D8062-S10-08	10	8	M18 x 1.5	M16 x 1.5	7.0	5.0	34.5	41.5	19.0	22.0
D8062-S12-08	12	8	M20 x 1.5	M16 x 1.5	6.5	5.0	36.5	43.5	22.0	24.0
D8062-S12-10	12	10	M20 x 1.5	M18 x 1.5	6.5	7.0	36.0	43.5	22.0	24.0
D8062-S14-08	14	8	M22 x 1.5	M16 x 1.5	9.5	5.0	29.0	36.0	24.0	27.0
D8062-S14-10	14	10	M22 x 1.5	M18x 1.5	9.5	7.0	28.5	36.0	24.0	27.0
D8062-S14-12	14	12	M22 x 1.5	M20 x 1.5	9.5	8.0	28.5	36.0	24.0	27.0
D8062-S16-06	16	6	M24 x 1.5	M14x 1.5	11.5	4.0	39.0	46.0	27.0	30.0
D8062-S16-08	16	8	M24 x 1.5	M16 x 1.5	11.5	5.0	39.0	46.0	27.0	30.0
D8062-S16-10	16	10	M24 x 1.5	M18x 1.5	11.5	7.0	38.5	46.0	27.0	30.0
D8062-S16-12	16	12	M24 x 1.5	M20 x 1.5	11.5	8.0	38.5	46.0	27.0	30.0
D8062-S16-14	16	14	M24 x 1.5	M22 x 1.5	11.5	10.0	39.5	48.0	27.0	30.0
D8062-S16-20	16	20	M24 x 1.5	M30 x 2	11.5	16.0	41.5	52.0	32.0	30.0
D8062-S20-08	20	8	M30 x 2	M16x 1.5	15.5	5.0	45.0	52.0	32.0	36.0
D8062-S20-12	20	12	M30 x 2	M20 x 1.5	15.5	8.0	44.5	52.0	32.0	36.0
D8062-S20-14	20	14	M30 x 2	M22x 1.5	15.5	10.0	45.5	54.0	32.0	36.0
D8062-S20-16	20	16	M30 x 2	M24 x 1.5	15.5	12.0	45.5	54.0	32.0	36.0
D8062-S25-10	25	10	M36 x 2	M18 x 1.5	18.0	7.0	49.5	57.0	41.0	46.0
D8062-S25-12	25	12	M36 x 2	M20 x 1.5	18.0	8.0	49.5	57.0	41.0	46.0
D8062-S25-14	25	14	M36 x 2	M22 x 1.5	18.0	10.0	50.5	59.0	41.0	46.0
D8062-S25-16	25	16	M36 x 2	M24 x 1.5	18.0	12.0	50.5	59.0	41.0	46.0
D8062-S25-20	25	20	M36 x 2	M30 x 2	18.0	16.0	50.5	61.0	41.0	46.0
D8062-S30-12	30	12	M42 x 2	M20 x 1.5	23.0	8.0	52.5	60.0	46.0	50.0
D8062-S30-16	30	16	M42 x 2	M24 x 1.5	23.0	12.0	53.5	62.0	46.0	50.0
D8062-S30-20	30	20	M42 x 2	M30 x 2	23.0	16.0	53.5	64.0	46.0	50.0
D8062-S30-25	30	25	M42 x 2	M36 x 2	23.0	20.0	54.0	66.0	46.0	50.0
D8062-S38-16	38	16	M52 x 2	M24 x 1.5	29.0	12.0	62.5	71.0	55.0	60.0
D8062-S38-20	38	20	M52 x 2	M30 x 2	29.0	16.0	62.5	73.0	55.0	60.0
D8062-S38-25	38	25	M52 x 2	M36 x 2	29.0	20.0	63.0	75.0	55.0	60.0
D8062-S38-30	38	30	M52 x 2	M42 x 2	29.0	25.0	63.5	77.0	55.0	60.0

Reducing Adjustable Coupling
D8062-NBR Series

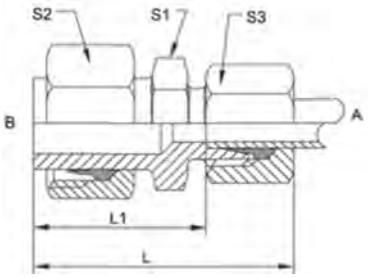

PART NO. SIZE	A TUBE 0.0	B TUBE 0.0	A TWO	B mo	A DRILL	B 0RILL	LI LETH	L LOTH	SI HEX	S2 HEX	S3 HEX
D8062-L08-06-N BR	8	6	M14 x 1.5	M12 x 1.5	4.5	4.0	27.5	42.0	14.0	17.0	14.0
D8062-L10-06-N BR	10	6	M16 x 1.5	M12 x 1.5	7.0	4.0	28.5	43.0	17.0	19.0	14.0
D8062-L10-08-N BR	10	8	M16 x 1.5	M14 x 1.5	7.0	6.0	28.5	43.0	17.0	19.0	17.0
D8062-L12-06-N BR	12	6	M18 x 1.5	M12x 1.5	7.5	4.0	31.0	45.5	19.0	22.0	14.0
D8062-L12-08-N BR	12	8	M18 x 1.5	M14 x 1.5	7.5	6.0	31.0	45.5	19.0	22.0	17.0
D8062-L12-10-NBR	12	10	M18 x 1.5	M16x 1.5	7.5	8.0	32.0	46.5	19.0	22.0	19.0
D8062-L15-06-NBR	15	6	M22 x 1.5	M12 x 1.5	11.0	4.0	32.0	46.5	24.0	27.0	14.0
D8062-L15-08-NBR	15	8	M22 x 1.5	M14 x 1.5	11.0	6.0	32.0	46.5	24.0	27.0	17.0
D8062-L15-10-NBR	15	10	M22 x 1.5	M16 x 1.5	11.0	8.0	33.0	47.5	24.0	27.0	19.0
D8062-L15-12-NBR	15	12	M22 x 1.5	M18x 1.5	11.0	10.0	33.0	47.5	24.0	27.0	22.0
D8062-L18-08-N BR	18	8	M26 x 1.5	M14 x 1.5	14.0	6.0	31.5	46.0	27.0	32.0	17.0
D8062-L18-10-NBR	18	10	M26 x 1.5	M16x 1.5	14.0	8.0	32.5	47.0	27.0	32.0	19.0
D8062-L18-12-NBR	18	12	M26 x 1.5	M18 x 1.5	14.0	10.0	32.5	47.0	27.0	32.0	22.0
D8062-L18-15-NBR	18	15	M26 x 1.5	M22x 1.5	14.0	12.0	33.5	48.5	27.0	32.0	27.0
D8062-L22-08-NBR	22	8	M30 x 2	M14 x 1.5	18.0	6.0	32.5	47.0	32.0	36.0	17.0
D8062-L22-10-NBR	22	10	M30 x 2	M16 x 1.5	18.0	8.0	33.5	48.0	32.0	36.0	19.0
D8062-L22-12-NBR	22	12	M30 x 2	M18 x 1.5	18.0	10.0	33.5	48.0	32.0	36.0	22.0
D8062-L22-15-NBR	22	15	M30 x 2	M22 x 1.5	18.0	12.0	34.5	49.5	32.0	36.0	27.0
D8062-L22-18-N BR	22	18	M30 x 2	M26 x 1.5	18.0	15.0	34.0	50.0	32.0	36.0	32.0
D8062-L28-15-NBR	28	15	M36 x 2	M22 x 1.5	23.0	12.0	37.0	52.0	41.0	41.0	27.0
D8062-L28-18-N BR	28	18	M36 x 2	M26 x 1.5	23.0	15.0	36.5	52.5	41.0	41.0	32.0
D8062-L28-22-N BR	28	22	M36 x 2	M30 x 2	23.0	19.0	38.5	54.5	41.0	41.0	36.0
D8062-L35-18-N B R	35	18	M45 x 2	M26 x 1.5	29.5	15.0	44.0	60.0	46.0	50.0	32.0
D8062-L35-22-NBR	35	22	M45 x 2	M30 x 2	29.5	19.0	46.0	62.0	46.0	50.0	36.0
D8062-L35-28-N B R	35	28	M45 x 2	M36 x 2	29.5	24.0	46.0	62.5	46.0	50.0	41.0
D8062-L42-22-N BR	42	22	M52 x 2	M30 x 2	35.5	19.0	50.0	66.0	55.0	60.0	36.0
D8062-L42-28-N BR	42	28	M52 x 2	M36 x 2	35.5	24.0	50.0	66.5	55.0	60.0	41.0
D8062-L42-35-NBR	42	35	M52 x 2	M45 x 2	35.5	30.0	49.0	70.5	55.0	60.0	50.0
D8062-S08-06-NBR	8	6	M16 x 1.5	M14 x 1.5	4.5	4.0	32.5	47.0	17.0	19.0	17.0
D8062-S10-08-N BR	10	8	M18 x 1.5	M16 x 1.5	7.0	5.0	34.5	49.0	19.0	22.0	19.0
D8062-S12-08-N BR	12	8	M20 x 1.5	M16 x 1.5	6.5	5.0	36.5	51.0	22.0	24.0	19.0
D8062-S12-10-NBR	12	10	M20 x 1.5	M18 x 1.5	6.5	7.0	36.0	52.0	22.0	24.0	22.0
D8062-S14-08-N BR	14	8	M22 x 1.5	M16 x 1.5	9.5	5.0	29.0	43.5	24.0	27.0	19.0
D8062-S14-10-NBR	14	10	M22 x 1.5	M18 x 1.5	9.5	7.0	28.5	44.5	24.0	27.0	22.0
D8062-S14-12-NBR	14	12	M22 x 1.5	M20 x 1.5	9.5	8.0	28.5	44.5	24.0	27.0	24.0
D8062-S16-06-NBR	16	6	M24 x 1.5	M14 x 1.5	11.5	4.0	39.0	53.5	27.0	30.0	17.0
D8062-S16-08-NBR	16	8	M24 x 1.5	M16 x 1.5	11.5	5.0	39.0	53.5	27.0	30.0	19.0
D8062-S16-10-NBR	16	10	M24 x 1.5	M18 x 1.5	11.5	7.0	38.5	54.5	27.0	30.0	22.0
D8062-S16-12-NBR	16	12	M24 x 1.5	M20 x 1.5	11.5	8.0	38.5	54.5	27.0	30.0	24.0
D8062-S16-14-N BR	16	14	M24 x 1.5	M22 x 1.5	11.5	10.0	39.5	57.5	27.0	30.0	27.0
D8062-S16-20-N BR	16	20	M24 x 1.5	M30 x 2	11.5	16.0	41.5	63.0	32.0	30.0	36.0
D8062-S20-08-N BR	20	8	M30 x 2	M16 x 1.5	15.5	5.0	45.0	59.5	32.0	36.0	19.0
D8062-S20-12-N BR	20	12	M30 x 2	M20 x 1.5	15.5	8.0	44.5	60.5	32.0	36.0	24.0
D8062-S20-14-N BR	20	14	M30 x 2	M22 x 1.5	15.5	10.0	45.5	63.5	32.0	36.0	27.0
D8062-S20-16-N BR	20	16	M30 x 2	M24 x 1.5	15.5	12.0	45.5	63.5	32.0	36.0	30.0
D8062-S25-10-N BR	25	10	M36 x 2	M18 x 1.5	18.0	7.0	49.5	65.5	41.0	46.0	22.0
D8062-S25-12-N BR	25	12	M36 x 2	M20 x 1.5	18.0	8.0	49.5	65.5	41.0	46.0	24.0
D8062-S25-14-N BR	25	14	M36 x 2	M22 x 1.5	18.0	10.0	50.5	68.5	41.0	46.0	27.0
D8062-S25-16-N BR	25	16	M36 x 2	M24 x 1.5	18.0	12.0	50.5	68.5	41.0	46.0	30.0
D8062-S25-20-N BR	25	20	M36 x 2	M30 x 2	18.0	16.0	50.5	72.0	41.0	46.0	36.0
D8062-S30-12-N BR	30	12	M42 x 2	M20 x 1.5	23.0	8.0	52.5	68.5	46.0	50.0	24.0
D8062-S30-16-N BR	30	16	M42 x 2	M24x 1.5	23.0	12.0	53.5	71.5	46.0	50.0	30.0
D8062-S30-20-NBR	30	20	M42 x 2	M30 x 2	23.0	16.0	53.5	75.0	46.0	50.0	36.0
D8062-S30-25-NBR	30	25	M42 x 2	M36 x 2	23.0	20.0	54.0	78.0	46.0	50.0	46.0
D8062-S38-16-N BR	38	16	M52 x 2	M24 x 1.5	29.0	12.0	62.5	80.5	55.0	60.0	30.0
D8062-S38-20-NBR	38	20	M52 x 2	M30 x 2	29.0	16.0	62.5	84.0	55.0	60.0	36.0
D8062-S38-25-NBR	38	25	M52 x 2	M36 x 2	29.0	20.0	63.0	87.0	55.0	60.0	46.0
D8062-S38-30- N BR	38	30	M52 x 2	M42 x 2	29.0	25.0	63.5	90.0	55.0	60.0	50.0

Metric Bite Type Fittings

Straight Adjustable Coupling
D8067 Series

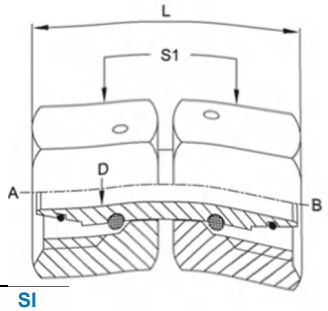

PART NO.SIZE	A TUBE 0.D	BTUBE 0.0	A THO	B THO	A DRILL	B DRILL	L LOTH	SI HEX
D8067-L06-06	6	6	M12 x 1.5	M12 x 1.5	2.5	2.5	38.0	14.0
D8067-L08-08	8	8	M14 x 1.5	M14 x 1.5	4.0	4.0	35.0	17.0
D8067-L10-10	10	10	M16 x 1.5	M16 x 1.5	6.0	6.0	39.0	19.0
D8067-L12-12	12	12	M18 x 1.5	M18 x 1.5	8.0	8.0	39.0	22.0
D8067-L15-15	15	15	M22 x 1.5	M22 x 1.5	10.0	10.0	43.0	27.0
D8067-L18-18	18	18	M26 x 1.5	M26 x 1.5	13.0	13.0	39.0	32.0
D8067-L22-22	22	22	M30 x 2	M30 x 2	17.0	17.0	40.0	36.0
D8067-L28-28	28	28	M36 x 2	M36 x 2	22.0	22.0	43.0	41.0
D8067-L35-35	35	35	M45 x 2	M45 x 2	28.0	28.0	55.0	50.0
D8067-L42-42	42	42	M52 x 2	M52 x 2	34.0	34.0	57.0	60.0
D8067-S-06-06	6	6	M14 x 1.5	M14 x 1.5	2.5	2.5	38.0	17.0
D8067-S-08-08	8	8	M16 x 1.5	M16 x 1.5	4.0	4.0	39.0	19.0
D8067-S-10-10	10	10	M18 x 1.5	M18 x 1.5	6.0	6.0	43.0	22.0
D8067-S-12-12	12	12	M20 x 1.5	M20 x 1.5	8.0	8.0	43.0	24.0
D8067-S-14-14	14	14	M22 x 1.5	M22 x 1.5	9.0	9.0	48.0	27.0
D8067-S-16-16	16	16	M24 x 1.5	M24 x 1.5	11.0	11.0	48.0	30.0
D8067-S-20-20	20	20	M30 x 2	M30 x 2	14.0	14.0	56.0	36.0
D8067-S-25-25	25	25	M36 x 2	M36 x 2	18.0	18.0	62.0	46.0
D8067-S-30-30	30	30	M42 x 2	M42 x 2	23.0	23.0	68.0	50.0
D8067-S-38-38	38	38	M52 x 2	M52 x 2	30.0	30.0	80.0	60.0

Welding Boss Body Only
D8097 Series

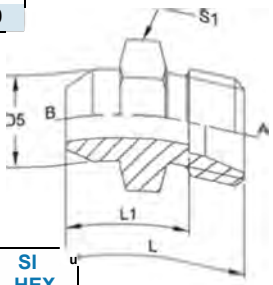

PART NO.SIZE	A TUBE OJ)	BTUBE 0.0	09 D1A	A THO	A DRILL	B DRILL	LI LOTH	L LOTH	SI HEX
D8097-L06-06	6	6	10	M12 x 1.5	4.0	4.0	14.0	21.0	12.0
D8097-L08-08	8	8	12	M14 x 1.5	6.0	6.0	16.0	23.0	14.0
D8097-L10-10	10	10	14	M16 x 1.5	8.0	8.0	18.0	25.0	17.0
D8097-L12-12	12	12	16	M18 x 1.5	10.0	10.0	18.0	25.0	19.0
D8097-L15-15	15	15	19	M22 x 1.5	12.0	12.0	22.0	29.0	24.0
D8097-L22-22	22	22	27	M30 x 2	19.0	19.0	28.5	36.0	32.0
D8097-L35-35	35	35	40	M45 x 2	30.0	30.0	32.5	43.0	46.0
D8097-S06-06	6	6	11	M14x 1.5	4.0	4.0	19.0	26.0	14.0
D8097-S08-08	8	8	13	M16 x 1.5	5.0	5.0	21.0	28.0	17.0
D8097-S10-10	10	10	15	M18 x 1.5	7.0	7.0	22.5	30.0	19.0
D8097-S12-12	12	12	17	M20 x 1.5	8.0	8.0	24.5	32.0	22.0
D8097-S14-14	14	14	19	M22 x 1.5	10.0	10.0	26.5	35.0	24.0
D8097-S16-16	16	16	21	M24 x 1.5	12.0	12.0	26.5	35.0	27.0
D8097-S20-20	20	20	26	M30 x 2	16.0	16.0	29.5	40.0	32.0
D8097-S25-25	25	25	31	M36 x 2	20.0	20.0	32.0	44.0	41.0
D8097-S30-30	30	30	36	M42 x 2	25.0	25.0	35.5	49.0	46.0
D8097-S38-38	38	38	44	M52 x 2	32.0	32.0	38.0	54.0	55.0

Welding Boss
D8097-NBR Series

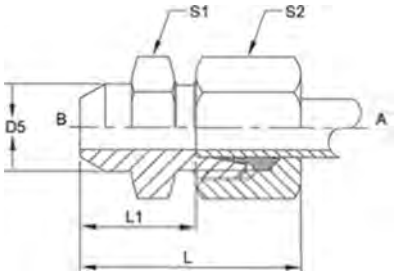

PART NO. SIZE	A TUBE 0.0	BTUBE 0.0	05 OIA	A THD	A DRILL	B ORILI	11 LETH	I LETH	SI HEX	S2 HEX
D8097-L06-06- N B R	6	6	10	M12 x 1.5	4.0	4.0	14.0	28.5	12.0	14.0
D8097-L08-08-NBR	8	8	12	M14 x 1.5	6.0	6.0	16.0	30.5	14.0	17.0
D8097-L10-10-NBR	10	10	14	M16 x 1.5	8.0	8.0	18.0	32.5	17.0	19.0
D8097-L12-12-NBR	12	12	16	M18 x 1.5	10.0	10.0	18.0	32.5	19.0	22.0
D8097-L15-15-NBR	15	15	19	M22 x 1.5	12.0	12.0	22.0	37.0	24.0	27.0
D8097-L22-22-NBR	22	22	27	M30 x 2	19.0	19.0	28.5	44.5	32.0	36.0
D8097-L35-35-NBR	35	35	40	M45 x 2	30.0	30.0	32.5	54.0	46.0	50.0
D8097-S06-06-NBR	6	6	11	M14 x 1.5	4.0	4.0	19.0	33.5	14.0	17.0
D8097-S08-08-N BR	8	8	13	M16 x 1.5	5.0	5.0	21.0	35.5	17.0	19.0
D8097-S10-10-NBR	10	10	15	M18 x 1.5	7.0	7.0	22.5	38.5	19.0	22.0
D8097-S12-12-N BR	12	12	17	M20 x 1.5	8.0	8.0	24.5	40.5	22.0	24.0
D8097-S14-14-NBR	14	14	19	M22 x 1.5	10.0	10.0	26.5	44.5	24.0	27.0
D8097-S16-16-N BR	16	16	21	M24 x 1.5	12.0	12.0	26.5	44.5	27.0	30.0
D8097-S20-20-NBR	20	20	26	M30 x 2	16.0	16.0	29.5	51.0	32.0	36.0
D8097-S25-25-NBR	25	25	31	M36 x 2	20.0	20.0	32.0	56.0	41.0	46.0
D8097-S30-30-NBR	30	30	36	M42 x 2	25.0	25.0	35.5	62.0	46.0	50.0
D8097-S38-38- N BR	38	38	44	M52 x 2	32.0	32.0	38.0	68.5	55.0	60.0

Male Stud Elbow
Metric Taper Body Only
D8233 Series

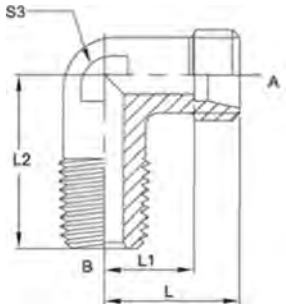

PART NO. SIZE	A TUBE 0.0	A THD	B THD	A ORILI	B ORILL	11 LETH	L LETH	L2 LETH	S3 FLATS
D8233-E04-08	4	M8 x 1	M8 x 1	3.0	3.5	11.0	15.0	17.0	9.0
D8233-E06-10	6	MIOxI	MIOxI	4.5	4.5	9.5	15.0	17.0	9.0
D8233-L08-12	8	M14 x 1.5	M12 x 1.5	6.0	6.0	14.0	21.0	26.0	12.0
D8233-L10-14	10	M16 x 1.5	M14 x 1.5	8.0	7.0	15.0	22.0	27.0	14.0
D8233-L15-18	15	M22 x 1.5	M18 x 1.5	12.0	11.0	21.0	28.0	32.0	19.0
D8233-L18-22	18	M26 x 1.5	M22 x 1.5	15.0	14.0	23.5	31.0	36.0	24.0
D8233-S06-12	6	M14 x 1.5	M12 x 1.5	4.0	4.0	16.0	23.0	26.0	12.0
D8233-S10-16	10	M18 x 1.5	M16 x 1.5	7.0	7.0	17.5	25.0	28.0	17.0
D8233-S12-18	12	M20 x 1.5	M18 x 1.5	8.0	8.0	21.5	29.0	28.0	17.0
D8233-S14-20	14	M22 x 1.5	M20 x 1.5	10.0	10.0	21.5	30.0	32.0	19.0
D8233-S16-22	16	M24 x 1.5	M22 x 1.5	12.0	12.0	24.5	33.0	32.0	24.0

Male Stud Elbow Metric Taper

D8233-NBR Series

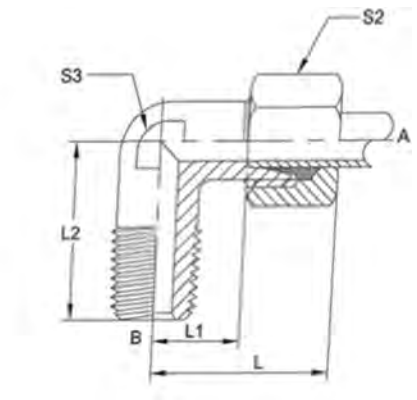

PART NO. SIZE	A TUBE 0.0	A THD	B THD	A DRILL	B DRILL	LI LGTH	L LGTH	L2 LGTH	S3 FLATS	S2 HEX
D8233-E04-08-NBR	4	M8 x 1	M8 x 1	3.0	3.5	11.0	20.5	17.0	9.0	10.0
D8233-E06-10-NBR	6	MIOxl	MIOxl	4.5	4.5	9.5	21.0	17.0	9.0	12.0
D8233-L08-12-NBR	8	M14 x 1.5	M12 x 1.5	6.0	6.0	14.0	28.5	26.0	12.0	17.0
D8233-L10-14-NBR	10	M16 x 1.5	M14 x 1.5	8.0	7.0	15.0	29.5	27.0	14.0	19.0
D8233-L15-18-NBR	15	M22 x 1.5	M18 x 1.5	12.0	11.0	21.0	36.0	32.0	19.0	27.0
D8233-L18-22-NBR	18	M26 x 1.5	M22 x 1.5	15.0	14.0	23.5	39.5	36.0	24.0	32.0
D8233-S06-12-NBR	6	M14 x 1.5	M12 x 1.5	4.0	4.0	16.0	30.5	26.0	12.0	17.0
D8233-S10-16-NBR	10	M18 x 1.5	M16 x 1.5	7.0	7.0	17.5	33.5	28.0	17.0	22.0
D8233-S12-18-NBR	12	M20 x 1.5	M18 x 1.5	8.0	8.0	21.5	37.5	28.0	17.0	24.0
D8233-S14-20-NBR	14	M22 x 1.5	M20 x 1.5	10.0	10.0	21.5	39.5	32.0	19.0	27.0
D8233-S16-22-NBR	16	M24 x 1.5	M22 x 1.5	12.0	12.0	24.5	42.5	32.0	24.0	30.0

Male Stud Elbow BSPT Body Only

D8243 Series

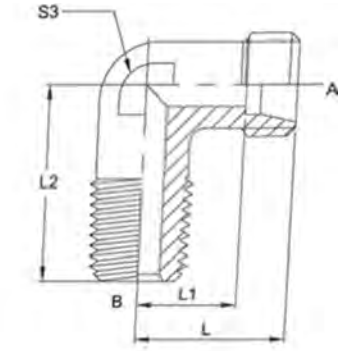

PART NO. SIZE	A TUBE O.D	A THD	B BSPT	A DRILL	B DRILL	LI LGTH	L LGTH	L2 LGTH	S3 FIATS
D8243-E04-02	4	M8 x 1	R 1/8	3.0	4.0	11.0	15.0	17.0	9.0
D8243-E06-02	6	M10 x 1	R 1/8	4.5	4.5	9.5	15.0	17.0	9.0
D8243-E08-02	8	M12 x 1	R 1/8	6.0	6.0	11.5	17.0	20.0	12.0
D8243-L06-02	6	M12 x 1.5	R 1/8	4.0	4.0	12.0	19.0	20.0	12.0
D8243-L06-04	6	M12 x 1.5	R 1/4	4.0	6.0	12.0	19.0	26.0	12.0
D8243-L08-04	8	M14x 1.5	R 1/4	6.0	6.0	14.0	21.0	26.0	12.0
D8243-L10-04	10	M16 x 1.5	R 1/4	8.0	7.0	15.0	22.0	27.0	14.0
D8243-L12-06	12	M18x 1.5	R 3/8	10.0	9.0	17.0	24.0	28.0	17.0
D8243-L15-08	15	M22 x 1.5	R 1/2	12.0	11.0	21.0	28.0	34.0	19.0
D8243-L18-08	18	M26 x 1.5	R 1/2	15.0	14.0	23.5	31.0	36.0	24.0
D8243-S06-04	6	M14 x 1.5	R 1/4	4.0	4.0	16.0	23.0	26.0	12.0
D8243-S08-04	8	M16x 1.5	R 1/4	5.0	5.0	17.0	24.0	27.0	14.0
D8243-S10-06	10	M18 x 1.5	R 3/8	7.0	7.0	17.5	25.0	28.0	17.0
D8243-S12-06	12	M20 x 1.5	R 3/8	8.0	8.0	21.5	29.0	28.0	17.0
D8243-S14-08	14	M22 x 1.5	R 1/2	10.0	10.0	21.5	30.0	32.0	19.0
D8243-S16-08	16	M24x 1.5	R 1/2	12.0	12.0 1	24.5	33.0	32.0	24.0

Male Stud Elbow BSPT
D8243-NBR Series

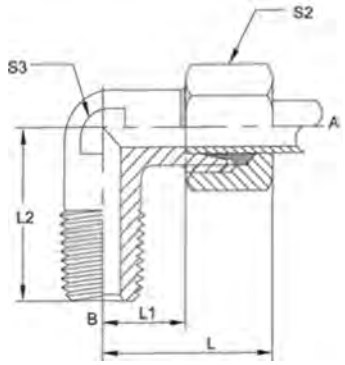

PART NO. SIZE	A TUBE 0.0	A THD	B BSPT	A DRIU	B DRIU	11 LOTH	1 LOTH	L2 LOTH	S3 FIATS	S2 HEX
D8243-E04-02-NBR	4	M8 x 1	R 1/8	3.0	4.0	11.0	20.5	17.0	9.0	10.0
D8243-E06-02-NBR	6	MIOxI	R 1/8	4.5	4.5	9.5	21.0	17.0	9.0	12.0
D8243-E08-02-NBR	8	M12 x 1	R 1/8	6.0	6.0	11.5	23.0	20.0	12.0	14.0
D8243-L06-02-NBR	6	M12 x 1.5	R 1/8	4.0	4.0	12.0	26.5	20.0	12.0	14.0
D8243-L06-04-N BR	6	M12 x 1.5	R 1/4	4.0	6.0	12.0	26.5	26.0	12.0	14.0
D8243-L08-04-NBR	8	M14x 1.5	R 1/4	6.0	6.0	14.0	28.5	26.0	12.0	17.0
D8243-L10-04-N BR	10	M16 x 1.5	R 1/4	8.0	7.0	15.0	29.5	27.0	14.0	19.0
D8243-L12-06-NBR	12	M18 x 1.5	R 3/8	10.0	9.0	17.0	31.5	28.0	17.0	22.0
D8243-L15-08-N BR	15	M22 x 1.5	R 1/2	12.0	11.0	21.0	36.0	34.0	19.0	27.0
D8243-L18-08-N BR	18	M26 x 1.5	R 1/2	15.0	14.0	23.5	39.5	36.0	24.0	32.0
D8243-S06-04-N BR	6	M14 x 1.5	R 1/4	4.0	4.0	16.0	30.5	26.0	12.0	17.0
D8243-S08-04-N BR	8	M16 x 1.5	R 1/4	5.0	5.0	17.0	31.5	27.0	14.0	19.0
D8243-S10-06-N BR	10	M18 x 1.5	R 3/8	7.0	7.0	17.5	33.5	28.0	17.0	22.0
D8243-S12-06-N BR	12	M20 x 1.5	R 3/8	8.0	8.0	21.5	37.5	28.0	17.0	24.0
D8243-S14-08-N BR	14	M22 x 1.5	R 1/2	10.0	10.0	21.5	39.5	32.0	19.0	27.0
D8243-S16-08-N BR	16	M24 x 1.5	R 1/2	12.0	12.0	24.5	42.5	32.0	24.0	30.0

Male Stud Elbow NPTF Body Only
D8250 Series

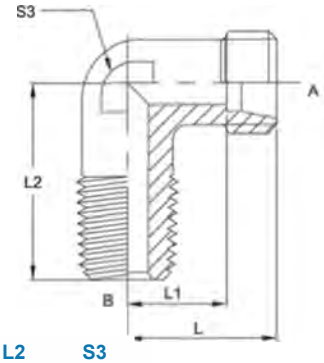

PART NO. SIZE	A TUBE 0.0	A THD	B THD	A DRIU	B DRIU	11 LGTH	L LGTH	L2 LGTH	S3 FLATS
D8250-E04-02	4	M8 x 1	1/8 NPTF	3.0	4.0	11.0	15.0	17.0	9.0
D8250-E08-02	8	M12 x 1	1/8 NPTF	6.0	6.0	11.5	17.0	20.0	12.0
D8250-L06-02	6	M12 x 1.5	1/8 NPTF	4.0	4.0	12.0	19.0	20.0	12.0
D8250-L06-04	6	M12x 1.5	1/4 NPTF	4.0	6.0	12.0	19.0	26.0	12.0
D8250-L08-04	8	M14x 1.5	1/4 NPTF	6.0	6.0	14.0	21.0	26.0	12.0
D8250-L10-04	10	M16 x 1.5	1/4 NPTF	8.0	7.0	15.0	22.0	27.0	14.0
D8250-L12-04	12	M18 x 1.5	1/4 NPTF	10.0	7.0	17.0	24.0	28.0	17.0
D8250-L12-06	12	M18 x 1.5	3/8 NPTF	10.0	9.0	17.0	24.0	28.0	17.0
D8250-L15-08	15	M22 x 1.5	1/2 NPTF	12.0	11.0	21.0	28.0	34.0	19.0
D8250-L18-08	18	M26 x 1.5	1/2 NPTF	15.0	14.0	23.5	31.0	36.0	24.0
D8250-L22-12	22	M30 x 2	3/4 NPTF	19.0	18.0	27.5	35.0	40.5	27.0
D8250-S06-04	6	M14 x 1.5	1/4 NPTF	4.0	4.0	16.0	23.0	26.0	12.0
D8250-S08-04	8	M16 x 1.5	1/4 NPTF	5.0	5.0	17.0	24.0	27.0	14.0
D8250-S10-06	10	M18 x 1.5	3/8 NPTF	7.0	7.0	17.5	25.0	28.0	17.0
D8250-S12-06	12	M20 x 1.5	3/8 NPTF	8.0	8.0	21.5	29.0	28.0	17.0
D8250-S16-08	16	M24x 1.5	1/2 NPTF	12.0	12.0	24.5	33.0	32.0	24.0

Metric Bite Type Fittings

Male Stud Elbow NPTF
D8250-NBR Series

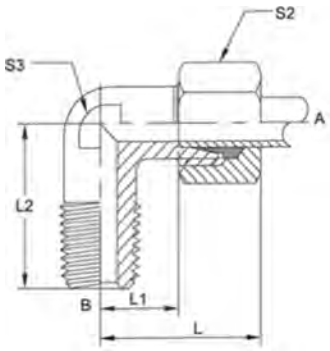

PAST NO. SIZE	A TUBE O.D	A THD	B THD	A DRILL	B DRILL	LI LBTH	L2 LBTH	L LBTH	S3 FLATS	S2 HEX
D8250-E04-02-NBR	4	M8 x 1	1/8 NPTF	3.0	4.0	11.0	20.5	17.0	9.0	10.0
D8250-E08-02-N BR	8	M12 x 1	1/8 NPTF	6.0	6.0	11.5	23.0	20.0	12.0	14.0
D8250-L06-02-N BR	6	M12 x 1.5	1/8 NPTF	4.0	4.0	12.0	26.5	20.0	12.0	14.0
D8250-L06-04-NBR	6	M12 x 1.5	1/4 NPTF	4.0	6.0	12.0	26.5	26.0	12.0	14.0
D8250- L08-04- N B R	8	M14 x 1.5	1/4 NPTF	6.0	6.0	14.0	28.5	26.0	12.0	17.0
D8250-L10-04-N BR	10	M16 x 1.5	1/4 NPTF	8.0	7.0	15.0	29.5	27.0	14.0	19.0
D8250-L12-04-N BR	12	M18 x 1.5	1/4 NPTF	10.0	7.0	17.0	31.5	28.0	17.0	22.0
D8250-L12-06-N BR	12	M18 x 1.5	3/8 NPTF	10.0	9.0	17.0	31.5	28.0	17.0	22.0
D8250-L15-08-N BR	15	M22 x 1.5	1/2 NPTF	12.0	11.0	21.0	36.0	34.0	19.0	27.0
D8250-L18-08-N BR	18	M26 x 1.5	1/2 NPTF	15.0	14.0	23.5	39.5	36.0	24.0	32.0
D8250-L22-12-NBR	22	M30 x 2	3/4 NPTF	19.0	18.0	27.5	43.5	40.5	27.0	36.0
D8250-S06-04-N B R	6	M14x 1.5	1/4 NPTF	4.0	4.0	16.0	30.5	26.0	12.0	17.0
D8250-S08-04-N B R	8	M16 x 1.5	1/4 NPTF	5.0	5.0	17.0	31.5	27.0	14.0	19.0
D8250-S10-06-NBR	10	M18x 1.5	3/8 NPTF	7.0	7.0	17.5	33.5	28.0	17.0	22.0
D8250-S12-06-N BR	12	M20 x 1.5	3/8 NPTF	8.0	8.0	21.5	37.5	28.0	17.0	24.0
D8250-S16-08-NBR	16	M24x 1.5	1/2 NPTF	12.0	12.0	24.5	42.5	32.0	24.0	30.0

Elbow Coupling Body Only
D8260 Series

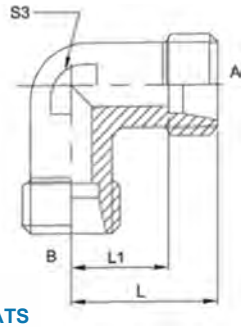

PART NO. SIZE	A TUBE 0.D	B TUBE O.D	A THD	B THD	A DRILL	B DRILL	LI LBTH	I LBTH	S3 FLATS
D8260-E04-04	4	4	M8 x 1	M8 x 1	3.0	3.0	11.0	15.0	9.0
D8260-E06-06	6	6	MIOxI	MIOxI	4.5	4.5	9.5	15.0	9.0
D8260-E08-08	8	8	M12 x 1	M12 x 1	6.0	6.0	11.5	17.0	12.0
D8260-L06-06	6	6	M12 x 1.5	M12 x 1.5	4.0	4.0	12.0	19.0	12.0
D8260-L08-08	8	8	M14 x 1.5	M14x 1.5	6.0	6.0	14.0	21.0	12.0
D8260-L10-10	10	10	M16 x 1.5	M16 x 1.5	8.0	8.0	15.0	22.0	14.0
D8260-L12-12	12	12	M18 x 1.5	M18 x 1.5	10.0	10.0	17.0	24.0	17.0
D8260-L15-15	15	15	M22 x 1.5	M22x 1.5	12.0	12.0	21.0	28.0	19.0
D8260-L18-18	18	18	M26 x 1.5	M26 x 1.5	15.0	15.0	23.5	31.0	24.0
D8260-L22-22	22	22	M30 x 2	M30 x 2	19.0	19.0	27.5	35.0	27.0
D8260-L28-28	28	28	M36 x 2	M36 x 2	24.0	24.0	30.5	38.0	36.0
D8260-L35-35	35	35	M45 x 2	M45 x 2	30.0	30.0	34.5	45.0	41.0
D8260-L42-42	42	42	M52 x 2	M52 x 2	36.0	36.0	40.0	51.0	50.0
D8260-S06-06	6	6	M14 x 1.5	M14 x 1.5	4.0	4.0	16.0	23.0	12.0
D8260-S08-08	8	8	M16 x 1.5	M16 x 1.5	5.0	5.0	17.0	24.0	14.0
D8260-S10-10	10	10	M18 x 1.5	M18 x 1.5	7.0	7.0	17.5	25.0	17.0
D8260-S12-12	12	12	M20 x 1.5	M20 x 1.5	8.0	8.0	21.5	29.0	17.0
D8260-S14-14	14	14	M22x 1.5	M22 x 1.5	10.0	10.0	21.5	30.0	19.0
D8260-S16-16	16	16	M24 x 1.5	M24 x 1.5	12.0	12.0	24.5	33.0	24.0
D8260-S20-20	20	20	M30 x 2	M30 x 2	16.0	16.0	26.5	37.0	27.0
D8260-S25-25	25	25	M36 x 2	M36 x 2	20.0	20.0	30.0	42.0	36.0
D8260-S30-30	30	30	M42 x 2	M42 x 2	25.0	25.0	35.5	49.0	41.0
D8260-S38-38	38	38	M52 x 2	M52 x 2	32.0	32.0	41.0	57.0	50.0

Elbow Coupling
D8260-NBR Series

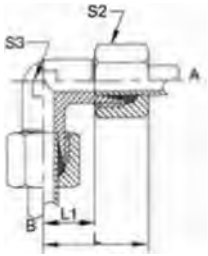

PART NO. SIZE	« TUBE 0.0	BTUBE 0.0	« THO	B THO	A DRILL	B DRILL	LI LGTH	L LGTH	S3 FIATS	S2 HEX
D8260-E04-04-NBR	4	4	M8 x 1	M8 x 1	3.0	3.0	11.0	20.5	9.0	10.0
D8260-E06-06-NBR	6	6	M10 x 1	MIOxI	4.5	4.5	9.5	21.0	9.0	12.0
D8260-E08-08-N BR	8	8	M12 x 1	M12 x 1	6.0	6.0	11.5	23.0	12.0	14.0
D8260-L06-06-NBR	6	6	M12 x 1.5	M12 x 1.5	4.0	4.0	12.0	26.5	12.0	14.0
D8260-L08-08-NBR	8	8	M14x 1.5	M14 x 1.5	6.0	6.0	14.0	28.5	12.0	17.0
D8260-L10-10-NBR	10	10	M16 x 1.5	M16 x 1.5	8.0	8.0	15.0	29.5	14.0	19.0
D8260-L12-12-NBR	12	12	M18 x 1.5	M18 x 1.5	10.0	10.0	17.0	31.5	17.0	22.0
D8260-L15-15-NBR	15	15	M22 x 1.5	M22 x 1.5	12.0	12.0	21.0	36.0	19.0	27.0
D8260-L18-18-NBR	18	18	M26 x 1.5	M26 x 1.5	15.0	15.0	23.5	39.5	24.0	32.0
D8260-L22-22-NBR	22	22	M30 x 2	M30x2	19.0	19.0	27.5	43.5	27.0	36.0
D8260-L28-28-NBR	28	28	M36 x 2	M36 x 2	24.0	24.0	30.5	47.0	36.0	41.0
D8260-L35-35-NBR	35	35	M45 x 2	M45 x 2	30.0	30.0	34.5	56.0	41.0	50.0
D8260-L42-42-NBR	42	42	M52 x 2	M52 x 2	36.0	36.0	40.0	62.5	50.0	60.0
D8260-S06-06-NBR	6	6	M14 x 1.5	M14x 1.5	4.0	4.0	16.0	30.5	12.0	17.0
D8260-S08-08-NBR	8	8	M16x 1.5	M16 x 1.5	5.0	5.0	17.0	31.5	14.0	19.0
D8260-S10-10-NBR	10	10	M18x 1.5	M18 x 1.5	7.0	7.0	17.5	33.5	17.0	22.0
D8260-S12-12-N BR	12	12	M20 x 1.5	M20 x 1.5	8.0	8.0	21.5	37.5	17.0	24.0
D8260-S14-14-NBR	14	14	M22 x 1.5	M22 x 1.5	10.0	10.0	21.5	39.5	19.0	27.0
D8260-S16-16-N BR	16	16	M24 x 1.5	M24 x 1.5	12.0	12.0	24.5	42.5	24.0	30.0
D8260-S20-20-N BR	20	20	M30 x 2	M30 x 2	16.0	16.0	26.5	48.0	27.0	36.0
D8260-S25-25-N BR	25	25	M36 x 2	M36 x 2	20.0	20.0	30.0	54.0	36.0	46.0
D8260-S30-30-N BR	30	30	M42 x 2	M42 x 2	25.0	25.0	35.5	62.0	41.0	50.0
D8260-S38-38-N BR	38	38	M52 x 2	M52 x 2	32.0	32.0	41.0	71.5	50.0	60.0

Bulkhead Elbow Body
D8261 Series

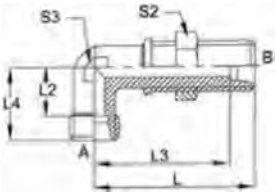

PART NO. SIZE	A TUBE 0.0	BTUBE 0.0	A THO	B THO	A DRILL	B DRILL	12 LGTH	L4 LGTH	L3 LGTH	L LGTH	S3 FLATS	S2 HEX
D8261-LN-L08-08-N BR	8	8	M14 x 1.5	M14 x 1.5	6.0	6.0	14.0	21.0	44.0	51.0	12.0	19.0
D8261-LN-L12-12-NBR	12	12	M18 x 1.5	M18 x 1.5	10.0	10.0	17.0	24.0	49.0	56.0	17.0	24.0
D8261-LN-L15-15-NBR	15	15	M22 x 1.5	M22x 1.5	12.0	12.0	21.0	28.0	54.0	61.0	19.0	27.0
D8261-LN-S12-12-NBR	12	12	M20 x 1.5	M20x 1.5	8.0	8.0	21.5	29.0	51.5	59.0	17.0	27.0
D8261-LN-S20-20-NBR	20	20	M30 x 2	M30 x 2	16.0	16.0	26.5	37.0	63.5	74.0	27.0	41.0
D8261-LN-S30-30-N BR	30	30	M42 x 2	M42 x 2	25.0	25.0	35.5	49.0	76.5	90.0	41.0	50.0
D8261-LN-S38-38-N BR	38	38	M52 x 2	M52 x 2	32.0	32.0	41.0	57.0	80.0	96.0	50.0	65.0

Bulkhead Elbow
D8261-NBR Series

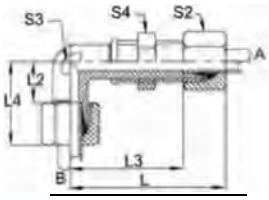

PART NO. SIZE	A TUBE 0.0	BTUBE 0.0	A THO	B THO	A DRILL	B DRILL	L2 LGTH	L4 LGTH	L3 LGTH	L LGTH	S3 FLATS	S2 HEX	S4 HEX
D8261-LN-L08-08-NBR	8	8	M14x 1.5	M14x 1.5	6.0	6.0	14.0	28.5	44.0	58.5	12.0	19.0	17.0
D8261-LN-L12-12-NBR	12	12	M18x 1.5	M18 x 1.5	10.0	10.0	17.0	31.5	49.0	63.5	17.0	24.0	22.0
D8261-LN-L15-15-NBR	15	15	M22 x 1.5	M22 x 1.5	12.0	12.0	21.0	36.0	54.0	69.0	19.0	27.0	27.0
D8261-LN-S12-12-NBR	12	12	M20 x 1.5	M20 x 1.5	8.0	8.0	21.5	37.5	51.5	67.5	17.0	27.0	24.0
D8261-LN-S20-20-NBR	20	20	M30 x 2	M30 x 2	16.0	16.0	26.5	48.0	63.5	85.0	27.0	41.0	36.0
D8261-LN-S30-30-NBR	30	30	M42 x 2	M42 x 2	25.0	25.0	35.5	62.0	76.5	103.0	41.0	50.0	50.0
D8261-LN-S38-38-NBR	38	38	M52 x 2	M52 x 2	32.0	32.0	41.0	71.5	80.0	110.5	50.0	65.0	60.0

Metric Bite Type Fittings

Adjustable Elbow with Tube Connection Body Only
D8263 Series

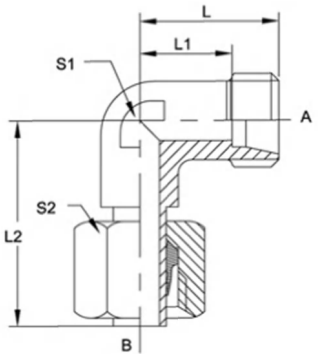

PART NO.SIZE	A TUBE 0.0	BTUBE 0.0	A THD	B THD	A DRILL	B ORILL	LI LOTH	L2 LOTH	L LOTH	SI FIATS	S2 HEX
D8263-L06-06-N BR	6	6	M12 x 1.5	M12x 1.5	4.0	3.5	12.0	19.0	26.0	12.0	14.0
D8263-L08-08-NBR	8	8	M14 x 1.5	M14 x 1.5	6.0	4.5	14.0	21.0	27.5	12.0	17.0
D8263-L10-10-NBR	10	10	MI 6 x 1.5	M16 x 1.5	8.0	7.0	15.0	22.0	29.0	14.0	19.0
D8263-L12-12-NBR	12	12	M18 x 1.5	M18x 1.5	10.0	7.5	17.0	24.0	29.5	17.0	22.0
D8263-L15-15-NBR	15	15	M22 x 1.5	M22 x 1.5	12.0	11.0	21.0	28.0	32.5	19.0	27.0
D8263-L18-18-NBR	18	18	M26 x 1.5	M26x 1.5	15.0	14.0	23.5	31.0	35.5	24.0	32.0
D8263-L22-22-NBR	22	22	M30 x 2	M30 x 2	19.0	18.0	27.5	35.0	38.5	27.0	36.0
D8263-L28-28-NBR	28	28	M36 x 2	M36 x 2	24.0	23.0	30.5	38.0	41.5	36.0	41.0
D8263-L35-35-N BR	35	35	M45 x 2	M45 x 2	30.0	29.5	34.5	45.0	51.0	41.0	50.0
D8263-L42-42-N BR	42	42	M52 x 2	M52 x 2	36.0	35.5	40.0	51.0	56.0	50.0	60.0
D8263-S06-06-NBR	6	6	M14x 1.5	M14 x 1.5	4.0	3.5	16.0	23.0	27.0	12.0	17.0
D8263-S08-08-NBR	8	8	M16 x 1.5	M16x 1.5	5.0	4.5	17.0	24.0	27.5	14.0	19.0
D8263-S10-10-NBR	10	10	M18 x 1.5	M18x 1.5	7.0	7.0	17.5	25.0	30.0	17.0	22.0
D8263-S12-12-NBR	12	12	M20 x 1.5	M20x 1.5	8.0	6.5	21.5	29.0	31.0	17.0	24.0
D8263-S14-14-NBR	14	14	M22 x 1.5	M22 x 1.5	10.0	9.5	21.5	30.0	33.5	19.0	27.0
D8263-S16-16-NBR	16	16	M24 x 1.5	M24 x 1.5	12.0	11.5	24.5	33.0	36.5	24.0	30.0
D8263-S20-20-NBR	20	20	M30 x 2	M30 x 2	16.0	15.5	26.5	37.0	44.5	27.0	36.0
D8263-S25-25-NBR	25	25	M36 x 2	M36 x 2	20.0	18.0	30.0	42.0	50.0	36.0	46.0
D8263-S30-30-NBR	30	30	M42 x 2	M42 x 2	25.0	23.0	35.5	49.0	55.0	41.0	50.0
D8263-S38-38-NBR	38	38	M52 x 2	M52 x 2	32.0	29.0	41.0	57.0	63.0	50.0	60.0

F-042

Adjustable Elbow with Tube Connection
D8263-NBR Series

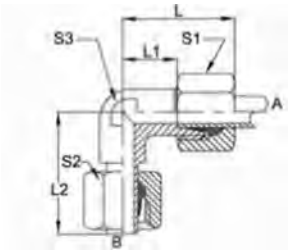

PART NO.SIZE	A TUBE 0.0	BTUBE 0.0	A THO	B THD	A DRILL	B ORILL	LI LGTH	I LGTH	L2 LGTH	S3 FIATS	Si HEX	S2 HEX
D8263-L06-06-NBR	6	6	M12 x 1.5	M12 x 1.5	4.0	3.5	12.0	26.5	26.0	12.0	14.0	14.0
D8263-L08-08-NBR	8	8	M14 x 1.5	M14 x 1.5	6.0	4.5	14.0	28.5	27.5	12.0	17.0	17.0
D8263-L10-10-NBR	10	10	M16 x 1.5	M16 x 1.5	8.0	7.0	15.0	29.5	29.0	14.0	19.0	19.0
D8263-L12-12-NBR	12	12	M18 x 1.5	M18 x 1.5	10.0	7.5	17.0	31.5	29.5	17.0	22.0	22.0
D8263-L15-15-NBR	15	15	M22 x 1.5	M22 x 1.5	12.0	11.0	21.0	36.0	32.5	19.0	27.0	27.0
D8263-L18-18-NBR	18	18	M26 x 1.5	M26 x 1.5	15.0	14.0	23.5	39.5	35.5	24.0	32.0	32.0
D8263-L22-22-N BR	22	22	M30 x 2	M30 x 2	19.0	18.0	27.5	43.5	38.5	27.0	36.0	36.0
D8263-L28-28-NBR	28	28	M36 x 2	M36 x 2	24.0	23.0	30.5	47.0	41.5	36.0	41.0	41.0
D8263-L35-35-NBR	35	35	M45 x 2	M45 x 2	30.0	29.5	34.5	56.0	51.0	41.0	50.0	50.0
D8263-L42-42-N BR	42	42	M52 x 2	M52 x 2	36.0	35.5	40.0	62.5	56.0	50.0	60.0	60.0
D8263-S06-06-N BR	6	6	M14 x 1.5	M14 x 1.5	4.0	3.5	16.0	30.5	27.0	12.0	17.0	17.0
D8263-S08-08-NBR	8	8	M16 x 1.5	M16 x 1.5	5.0	4.5	17.0	31.5	27.5	14.0	19.0	19.0
D8263-S10-10-NBR	10	10	M18 x 1.5	M18 x 1.5	7.0	7.0	17.5	33.5	30.0	17.0	22.0	22.0
D8263-S12-12-NBR	12	12	M20 x 1.5	M20 x 1.5	8.0	6.5	21.5	37.5	31.0	17.0	24.0	24.0
D8263-S14-14-NBR	14	14	M22 x 1.5	M22 x 1.5	10.0	9.5	21.5	39.5	33.5	19.0	27.0	27.0
D8263-S16-16-NBR	16	16	M24 x 1.5	M24 x 1.5	12.0	11.5	24.5	42.5	36.5	24.0	30.0	30.0
D8263-S20-20-NBR	20	20	M30 x 2	M30 x 2	16.0	15.5	26.5	48.0	44.5	27.0	36.0	36.0
D8263-S25-25-N BR	25	25	M36 x 2	M36 x 2	20.0	18.0	30.0	54.0	50.0	36.0	46.0	46.0
D8263-S30-30-N BR	30	30	M42 x 2	M42 x 2	25.0	23.0	35.5	62.0	55.0	41.0	50.0	50.0
D8263-S38-38-N B R	38	38	M52 x 2	M52 x 2	32.0	29.0	41.0	71.5	63.0	50.0	60.0	60.0

Adjustable Elbow Body With O-ring
D8269 Series

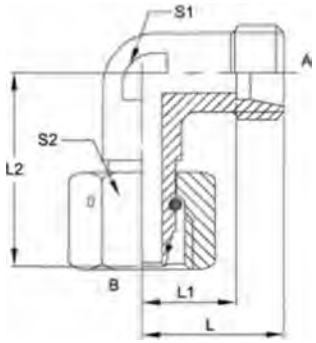

PART NO. SIZE	ATUBE 0.0	BTUBE 0.0	A THD	B THD	A DRILL	B DRILL	LI LOTH	I LGTH	L2 LGTH	SI FLATS	S2 HEX
D8269-L06-06	6	6	M12 x 1.5	M12 x 1.5	4.0	2.5	12.0	19.0	27.0	12.0	14.0
D8269-L08-08	8	8	M14 x 1.5	M14 x 1.5	6.0	4.0	14.0	21.0	27.5	12.0	17.0
D8269-L10-10	10	10	M16 x 1.5	M16 x 1.5	8.0	6.0	15.0	22.0	30.0	14.0	19.0
D8269-L12-12	12	12	M18 x 1.5	M18 x 1.5	10.0	8.0	17.0	24.0	31.0	17.0	22.0
D8269-L15-15	15	15	M22 x 1.5	M22 x 1.5	12.0	10.0	21.0	28.0	32.5	19.0	27.0
D8269-L18-18	18	18	M26 x 1.5	M26 x 1.5	15.0	13.0	23.5	31.0	35.5	24.0	32.0
D8269-L22-22	22	22	M30 x 2	M30 x 2	19.0	17.0	27.5	35.0	38.5	27.0	36.0
D8269-L28-28	28	28	M36 x 2	M36 x 2	24.0	22.0	30.5	38.0	41.5	36.0	41.0
D8269-L35-35	35	35	M45x2	M45 x 2	30.0	28.0	34.5	45.0	51.0	41.0	50.0
D8269-L42-42	42	42	M52 x 2	M52 x 2	36.0	34.0	40.0	51.0	56.0	50.0	60.0
D8269-S06-06	6	6	M14 x 1.5	M14 x 1.5	4.0	2.5	16.0	23.0	27.0	12.0	17.0
D8269-S08-08	8	8	M16 x 1.5	M16 x 1.5	5.0	4.0	17.0	24.0	27.5	14.0	19.0
D8269-S10-10	10	10	M18 x 1.5	M18 x 1.5	7.0	6.0	17.5	25.0	30.0	17.0	22.0
D8269-S12-12	12	12	M20 x 1.5	M20 x 1.5	8.0	8.0	21.5	29.0	31.0	17.0	24.0
D8269-S14-14	14	14	M22 x 1.5	M22 x 1.5	10.0	9.0	21.5	30.0	32.5	19.0	27.0
D8269-S16-16	16	16	M24x 1.5	M24 x 1.5	12.0	11.0	24.5	33.0	36.5	24.0	30.0
D8269-S20-20	20	20	M30 x 2	M30 x 2	16.0	14.0	26.5	37.0	44.5	27.0	36.0
D8269-S25-25	25	25	M36 x 2	M36 x 2	20.0	18.0	30.0	42.0	50.0	36.0	46.0
D8269-S30-30	30	30	M42 x 2	M42 x 2	25.0	23.0	35.5	49.0	55.0	41.0	50.0
D8269-S38-38	38	38	M52 x 2	M52 x 2	32.0	30.0	41.0	57.0	63.0	50.0	60.0

Metric Bite Type Fittings

Adjustable Elbow with O-ring
D8269-NBR Series

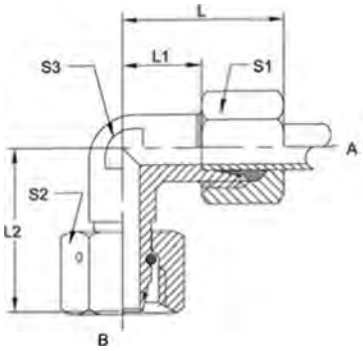

PART ND.SIZE	A TUBE 0.0	BTOBE 0.0	A THD	B THD	A DRILL	B DRILL	LI LGTH	L LGTH	L2 LGTH	S3 FLATS	SI HEX	S2 HEX
D8269- L06-06-N B R	6	6	M12 x 1.5	M12 x 1.5	4.0	2.5	12.0	26.5	27.0	12.0	14.0	14.0
D8269-L08-08-NBR	8	8	M14 x 1.5	M14 x 1.5	6.0	4.0	14.0	28.5	27.5	12.0	17.0	17.0
D8269-L10-10-N 8 R	10	10	M16 x 1.5	M16 x 1.5	8.0	6.0	15.0	29.5	30.0	14.0	19.0	19.0
D8269-L12-12-NBR	12	12	M18 x 1.5	M18 x 1.5	10.0	8.0	17.0	31.5	31.0	17.0	22.0	22.0
D8269-L15-15-NBR	15	15	M22 x 1.5	M22 x 1.5	12.0	10.0	21.0	36.0	32.5	19.0	27.0	27.0
D8269-L18-18-NBR	18	18	M26 x 1.5	M26 x 1.5	15.0	13.0	23.5	39.5	35.5	24.0	32.0	32.0
D8269- L22-22-N B R	22	22	M30 x 2	M30 x 2	19.0	17.0	27.5	43.5	38.5	27.0	36.0	36.0
D8269-L28-28-NBR	28	28	M36 x 2	M36 x 2	24.0	22.0	30.5	47.0	41.5	36.0	41.0	41.0
D8269-L35-35-NBR	35	35	M45 x 2	M45 x 2	30.0	28.0	34.5	56.0	51.0	41.0	50.0	50.0
D8269-L42-42-NBR	42	42	M52 x 2	M52 x 2	36.0	34.0	40.0	62.5	56.0	50.0	60.0	60.0
D8269-S06-06-N B R	6	6	M14 x 1.5	M14 x 1.5	4.0	2.5	16.0	30.5	27.0	12.0	17.0	17.0
D8269-S08-08-N B R	8	8	M16 x 1.5	M16 x 1.5	5.0	4.0	17.0	31.5	27.5	14.0	19.0	19.0
D8269-S10-10-N BR	10	10	M18 x 1.5	M18 x 1.5	7.0	6.0	17.5	33.5	30.0	17.0	22.0	22.0
D8269-S12-12-NBR	12	12	M20 x 1.5	M20 x 1.5	8.0	8.0	21.5	37.5	31.0	17.0	24.0	24.0
D8269-S14-14-NBR	14	14	M22 x 1.5	M22 x 1.5	10.0	9.0	21.5	39.5	32.5	19.0	27.0	27.0
D8269-S16-16-NBR	16	16	M24x 1.5	M24x 1.5	12.0	11.0	24.5	42.5	36.5	24.0	30.0	30.0
D8269-S20-20-N B R	20	20	M30 x 2	M30 x 2	16.0	14.0	26.5	48.0	44.5	27.0	36.0	36.0
D8269-S25-25-NBR	25	25	M36 x 2	M36 x 2	20.0	18.0	30.0	54.0	50.0	36.0	46.0	46.0
D8269-S30-30-N B R	30	30	M42 x 2	M42 x 2	25.0	23.0	35.5	62.0	55.0	41.0	50.0	50.0
D8269-S38-38-NBR	38	38	M52 x 2	M52 x 2	32.0	30.0	41.0	71.5	63.0	50.0	60.0	60.0

Tee Coupling Body Only
D8360 Series

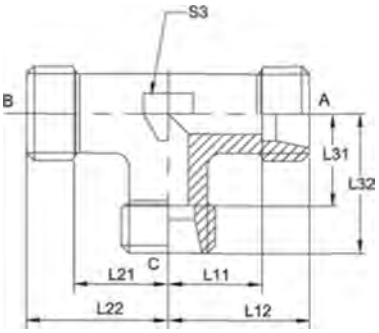

F-045

PART NO. SIZE	A TUBE O.D	B TUBE O.D	C TUBE 0.0	A THD	B THD	C THD	A DRILL	B DRILL	C DRia	L11 LGTH	L12 LGTH	L21 LGTH	L22 LGTH	131 LGTH	L32 LGTH	S3 FLATS
D8360-E04-04-04	4	4	4	M8 x 1	M8 x 1	M8 x 1	3.0	3.0	3.0	11.0	15.0	11.0	15.0	11.0	15.0	9.0
D8360-E06-06-06	6	6	6	MIOxI	MIOxI	MIOxI	4.5	4.5	4.5	9.5	15.0	9.5	15.0	9.5	15.0	9.0
D8360-E08-08-08	8	8	8	M12 x 1	M12 x 1	M12 x 1	6.0	6.0	6.0	11.5	17.0	11.5	17.0	11.5	17.0	12.0
D8360-L06-06-06	6	6	6	M12 x 1.5	M12 x 1.5	M12 x 1.5	4.0	4.0	4.0	12.0	19.0	12.0	19.0	12.0	19.0	12.0
D8360-L08-08-08	8	8	8	M14 x 1.5	M14 x 1.5	M14x 1.5	6.0	6.0	6.0	14.0	21.0	14.0	21.0	14.0	21.0	12.0
D8360-L10-10-10	10	10	10	M16x 1.5	M16x 1.5	M16x 1.5	8.0	8.0	8.0	15.0	22.0	15.0	22.0	15.0	22.0	14.0
D8360-L12-12-12	12	12	12	M18 x 1.5	M18x 1.5	M18 x 1.5	10.0	10.0	10.0	17.0	24.0	17.0	24.0	17.0	24.0	17.0
D8360-L12-12-18	12	12	18	M18 x 1.5	M18 x 1.5	M26 x 1.5	10.0	10.0	15.0	23.0	30.0	23.0	30.0	23.5	31.0	24.0
D8360-L15-15-12	15	15	12	M22 x 1.5	M22 x 1.5	M18 x 1.5	12.0	12.0	10.0	21.0	28.0	21.0	28.0	20.0	27.0	19.0
D8360-L15-15-15	15	15	15	M22 x 1.5	M22 x 1.5	M22 x 1.5	12.0	12.0	12.0	21.0	28.0	21.0	28.0	21.0	28.0	19.0
D8360-L15-15-18	15	15	18	M22 x 1.5	M22 x 1.5	M26 x 1.5	12.0	12.0	15.0	24.0	31.0	24.0	31.0	23.5	31.0	24.0
D8360-L18-18-08	18	18	8	M26 x 1.5	M26 x 1.5	M14 x 1.5	15.0	15.0	6.0	23.5	31.0	23.5	31.0	22.0	29.0	24.0
D8360-L18-18-10	18	18	10	M26 x 1.5	M26 x 1.5	M16 x 1.5	15.0	15.0	8.0	23.5	31.0	23.5	31.0	23.0	30.0	24.0
D8360-L18-18-12	18	18	12	M26x 1.5	M26 x 1.5	M18x 1.5	15.0	15.0	10.0	23.5	31.0	23.5	31.0	23.0	30.0	24.0
D8360-L18-18-15	18	18	15	M26 x 1.5	M26x 1.5	M22x 1.5	15.0	15.0	12.0	23.5	31.0	23.5	31.0	24.0	31.0	24.0
D8360-L18-18-18	18	18	18	M26 x 1.5	M26 x 1.5	M26x 1.5	15.0	15.0	15.0	23.5	31.0	23.5	31.0	23.5	31.0	24.0
D8360-L22-22-10	22	22	10	M30 x 2	M30 x 2	M16x 1.5	19.0	19.0	8.0	27.5	35.0	27.5	35.0	26.0	33.0	27.0
D8360-L22-22-12	22	22	12	M30 x 2	M30 x 2	M18 x 1.5	19.0	19.0	10.0	27.5	35.0	27.5	35.0	26.0	33.0	27.0
D8360-L22-22-15	22	22	15	M30 x 2	M30 x 2	M22 x 1.5	19.0	19.0	12.0	27.5	35.0	27.5	35.0	27.0	34.0	27.0
D8360-L22-22-18	22	22	18	M30x2	M30 x 2	M26x 1.5	19.0	19.0	15.0	27.5	35.0	27.5	35.0	26.5	34.0	27.0
D8360-L22-22-22	22	22	22	M30 x 2	M30 x 2	M30 x 2	19.0	19.0	19.0	27.5	35.0	27.5	35.0	27.5	35.0	27.0
D8360-L22-22-28	22	22	28	M30 x 2	M30 x 2	M36 x 2	19.0	19.0	24.0	30.5	38.0	30.5	38.0	30.5	38.0	36.0
D8360-L28-28-28	28	28	28	M36 x 2	M36 x 2	M36 x 2	24.0	24.0	24.0	30.5	38.0	30.5	38.0	30.5	38.0	36.0
D8360-L35-35-35	35	35	35	M45 x 2	M45 x 2	M45 x 2	30.0	30.0	30.0	34.5	45.0	34.5	45.0	34.5	45.0	41.0
D8360-L42-42-42	42	42	42	M52 x 2	M52 x 2	M52 x 2	36.0	36.0	36.0	40.0	51.0	40.0	51.0	40.0	51.0	50.0
D8360-S06-06-06	6	6	6	M14 x 1.5	M14 x 1.5	M14 x 1.5	4.0	4.0	4.0	16.0	23.0	16.0	23.0	16.0	23.0	12.0
D8360-S08-08-08	8	8	8	M16 x 1.5	M16 x 1.5	M16x 1.5	5.0	5.0	5.0	17.0	24.0	17.0	24.0	17.0	24.0	14.0
D8360-S10-10-06	10	10	6	M18 x 1.5	M18 x 1.5	M14 x 1.5	7.0	7.0	4.0	17.5	25.0	17.5	25.0	18.0	25.0	17.0
D8360-S10-10-10	10	10	10	M18 x 1.5	M18 x 1.5	M18 x 1.5	7.0	7.0	7.0	17.5	25.0	17.5	25.0	17.5	25.0	17.0
D8360-S12-12-06	12	12	6	M20 x 1.5	M20 x 1.5	M14 x 1.5	8.0	8.0	4.0	21.5	29.0	21.5	29.0	22.0	29.0	17.0
D8360-S12-12-08	12	12	8	M20 x 1.5	M20 x 1.5	M16x 1.5	8.0	8.0	5.0	21.5	29.0	21.5	29.0	22.0	29.0	17.0
D8360-S12-12-10	12	12	10	M20 x 1.5	M20 x 1.5	M18 x 1.5	8.0	8.0	7.0	21.5	29.0	21.5	29.0	21.5	29.0	17.0
D8360-S12-12-12	12	12	12	M20 x 1.5	M20 x 1.5	M20 x 1.5	8.0	8.0	8.0	21.5	29.0	21.5	29.0	21.5	29.0	17.0
D8360-S12-12-16	12	12	16	M20 x 1.5	M20 x 1.5	M24 x 1.5	8.0	8.0	12.0	23.5	31.0	23.5	31.0	24.5	33.0	24.0
D8360-S14-14-10	14	14	10	M22 x 1.5	M22 x 1.5	M18 x 1.5	10.0	10.0	7.0	21.5	30.0	21.5	30.0	20.5	28.0	19.0
D8360-S14-14-14	14	14	14	M22 x 1.5	M22 x 1.5	M22 x 1.5	10.0	10.0	10.0	21.5	30.0	21.5	30.0	21.5	30.0	19.0
D8360-S16-16-06	16	16	6	M24 x 1.5	M24 x 1.5	M14 x 1.5	12.0	12.0	4.0	24.5	33.0	24.5	33.0	24.0	31.0	24.0
D8360-S16-16-08	16	16	8	M24 x 1.5	M24 x 1.5	M16x 1.5	12.0	12.0	5.0	24.5	33.0	24.5	33.0	24.0	31.0	24.0
D8360-S16-16-10	16	16	10	M24 x 1.5	M24 x 1.5	M18 x 1.5	12.0	12.0	7.0	24.5	33.0	24.5	33.0	23.5	31.0	24.0
D8360-S16-16-12	16	16	12	M24 x 1.5	M24 x 1.5	M20 x 1.5	12.0	12.0	8.0	24.5	33.0	24.5	33.0	23.5	31.0	24.0
D8360-S16-16-16	16	16	16	M24 x 1.5	M24 x 1.5	M24 x 1.5	12.0	12.0	12.0	24.5	33.0	24.5	33.0	24.5	33.0	24.0
D8360-S16-16-20	16	16	20	M24 x 1.5	M24 x 1.5	M30 x 2	12.0	12.0	16.0	27.5	36.0	27.5	36.0	26.5	37.0	27.0
D8360-S20-20-10	20	20	10	M30x2	M30 x 2	M18 x 1.5	16.0	16.0	7.0	26.5	37.0	26.5	37.0	26.5	34.0	27.0
D8360-S20-20-12	20	20	12	M30 x 2	M30 x 2	M20 x 1.5	16.0	16.0	8.0	26.5	37.0	26.5	37.0	26.5	34.0	27.0
D8360-S20-20-16	20	20	16	M30 x 2	M30 x 2	M24 x 1.5	16.0	16.0	12.0	26.5	37.0	26.5	37.0	27.5	36.0	27.0
D8360-S20-20-20	20	20	20	M30 x 2	M30 x 2	M30 x 2	16.0	16.0	16.0	26.5	37.0	26.5	37.0	26.5	37.0	27.0
D8360-S20-20-25	20	20	25	M30 x 2	M30 x 2	M36 x 2	16.0	16.0	20.0	29.5	40.0	29.5	40.0	30.0	42.0	36.0
D8360-S25-25-25	25	25	25	M36 x 2	M36 x 2	M36 x 2	20.0	20.0	20.0	30.0	42.0	30.0	42.0	30.0	42.0	36.0
D8360-S30-30-30	30	30	30	M42 x 2	M42 x 2	M42 x 2	25.0	25.0	25.0	35.5	49.0	35.5	49.0	35.5	49.0	41.0
D8360-S38-38-38	38	38	38	M52 x 2	M52 x 2	M52 x 2	32.0	32.0	32.0	41.0	57.0	41.0	57.0	41.0	57.0	50.0

Metric Bite Type Fittings

Tee Coupling
D8360-NBR Series

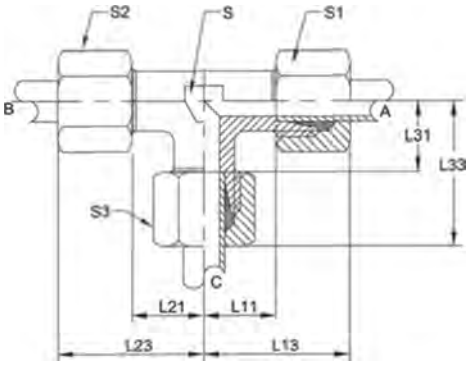

PART NO. SIZE	A TUBE ao	B TUBE ao	C TUBE an	EA TUB	B mo	C mo	A DRILL	B DRILL	C DRILL	HI Lem	L13 LOTH	121 LEIX	123 icm	131 LGTH	133 LGTH	S FLATS	SI HEX	S2 HEX	S3 HEX
D8360£04040M>JBR	4	4	4	M8x1	M8x1	M8x1	30	30	30	11.0	205	110	205	11.0	205	90	100	100	100
D836&E060606JMBR	6	6	6	MIOxI	MIOxI	MIOxI	45	45	45	95	210	95	210	95	210	ao	120	120	120
D8360£060808NBR	8	8	8	M12x1	M12x1	M12x1	&0	60	60	115	230	115	280	115	230	120	14.0	14.0	140
D8360-L060606NBR	6	6	6	M12x15	M12x15	M12x15	4.0	40	4.0	120	265	120	265	120	265	120	140	140	140
D8360L080808NBR	8	8	8	M14x15	M14x15	M14x15	60	60	60	14.0	285	140	285	140	285	120	170	17.0	17.0
D8366LKM0-1ONBR	10	10	10	M16x15	M16x15	M16x15	80	80	80	150	295	150	295	160	295	14.0	190	19.0	190
D8360-L12-12-12-NBR	12	12	12	M18x15	M18x15	M18x15	100	100	10.0	17.0	315	170	315	17.0	315	170	220	220	220
D8360L12-12-1&NBR	12	12	18	M18x15	M18x15	M26x15	10.0	100	150	230	375	280	375	235	395	24.0	220	220	320
D8360L15-15-12-NBR	15	15	12	M22x15	M22x15	M18x15	120	120	10.0	21.0	360	210	360	200	345	19.0	270	270	220
D8360L15-15-15NBR	15	15	15	M22x15	M22x15	M22x1S	120	120	120	21.0	360	210	360	21.0	360	19.0	27.0	270	27.0
D8360L15-15-1&NBR	15	15	18	M22x15	M22x15	M26x15	120	120	150	24.0	39.0	240	390	235	395	24.0	270	270	320
D836OL18-1806MBR	18	18	8	M26x15	M26x15	M14x15	150	150	60	235	395	235	395	220	365	240	320	320	170
D8360-L18-181CLNBR	18	18	10	M26x15	M26x15	M16x15	150	150	80	235	395	235	395	280	375	240	320	320	190
D8360L18-18-12-NBR	18	18	12	M26x15	M26x15	M18x1.5	150	150	10.0	235	395	235	395	280	375	240	32.0	320	220
D8360L18-1815NBR	18	18	15	M26x15	M26x15	M22x1.5	150	150	120	235	395	235	395	240	390	24.0	320	320	27.0
D8360L18181&NBR	18	18	18	M26x15	M26x15	M26x1.5	150	150	150	235	395	235	395	235	395	24.0	320	320	320
D8360L22-22-1ONBR	22	22	10	M30x2	M30x2	M16x1.5	190	19.0	80	275	435	275	435	260	405	27.0	360	360	190
D8360L22-22-12-NBR	22	22	12	M30x2	M30x2	M18x1.5	190	190	100	275	435	275	435	260	405	270	360	360	220
D8360-L22-22-1&NBR	22	22	15	M30x2	M30x2	M22x1.5	19.0	190	120	275	435	275	435	27.0	420	27.0	360	360	270
D8366L22-22-1&NBR	22	22	18	M30x2	M30x2	M26x1.5	19.0	19.0	150	275	435	275	435	265	425	270	360	360	320
D8360-L22-22-22-NEBR	22	22	22	M30x2	M30x2	M30x2	19.0	190	190	275	435	275	435	275	435	27.0	360	360	360
D830OL22-22-28NBR	22	22	28	M30x2	M30x2	M36x2	19.0	190	240	305	465	305	465	305	470	360	360	360	410
D8360-L28-2&2&N BR	28	28	28	M36x2	M36x2	M36x2	24.0	240	240	305	470	305	47.0	305	470	360	410	410	410
D836&L35353&NBR	35	35	35	M45x2	M45x2	M45x2	30.0	300	300	345	560	345	560	345	560	410	500	50.0	500
D836&L424242-N BR	42	42	42	M52x2	M52x2	M52x2	350	360	360	400	625	40.0	625	40.0	625	500	600	600	600
D8360-S060606NBR	6	6	6	M14x15	M14x15	M14x15	4.0	40	4.0	160	305	160	305	160	305	120	170	17.0	170
D8360S080808NBR	8	8	8	M16x15	M16x15	M16x1.5	50	50	5.0	170	315	17.0	315	17.0	315	140	19.0	190	190
D8360S1&100&NBR	10	10	6	M18x15	M18x15	M14x1.5	70	7.0	4.0	175	335	175	335	180	325	170	220	220	170
D8360S10-10-1&MBR	10	10	10	M18x15	M18x15	M18x1.5	7.0	70	7.0	175	335	175	335	175	335	170	220	220	220
D8360S12-120&NBR	12	12	6	M20x15	M20x15	M14x15	80	80	40	215	375	215	375	220	365	170	24.0	24.0	170
D8360S12-12-0&NE5R	12	12	8	M20x15	M20x15	M16x1.5	80	ao	50	215	375	215	375	220	365	170	24.0	24.0	190
D8360-S12-12-10MBR	12	12	10	M20x15	M20x15	M18x1.5	80	ao	70	215	375	215	375	215	375	170	24.0	24.0	220
D8360S12-12-12-NBR	12	12	12	M20x15	M20x15	M20x15	80	80	80	215	375	215	375	215	375	170	24.0	24.0	24.0
D8360-S12-12-1&MBR	12	12	16	M20x15	M20x15	M24x1.5	80	80	120	235	395	235	395	245	425	24.0	24.0	24.0	300
D8360S14-14-10NBR	14	14	10	M22x15	M22x15	M18x1.5	10.0	100	7.0	215	395	215	395	205	365	190	27.0	27.0	220
D8360S14-14-144VIBR	14	14	14	M22x15	M22x15	M22x15	10.0	100	10.0	215	395	215	395	215	395	190	27.0	27.0	27.0
D8360S1&160&NBR	16	16	6	M24x15	M24x15	M14x1.5	120	120	40	245	425	245	425	24.0	385	24.0	30.0	30.0	17.0
D8360S1&160&NBR	16	16	8	M24x15	M24x15	M16x15	120	120	50	245	425	245	425	24.0	385	240	300	300	19.0
D8360S161610NBR	16	16	10	M24x15	M24x15	M18x1.5	120	120	7.0	245	425	245	425	235	395	24.0	30.0	30.0	220
D8360S1&1612-NBR	16	16	12	M24x15	M24x15	M20x15	120	120	80	245	425	245	425	235	395	240	30.0	30.0	24.0
D8360S16161&NBR	16	16	16	M24x15	M24x15	M24x1.5	120	120	120	245	425	245	425	245	425	240	30.0	30.0	30.0
D8360-S16162ONBR	16	16	20	M24x15	M24x15	M30x2	120	120	160	275	455	275	455	265	480	270	30.0	30.0	360
D8360-S20-20-10MBR	20	20	10	M30x2	M30x2	M18x1.5	160	160	7.0	265	480	265	480	265	425	270	360	360	220
D836&S20-2012-NBR	20	20	12	M30x2	M30x2	M20x1.5	160	160	80	265	480	265	480	265	425	270	360	360	240
D8360S2620-1&NBR	20	20	16	M30x2	M30x2	M24x1.5	160	160	120	265	480	265	480	275	455	270	360	360	30.0
D8360-S20-20-2&NBR	20	20	20	M30x2	M30x2	M30x2	160	160	160	265	480	265	480	265	480	270	360	360	360
D8360S20202&NBR	20	20	25	M30x2	M30x2	M36x2	160	160	200	295	51.0	295	51.0	30.0	540	360	360	360	460
D8360S2525-25NBR	25	25	25	M36x2	M36x2	M36x2	200	200	200	300	54.0	300	54.0	30.0	540	360	460	460	460
D8360S30303&NBR	30	30	30	M42x2	M42x2	M42x2	250	250	250	355	620	355	620	355	620	410	50.0	50.0	50.0
D8360-S38-3838-NBR	38	38	38	M52x2	M52x2	M52x2	320	320	320	41.0	715	41.0	715	41.0	715	50.0	60.0	60.0	60.0

Male Stud Branch Tee Metric Taper Body Only
D8433 Series

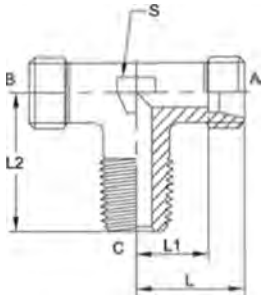

PART NO. SIZE	A TUBE O.D	B TUBE O.D	A THD	B THD	C THD	A DRILL	B DRILL	C DRILL	LI LGTH	I LGTH	L2 LGTH	S FLATS
D8433-S12-12-18	12	12	M20 x 1.5	M20 x 1.5	M18 x 1.5 keg	8.0	8.0	8.0	21.5	29.0	28.0	17.0

F-047

Male Stud Branch Tee Metric Taper
D8433-NBR Series

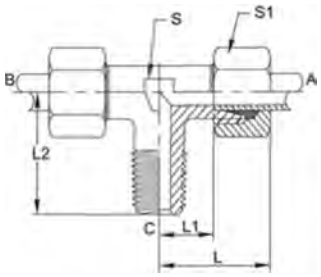

PART NO. SIZE	A TUBE 0.0	B TUBE 0.0	A THD	B THD	C THD	A DRILL	B DRILL	C DRILL	LI LGTH	L LGTH	L2 LGTH	SI HEX	S FIATS
D8433-S12-12-18-NBR	12	12	M20x 1.5	M20 x 1.5	M18 x 1.5 keg	8.0	8.0	8.0	21.5	37.5	28.0	24.0	17.0

Male Stud Branch Tee BSPT Body Only
D8443 Series

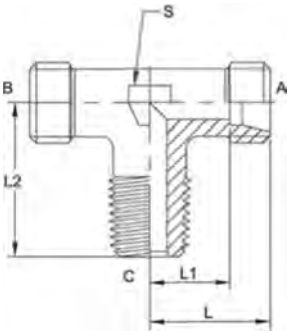

PART NO. SIZE	A TUBE 0.0	B TUBE 0.0	A THD	B THO	C BSPT	A DRILL	B DRILL	C DRILL	LI LGTH	I LGTH	L2 LGTH	S FLATS
D8443-L06-06-02	6	6	M12 x 1.5	M12x 1.5	R 1/8	4.0	4.0	4.0	12.0	19.0	20.0	12.0
D8443-L10-10-04	10	10	M16x 1.5	M16 x 1.5	R 1/4	8.0	8.0	7.0	15.0	22.0	27.0	14.0
D8443-L12-12-06	12	12	M18 x 1.5	M18 x 1.5	R 3/8	10.0	10.0	9.0	17.0	24.0	28.0	17.0
D8443-S12-12-06	12	12	M20 x 1.5	M20x 1.5	R 3/8	8.0	8.0	8.0	21.5	29.0	28.0	17.0

Metric Bite Type Fittings

Male Stud Branch Tee BSPT
D8443-NBR Series

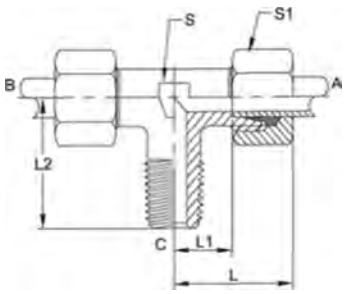

PART NO. SIZE	A TUBE 0.0	B TUBE 0.0	A THD	B THD	C BSPT	A DRILL	B DRILL	C DRILL	LI LETH	L LETH	12 LETH	S FLATS	SI HEX
D8443-L06-06-02-N BR	6	6	M12 x 1.5	M12 x 1.5	R 1/8	4	4	4	12	26.5	20	12	14
D8443-L10-10-04-NBR	10	10	M16 x 1.5	M16 x 1.5	R 1/4	8	8	7	15	29.5	27	14	19
D8443-L12-12-06-N BR	12	12	M18 x 1.5	M18 x 1.5	R 3/8	10	10	9	17	31.5	28	17	22
D8443-S12-12-06-NBR	12	12	M20x 1.5	M20 x 1.5	R 3/8	8	8	8	21.5	37.5	28	17	24

Adjustable Branch Tee with Tube Connection Body Only
D8463 Series

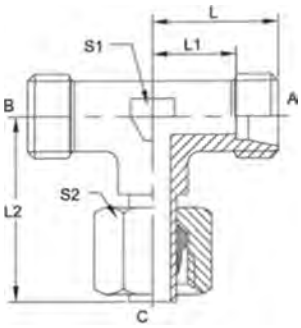

PART NO. SIZE	A/B TUBE 0.0	C TUBE 0.0	A/B THD	C THD	A/B DRILL	C DRILL	LI LETH	I LETH	12 LETH	SI FLATS	S2 HEX
D8463-L06-06-06	6	6	M12 x 1.5	M12 x 1.5	4.0	3.5	12.0	19.0	26.0	12.0	14.0
D8463-L08-08-08	8	8	M14 x 1.5	M14 x 1.5	6.0	4.5	14.0	21.0	27.5	12.0	17.0
D8463-L10-10-10	10	10	M16 x 1.5	M16 x 1.5	8.0	7.0	15.0	22.0	29.0	14.0	19.0
D8463-L12-12-12	12	12	M18 x 1.5	M18 x 1.5	10.0	7.5	17.0	24.0	29.5	17.0	22.0
D8463-L15-15-15	15	15	M22 x 1.5	M22 x 1.5	12.0	11.0	21.0	28.0	32.5	19.0	27.0
D8463-L18-18-18	18	18	M26 x 1.5	M26 x 1.5	15.0	14.0	23.5	31.0	35.5	24.0	32.0
D8463-L22-22-22	22	22	M30 x 2	M30 x 2	19.0	18.0	27.5	35.0	38.5	27.0	36.0
D8463-L28-28-28	28	28	M36 x 2	M36 x 2	24.0	23.0	30.5	38.0	41.5	36.0	41.0
D8463-L35-35-35	35	35	M45 x 2	M45 x 2	30.0	29.5	34.5	45.0	51.0	41.0	50.0
D8463-L42-42-42	42	42	M52 x 2	M52 x 2	36.0	35.5	40.0	51.0	56.0	50.0	60.0
D8463-S06-06-06	6	6	M14 x 1.5	M14 x 1.5	4.0	3.5	16.0	23.0	27.0	12.0	17.0
D8463-S08-08-08	8	8	M16 x 1.5	M16 x 1.5	5.0	4.5	17.0	24.0	27.5	14.0	19.0
D8463-S10-10-10	10	10	M18 x 1.5	M18 x 1.5	7.0	7.0	17.5	25.0	30.0	17.0	22.0
D8463-S12-12-12	12	12	17120 x 1.5	M20 x 1.5	8.0	6.5	21.5	29.0	31.0	17.0	24.0
D8463-S14-14-14	14	14	17122 x 1.5	M22x1.5	10.0	9.5	21.5	30.0	33.5	19.0	27.0
D8463-S16-16-16	16	16	(7124 x 1.5	17124x1.5	12.0	11.5	24.5	33.0	36.5	24.0	30.0
D8463-S20-20-20	20	20	M30 x 2	17130x2	16.0	15.5	26.5	37.0	44.5	27.0	36.0
D8463-S25-25-25	25	25	17136 x 2	17136x2	20.0	18.0	30.0	42.0	50.0	36.0	46.0
D8463-S30-30-30	30	30	17142 x 2	17142x2	25.0	23.0	35.5	49.0	55.0	41.0	50.0
D8463-S38-38-38	38	38	M52 x 2	17152x2	32.0	29.0	41.0	57.0	63.0	50.0	60.0

Adjustable Branch Tee with Tube Connection
D8463-NBR Series

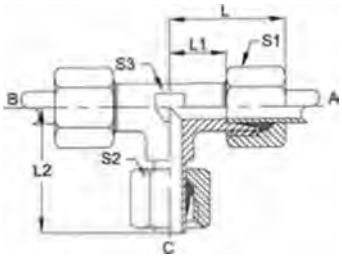

PART NO. SIZE	A/B TUBE O.D	C TUBE O.D	A/B THO	C THO	A/B DRILL	C DRILL	LI LBTH	I LGTH	L2 LGTH	S3 FLATS	SI HEX	S2 HEX
D8463-L06-06-06-N BR	6	6	M12 x 1.5	M12 x 1.5	4.0	3.5	12.0	26.5	26.0	12.0	14.0	14.0
D8463-L08-08-08-N BR	8	8	M14 x 1.5	M14 x 1.5	6.0	4.5	14.0	28.5	27.5	12.0	17.0	17.0
D8463-L10-10-10-N BR	10	10	M16 x 1.5	M16 x 1.5	8.0	7.0	15.0	29.5	29.0	14.0	19.0	19.0
D8463-L12-12-12-N BR	12	12	M18 x 1.5	M18 x 1.5	10.0	7.5	17.0	31.5	29.5	17.0	22.0	22.0
D8463-L15-15-15-NBR	15	15	M22 x 1.5	M22 x 1.5	12.0	11.0	21.0	36.0	32.5	19.0	27.0	27.0
D8463-L18-18-18-N BR	18	18	M26 x 1.5	M26 x 1.5	15.0	14.0	23.5	39.5	35.5	24.0	32.0	32.0
D8463-L22-22-22-N BR	22	22	M30 x 2	M30 x 2	19.0	18.0	27.5	43.5	38.5	27.0	36.0	36.0
D8463-L28-28-28-N BR	28	28	M36 x 2	M36 x 2	24.0	23.0	30.5	47.0	41.5	36.0	41.0	41.0
D8463-L35-35-35-N BR	35	35	M45 x 2	M45 x 2	30.0	29.5	34.5	56.0	51.0	41.0	50.0	50.0
D8463-L42-42-42-NBR	42	42	M52 x 2	M52 x 2	36.0	35.5	40.0	62.5	56.0	50.0	60.0	60.0
D8463-S06-06-06-NBR	6	6	M14 x 1.5	M14 x 1.5	4.0	3.5	16.0	30.5	27.0	12.0	17.0	17.0
D8463-S08-08-08-N BR	8	8	M16 x 1.5	M16 x 1.5	5.0	4.5	17.0	31.5	27.5	14.0	19.0	19.0
D8463-S10-10-10-NBR	10	10	M18 x 1.5	M18 x 1.5	7.0	7.0	17.5	33.5	30.0	17.0	22.0	22.0
D8463-S12-12-12-N BR	12	12	M20 x 1.5	M20 x 1.5	8.0	6.5	21.5	37.5	31.0	17.0	24.0	24.0
D8463-S14-14-14-N BR	14	14	M22 x 1.5	M22 x 1.5	10.0	9.5	21.5	39.5	33.5	19.0	27.0	27.0
D8463-S16-16-16-NBR	16	16	M24 x 1.5	M24 x 1.5	12.0	11.5	24.5	42.5	36.5	24.0	30.0	30.0
D8463-S20-20-20-NBR	20	20	M30 x 2	M30 x 2	16.0	15.5	26.5	48.0	44.5	27.0	36.0	36.0
D8463-S25-25-25-N BR	25	25	M36x2	M36 x 2	20.0	18.0	30.0	54.0	50.0	36.0	46.0	46.0
D8463-S30-30-30-NBR	30	30	M42 x 2	M42 x 2	25.0	23.0	35.5	62.0	55.0	41.0	50.0	50.0
D8463-S38-38-38-NBR	38	38	M52 x 2	M52 x 2	32.0	29.0	41.0	71.5	63.0	50.0	60.0	60.0

Adjustable Branch Tee Body with O-ring
D8469 Series

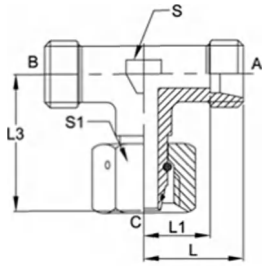

PART NO. SIZE	A TUBE 0.0	B TUBE 0.0	C TUBE 0.0	A THD	B THD	C THO	A DRILL	B DRILL	C DRILL	LI LGTH	I LGTH	U LGTH	S FLATS	SI HEX
D8469-L06-06-06	6	6	6	M12 x 1.5	M12x 1.5	M12 x 1.5	4.0	4.0	2.5	12.0	19.0	27.0	12.0	14.0
D8469-L08-08-08	8	8	8	M14x 1.5	M14x 1.5	M14 x 1.5	6.0	6.0	4.0	14.0	21.0	27.5	12.0	17.0
D8469-L10-10-10	10	10	10	M16 x 1.5	M16 x 1.5	M16x 1.5	8.0	8.0	6.0	15.0	22.0	30.0	14.0	19.0
D8469-L12-12-12	12	12	12	M18 x 1.5	M18 x 1.5	M18 x 1.5	10.0	10.0	8.0	17.0	24.0	31.0	17.0	22.0
D8469-L12-15-15	12	15	15	M18 x 1.5	M22 x 1.5	M22 x 1.5	10.0	12.0	10.0	20.0	27.0	32.5	19.0	27.0
D8469-L18-18-18	18	18	18	M26 x 1.5	M26x 1.5	M26 x 1.5	15.0	15.0	13.0	23.5	31.0	35.5	24.0	32.0
D8469-L22-22-22	22	22	22	M30 x 2	M30 x 2	M30 x 2	19.0	19.0	17.0	27.5	35.0	38.5	27.0	36.0
D8469-L28-28-28	28	28	28	M36 x 2	M36 x 2	M36 x 2	24.0	24.0	22.0	30.5	38.0	41.5	36.0	41.0
D8469-L35-35-35	35	35	35	M45 x 2	M45 x 2	M45 x 2	30.0	30.0	28.0	34.5	45.0	51.0	41.0	50.0
D8469-L42-42-42	42	42	42	M52 x 2	M52 x 2	M52 x 2	36.0	36.0	34.0	40.0	51.0	56.0	50.0	60.0
D8469-S06-06-06	6	6	6	M14 x 1.5	M14 x 1.5	M14 x 1.5	4.0	4.0	2.5	16.0	23.0	27.0	12.0	17.0
D8469-S08-08-08	8	8	8	M16 x 1.5	M16 x 1.5	M16 x 1.5	5.0	5.0	4.0	17.0	24.0	27.5	14.0	19.0
D8469-S10-10-10	10	10	10	M18 x 1.5	M18 x 1.5	M18 x 1.5	7.0	7.0	6.0	17.5	25.0	30.0	17.0	22.0
D8469-S12-12-12	12	12	12	M20 x 1.5	M20 x 1.5	M20 x 1.5	8.0	8.0	8.0	21.5	29.0	31.0	17.0	24.0
D8469-S14-14-14	14	14	14	M22 x 1.5	M22 x 1.5	M22 x 1.5	10.0	10.0	9.0	21.5	30.0	32.5	19.0	27.0
D8469-S16-16-16	16	16	16	M24 x 1.5	M24 x 1.5	M24 x 1.5	12.0	12.0	11.0	24.5	33.0	36.5	24.0	30.0
D8469-S20-20-20	20	20	20	M30 x 2	M30 x 2	M30 x 2	16.0	16.0	14.0	26.5	37.0	44.5	27.0	36.0
D8469-S25-25-25	25	25	25	M36 x 2	M36 x 2	M36 x 2	20.0	20.0	18.0	30.0	42.0	50.0	36.0	46.0
D8469-S30-30-30	30	30	30	M42 x 2	M42 x 2	M42 x 2	25.0	25.0	23.0	35.5	49.0	55.0	41.0	50.0
D8469-S38-38-38	38	38	38	M52 x 2	M52 x 2	M52 x 2	32.0	32.0	30.0	41.0	57.0	63.0	50.0	60.0

Metric Bite Type Fittings

Adjustable Branch Tee with Tube connetion
D8469-NBR Series

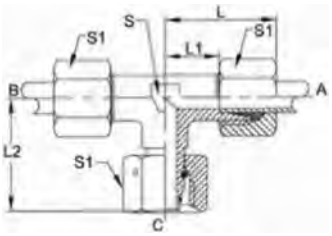

PART NO. SIZE	A TUBE O.D	B TUBE 0.0	C TUBE 0.0	A THD	B THD	C THD	A DRILL	B DRILL	C DRILL	LI LOTH	L2 LOTH	S FLATS	SI HEX
D8469-L06-06-06-N BR	6	6	6	M12 x 1.5	M12 x 1.5	M12 x 1.5	4	4	2.5	12	27	12	14
D8469-L08-08-08-N BR	8	8	8	M14 x 1.5	M14 x 1.5	M14 x 1.5	6	6	4	14	27.5	12	17
D8469-L10-10-10-N BR	10	10	10	M16 x 1.5	M16 x 1.5	M16 x 1.5	8	8	6	15	30	14	19
D8469-L12-12-12-NBR	12	12	12	M18x 1.5	M18 x 1.5	M18 x 1.5	10	10	8	17	31	17	22
D8469-L12-15-15-NBR	12	15	15	M18 x 1.5	M22 x 1.5	M22 x 1.5	10	12	10	20	32.5	19	22
D8469-L18-18-18-N BR	18	18	18	M26x 1.5	M26 x 1.5	M26 x 1.5	15	15	13	23.5	35.5	24	32
D8469-L22-22-22-NBR	22	22	22	M30 x 2	M30 x 2	M30x2	19	19	17	27.5	38.5	27	36
D8469-L28-28-28-N BR	28	28	28	M36 x 2	M36 x 2	M36 x 2	24	24	22	30.5	41.5	36	41
D8469-L35-35-35-N BR	35	35	35	M45 x 2	M45 x 2	M45 x 2	30	30	28	34.5	51	41	50
D8469-L42-42-42-N BR	42	42	42	M52 x 2	M52 x 2	M52 x 2	36	36	34	40	56	50	60
D8469-S06-06-06-N BR	6	6	6	M14 x 1.5	M14 x 1.5	M14 x 1.5	4	4	2.5	16	27	12	17
D8469-S08-08-08-N BR	8	8	8	M16x 1.5	M16 x 1.5	M16 x 1.5	5	5	4	17	27.5	14	19
D8469-S10-10-10-N BR	10	10	10	M18x 1.5	M18 x 1.5	M18x 1.5	7	7	6	17.5	30	17	22
D8469-S12-12-12-NBR	12	12	12	M20 x 1.5	M20 x 1.5	M20 x 1.5	8	8	8	21.5	31	17	24
D8469-S14-14-14-NBR	14	14	14	M22 x 1.5	M22 x 1.5	M22 x 1.5	10	10	9	21.5	32.5	19	27
D8469-S16-16-16-NBR	16	16	16	M24 x 1.5	M24 x 1.5	M24 x 1.5	12	12	11	24.5	36.5	24	30
D8469-S20-20-20-N B R	20	20	20	M30 x 2	M30 x 2	M30 x 2	16	16	14	26.5	44.5	27	36
D8469-S25-25-25-N BR	25	25	25	M36 x 2	M36 x 2	M36 x 2	20	20	18	30	50	36	46
D8469-S30-30-30-N BR	30	30	30	M42 x 2	M42 x 2	M42 x 2	25	25	23	35.5	55	41	50
D8469-S38-38-38-NBR	38	38	38	M52 x 2	M52 x 2	M52 x 2	32	32	30	41	63	50	60

F-050

Male Stud Barrel Tee BSPT Body Only
D8543 Series

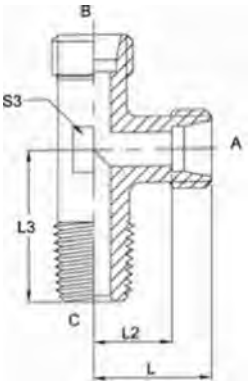

PART NO. SIZE	A TUBE 0.0	B TUBE 0.0	C TUBE 0.0	A THD	C BSPT	B THO	A DRILL	B DRILL	C DRILL	L2 LGTH	L LGTH	L3 LGTH	S3 FIATS
D8543-S12-06-12	12	12	12	M20 x 1.5	R 3/8	M20 x 1.5	8.0	8.0	8.0	21.5	29.0	28.0	17.0

Male Stud Barrel Tee BSPT
D8543-NBR Series

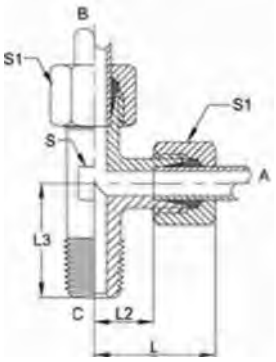

PART NO. SIZE	A TUBE 0.0	BTUBE 0.0	A THO	C BSPT	B THO	A DRILL	B DRILL	C DRILL	L2 LGTH	I LGTH	L3 LGTH	S FLAT	SI HEX
D8543-S12-06-12-N BR	12	12	M20 x 1.5	R 3/8	M20 x 1.5	8.0	8.0	8.0	21.5	37.5	28.0	17.0	24.0

F-051

Adjustable Run Tee with Tube Connection Body Only
D8563 Series

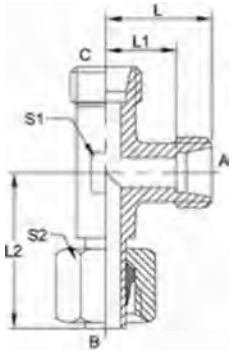

PART NO. SIZE	A/C TUBE 0.0	BTUBE 0.D	A/C THD	B THD	A/C DRILL	B DRILL	LI LGTH	I LGTH	L2 LGTH	SI FLAT	S2 HEX
D8563-L06-06-06	6	6	M12 x 1.5	M12 x 1.5	4.0	3.5	12.0	19.0	26.0	12.0	14.0
D8563-L08-08-08	8	8	M14 x 1.5	M14 x 1.5	6.0	4.5	14.0	21.0	27.5	12.0	17.0
D8563-L10-10-10	10	10	M16 x 1.5	M16 x 1.5	8.0	7.0	15.0	22.0	29.0	14.0	19.0
D8563-L12-12-12	12	12	M18 x 1.5	M18 x 1.5	10.0	7.5	17.0	24.0	29.5	17.0	22.0
D8563-L15-15-15	15	15	M22 x 1.5	M22 x 1.5	12.0	11.0	21.0	28.0	32.5	19.0	27.0
D8563-L18-18-18	18	18	M26 x 1.5	M26x 1.5	15.0	14.0	23.5	31.0	35.5	24.0	32.0
D8563-L22-22-22	22	22	M30 x 2	M30 x 2	19.0	18.0	27.5	35.0	38.5	27.0	36.0
D8563-L28-28-28	28	28	M36 x 2	M36 x 2	24.0	23.0	30.5	38.0	41.5	36.0	41.0
D8563-L35-35-35	35	35	M45 x 2	M45 x 2	30.0	29.5	34.5	45.0	51.0	41.0	50.0
D8563-L42-42-42	42	42	M52 x 2	M52 x 2	36.0	35.5	40.0	51.0	56.0	50.0	60.0
D8563-S06-06-06	6	6	M14 x 1.5	M14 x 1.5	4.0	3.5	16.0	23.0	27.0	12.0	17.0
D8563-S08-08-08	8	8	M16 x 1.5	M16 x 1.5	5.0	4.5	17.0	24.0	27.5	14.0	19.0
D8563-S10-10-10	10	10	M18 x 1.5	M18 x 1.5	7.0	7.0	17.5	25.0	30.0	17.0	22.0
D8563-S12-12-12	12	12	M20 x 1.5	M20x 1.5	8.0	6.5	21.5	29.0	31.0	17.0	24.0
D8563-S14-14-14	14	14	M22 x 1.5	M22 x 1.5	10.0	9.5	21.5	30.0	33.5	19.0	27.0
D8563-S16-16-16	16	16	M24 x 1.5	M24 x 1.5	12.0	11.5	24.5	33.0	36.5	24.0	30.0
D8563-S20-20-20	20	20	M30 x 2	M30 x 2	16.0	15.5	26.5	37.0	44.5	27.0	36.0
D8563-S25-25-25	25	25	M36 x 2	M36 x 2	20.0	18.0	30.0	42.0	50.0	36.0	46.0
D8563-S30-30-30	30	30	M42 x 2	M42 x 2	25.0	23.0	35.5	49.0	55.0	41.0	50.0
D8563-S38-38-38	38	38	M52 x 2	M52 x 2	32.0	29.0	41.0	57.0	63.0	50.0	60.0

Metric Bite Type Fittings

Adjustable Run Tee with Tube Connection
D8563-NBR Series

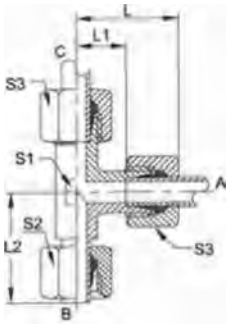

PART NO.SIZE	A/C TUBE 0.D	B TUBE 0.0	A/C THD	B THD	A/C DRILL	B DRILL	LI LGTH	L LGTH	L2 LGTH	SI FLATS	S2 HEX	S3 HEX
D8563-L06-06-06-NBR	6	6	M12 x 1.5	M12x 1.5	4.0	3.5	12.0	26.5	26.0	12.0	14.0	14.0
D8563-L08-08-08-NBR	8	8	M14x 1.5	M14x 1.5	6.0	4.5	14.0	28.5	27.5	12.0	17.0	17.0
D8563-L10-10-10-NBR	10	10	M16 x 1.5	M16x 1.5	8.0	7.0	15.0	29.5	29.0	14.0	19.0	19.0
D8563-L12-12-12-NBR	12	12	M18 x 1.5	M18 x 1.5	10.0	7.5	17.0	31.5	29.5	17.0	22.0	22.0
D8563-L15-15-15-N BR	15	15	M22 x 1.5	M22 x 1.5	12.0	11.0	21.0	36.0	32.5	19.0	27.0	27.0
D8563-L18-18-18-NBR	18	18	M26 x 1.5	M26 x 1.5	15.0	14.0	23.5	39.5	35.5	24.0	32.0	32.0
D8563-L22-22-22-N BR	22	22	M30 x 2	M30 x 2	19.0	18.0	27.5	43.5	38.5	27.0	36.0	36.0
D8563-L28-28-28-NBR	28	28	M36 x 2	M36 x 2	24.0	23.0	30.5	47.0	41.5	36.0	41.0	41.0
D8563-L35-35-35-N BR	35	35	M45 x 2	M45 x 2	30.0	29.5	34.5	56.0	51.0	41.0	50.0	50.0
D8563-L42-42-42-NBR	42	42	M52 x 2	M52 x 2	36.0	35.5	40.0	62.5	56.0	50.0	60.0	60.0
D8563-S06-06-06-N BR	6	6	M14 x 1.5	M14 x 1.5	4.0	3.5	16.0	30.5	27.0	12.0	17.0	17.0
D8563-S08-08-08-NBR	8	8	M16 x 1.5	M16 x 1.5	5.0	4.5	17.0	31.5	27.5	14.0	19.0	19.0
D8563-S10-10-10-N BR	10	10	M18 x 1.5	M18 x 1.5	7.0	7.0	17.5	33.5	30.0	17.0	22.0	22.0
D8563-S12-12-12-NBR	12	12	M20 x 1.5	M20 x 1.5	8.0	6.5	21.5	37.5	31.0	17.0	24.0	24.0
D8563-S14-14-14-N BR	14	14	M22 x 1.5	M22 x 1.5	10.0	9.5	21.5	39.5	33.5	19.0	27.0	27.0
D8563-S16-16-16-NBR	16	16	M24 x 1.5	M24x 1.5	12.0	11.5	24.5	42.5	36.5	24.0	30.0	30.0
D8563-S20-20-20-N BR	20	20	M30 x 2	M30 x 2	16.0	15.5	26.5	48.0	44.5	27.0	36.0	36.0
D8563-S25-25-25-NBR	25	25	M36 x 2	M36 x 2	20.0	18.0	30.0	54.0	50.0	36.0	46.0	46.0
D8563-S30-30-30-N BR	30	30	M42 x 2	M42 x 2	25.0	23.0	35.5	62.0	55.0	41.0	50.0	50.0
D8563-S38-38-38-NBR	38	38	M52 x 2	M52 x 2	32.0	29.0	41.0	71.5	63.0	50.0	60.0	60.0

Adjustable Barrel Tee Body with O-ring
D8569 Series

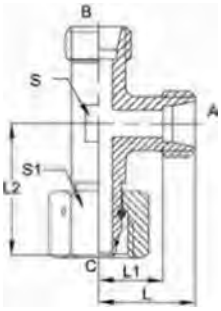

PART NO. SIZE	A TUBE 0.0	B TUBE 0.0	C TUBE 0.0	A THD	8 THD	C THD	A DRILL	C DRILL	B DBILL	11 LGTH	L LGTH	L2 LGTH	S FLAT	SI HEX
D8569-L06-06-06	6	6	6	M12 x 1.5	M12 x 1.5	M12 x 1.5	4.0	2.5	4.0	12.0	19.0	27.0	12.0	14.0
D8569-L08-08-08	8	8	8	M14 x 1.5	M14 x 1.5	M14 x 1.5	6.0	4.0	6.0	14.0	21.0	27.5	12.0	17.0
D8569-L10-10-10	10	10	10	M16 x 1.5	M16 x 1.5	M16 x 1.5	8.0	6.0	8.0	15.0	22.0	30.0	14.0	19.0
D8569-L12-12-12	12	12	12	M18 x 1.5	M18 x 1.5	M18 x 1.5	10.0	8.0	10.0	17.0	24.0	31.0	17.0	22.0
D8569-L15-15-15	15	15	15	M22 x 1.5	M22 x 1.5	M22 x 1.5	12.0	10.0	12.0	21.0	28.0	32.5	19.0	27.0
D8569-L18-18-18	18	18	18	M26x 1.5	M26 x 1.5	M26 x 1.5	15.0	13.0	15.0	23.5	31.0	35.5	24.0	32.0
D8569-L22-22-22	22	22	22	M30 x 2	M30 x 2	M30 x 2	19.0	17.0	19.0	27.5	35.0	38.5	27.0	36.0
D8569-L28-28-28	28	28	28	M36 x 2	M36 x 2	M36 x 2	24.0	22.0	24.0	30.5	38.0	41.5	36.0	41.0
D8569-L35-35-35	35	35	35	M45 x 2	M45 x 2	M45 x 2	30.0	28.0	30.0	34.5	45.0	51.0	41.0	50.0
D8569-L42-42-42	42	42	42	M52 x 2	M52 x 2	M52 x 2	36.0	34.0	36.0	40.0	51.0	56.0	50.0	60.0
D8569-S06-06-06	6	6	6	M14 x 1.5	M14 x 1.5	M14 x 1.5	4.0	2.5	4.0	16.0	23.0	27.0	12.0	17.0
D8569-S08-08-08	8	8	8	M16 x 1.5	M16 x 1.5	M16x 1.5	5.0	4.0	5.0	17.0	24.0	27.5	14.0	19.0
D8569-S10-10-10	10	10	10	M18 x 1.5	M18 x 1.5	M18 x 1.5	7.0	6.0	7.0	17.5	25.0	30.0	17.0	22.0
D8569-S12-12-12	12	12	12	M20x 1.5	M20x 1.5	M20 x 1.5	8.0	8.0	8.0	21.5	29.0	31.0	17.0	24.0
D8569-S14-14-14	14	14	14	M22 x 1.5	M22 x 1.5	M22 x 1.5	10.0	9.0	10.0	21.5	30.0	32.5	19.0	27.0
D8569-S16-16-16	16	16	16	M24x 1.5	M24x 1.5	M24 x 1.5	12.0	11.0	12.0	24.5	33.0	36.5	24.0	30.0
D8569-S20-20-20	20	20	20	M30 x 2	M30 x 2	M30 x 2	16.0	14.0	16.0	26.5	37.0	44.5	27.0	36.0
D8569-S25-25-25	25	25	25	M36 x 2	M36 x 2	M36 x 2	20.0	18.0	20.0	30.0	42.0	50.0	36.0	46.0
D8569-S30-30-30	30	30	30	M42 x 2	M42 x 2	M42 x 2	25.0	23.0	25.0	35.5	49.0	55.0	41.0	50.0
D8569-S38-38-38	38	38	38	M52 x 2	M52 x 2	M52 x 2	32.0	30.0	32.0	41.0	57.0	63.0	50.0	60.0

Metric Bite Type Fittings

Adjustable Barrel Tee with O-ring
D8569-NBR Series

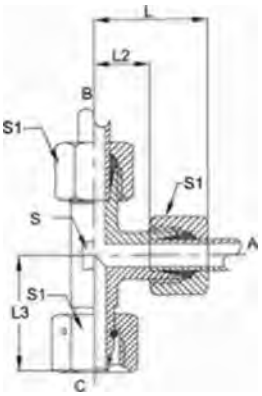

PART NO. SIZE	A TUBE O.D	B TUBE 0.0	C TUBE 0.0	A THD	B THD	C THD	A DRILL	C DRILL	B DRILL	L2 LGTH	I LGTH	13 LGTH	S FLATS	SI HEX
D8569-L06-06-06-NBR	6	6	6	M12 x 1.5	M12 x 1.5	M12x 1.5	4.0	2.5	4.0	12.0	26.5	27.0	12.0	14.0
D8569-L08-08-08-NBR	8	8	8	M14 x 1.5	M14 x 1.5	M14 x 1.5	6.0	4.0	6.0	14.0	28.5	27.5	12.0	17.0
D8569-L10-10-10-N BR	10	10	10	M16 x 1.5	M16 x 1.5	M16x 1.5	8.0	6.0	8.0	15.0	29.5	30.0	14.0	19.0
D8569-L12-12-12-N BR	12	12	12	M18 x 1.5	M18 x 1.5	M18 x 1.5	10.0	8.0	10.0	17.0	31.5	31.0	17.0	22.0
D8569-L15-15-15-N BR	15	15	15	M22 x 1.5	M22 x 1.5	M22 x 1.5	12.0	10.0	12.0	21.0	36.0	32.5	19.0	27.0
D8569-L18-18-18-N BR	18	18	18	M26 x 1.5	M26 x 1.5	M26 x 1.5	15.0	13.0	15.0	23.5	39.5	35.5	24.0	32.0
D8569-L22-22-22-NBR	22	22	22	M30 x 2	M30 x 2	M30 x 2	19.0	17.0	19.0	27.5	43.5	38.5	27.0	36.0
D8569-L28-28-28-NBR	28	28	28	M36 x 2	M36 x 2	M36 x 2	24.0	22.0	24.0	30.5	47.0	41.5	36.0	41.0
D8569-L35-35-35-NBR	35	35	35	M45 x 2	M45 x 2	M45 x 2	30.0	28.0	30.0	34.5	56.0	51.0	41.0	50.0
D8569-L42-42-42-NBR	42	42	42	M52 x 2	M52 x 2	M52 x 2	36.0	34.0	36.0	40.0	62.5	56.0	50.0	60.0
D8569-S06-06-06-N B R	6	6	6	M14 x 1.5	M14 x 1.5	M14x 1.5	4.0	2.5	4.0	16.0	30.5	27.0	12.0	17.0
D8569-S08-08-08-NBR	8	8	8	M16 x 1.5	M16 x 1.5	M16x 1.5	5.0	4.0	5.0	17.0	31.5	27.5	14.0	19.0
D8569-S10-10-10-N BR	10	10	10	M18 x 1.5	M18 x 1.5	M18 x 1.5	7.0	6.0	7.0	17.5	33.5	30.0	17.0	22.0
D8569-S12-12-12-N BR	12	12	12	M20x 1.5	M20 x 1.5	M20 x 1.5	8.0	8.0	8.0	21.5	37.5	31.0	17.0	24.0
D8569-S14-14-14-N BR	14	14	14	M22 x 1.5	M22 x 1.5	M22 x 1.5	10.0	9.0	10.0	21.5	39.5	32.5	19.0	27.0
D8569-S16-16-16-N BR	16	16	16	M24 x 1.5	M24 x 1.5	M24x 1.5	12.0	11.0	12.0	24.5	42.5	36.5	24.0	30.0
D8569-S20-20-20-N BR	20	20	20	M30 x 2	M30 x 2	M30 x 2	16.0	14.0	16.0	26.5	48.0	44.5	27.0	36.0
D8569-S25-25-25-N BR	25	25	25	M36 x 2	M36 x 2	M36 x 2	20.0	18.0	20.0	30.0	54.0	50.0	36.0	46.0
D8569-S30-30-30-N BR	30	30	30	M42 x 2	M42 x 2	M42 x 2	25.0	23.0	25.0	35.5	62.0	55.0	41.0	50.0
D8569-S38-38-38-NBR	38	38	38	M52 x 2	M52 x 2	M52 x 2	32.0	30.0	32.0	41.0	71.5	63.0	50.0	60.0

Cross Coupling Body Only
D8660 Series

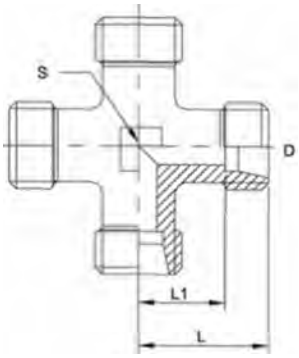

PART NO. SIZE	TUBE 0.0	0 THD	0 DRILL	LI LOTH	L LOTH	S FLATS
D8660- L06-06-06-06	6	M12 x 1.5	4.0	12.0	19.0	12.0
D8660-L10-10-10-10	10	M16 x 1.5	8.0	15.0	22.0	14.0
D8660-L12-12-12-12	12	M18 x 1.5	10.0	17.0	24.0	17.0
D8660-L15-15-15-15	15	M22x 1.5	12.0	21.0	28.0	19.0
D8660-L18-18-18-18	18	M26x 1.5	15.0	23.5	31.0	24.0
D8660-L22-22-22-22	22	M30 x 2	19.0	27.5	35.0	27.0
D8660-S06-06-06-06	6	M14x 1.5	4.0	16.0	23.0	12.0
D8660-S08-08-08-08	8	M16 x 1.5	5.0	17.0	24.0	14.0
D8660-S10-10-10-10	10	M18 x 1.5	7.0	17.5	25.0	17.0
D8660-S12-12-12-12	12	M20 x 1.5	8.0	21.5	29.0	17.0
D8660-S14-14-14-14	14	M22 x 1.5	10.0	21.5	30.0	19.0
D8660-S25-25-25-25	25	M36 x 2	20.0	30.0	42.0	36.0
D8660-S30-30-30-30	30	M42 x 2	25.0	35.5	49.0	41.0

Cross Coupling
D8660-NBR Series

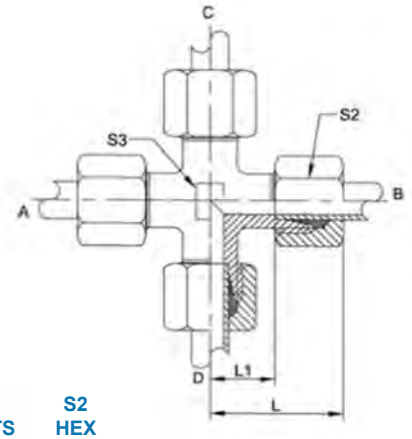

PART NO. SIZE	TUBE 0.0	A THD	A DRILL	11 LEITH	I LOTH	S3 FLATS	S2 HEX
D8660-L06-06-06-06-NBR	6	M12 x 1.5	4.0	12.0	26.5	12.0	14.0
D8660-L10-10-10-10-NBR	10	M16 x 1.5	8.0	15.0	29.5	14.0	19.0
D8660-L12-12-12-12-N BR	12	M18 x 1.5	10.0	17.0	31.5	17.0	22.0
D8660-L15-15-15-15-NBR	15	M22x 1.5	12.0	21.0	36.0	19.0	27.0
D8660-L18-18-18-18-NBR	18	M26 x 1.5	15.0	23.5	39.5	24.0	32.0
D8660-L22-22-22-22-NBR	22	M30 x 2	19.0	27.5	43.5	27.0	36.0
D8660-S06-06-06-06-NBR	6	M14 x 1.5	4.0	16.0	30.5	12.0	17.0
D8660-S08-08-08-08- N BR	8	M16 x 1.5	5.0	17.0	31.5	14.0	19.0
D8660-S10-10-10-10-N BR	10	M18 x 1.5	7.0	17.5	33.5	17.0	22.0
D8660-S12-12-12-12-N BR	12	M20x 1.5	8.0	21.5	37.5	17.0	24.0
D8660-S14-14-14-14-NBR	14	M22 x 1.5	10.0	21.5	39.5	19.0	27.0
D8660-S25-25-25-25-NBR	25	M36 x 2	20.0	30.0	54.0	36.0	46.0
D8660-S30-30-30-30-N BR	30	M42 x 2	25.0	35.5	62.0	41.0	50.0

International Fittings

International Fittings

Brennan industries, Inc/s steel and stainless steel international fittings are designed for the hydraulic systems using threads that are the standard throughout the world. These include British (BSPP, BSPT), Japanese, (JIS, Komatsu) and German (DIN) thread. Brennan currently offers these fittings in a wide range of sizes and configurations.

G-003 **7000** MJ-MBSPT	G-003 **7001** MJ-MMORR	G-004 **7002** MJ-MBSPP	G-005 **7003** MJ-FBSPP	G-005 **7004** MJ-FBSPPS	G-006 **7005** MJ-MM Port Metric
G-007 **7005-L** MJ-MM Light Metric (Dual Purpose)	G-007 **7005-S** MJ-MM Heavy Metric (Dual Purpose)	G-008 **7007-L** MJ-FMS Light Metric	G-008 **7007-S** MJ-FMS Heavy Metric	G-009 **7008** MJ-MJIS Union	G-009 **7008-F** MJ-FJIS
G-010 **7009** Komatsu MJ-MK Union	G-010 **7009-F** Komatsu MJ-FK	G-011 **7022** FJS-MBSPP	G-011 **7023** FJS-FBSPP	G-012 **7025** FJS-MM Metric	G-012 **7030** MP-MBSPT Nipple
G-013 **7032** MP-MBSPP Nipple	G-014 **7033** MP-FBSPP	G-014 **7034** MP-FBSPPS	G-015 **7040** FNPT-MBSPT	G-015 **7042** FP-MBSPP	G-016 **7045** FP-MM Metric
G-017 **7062** MORB-MBSPP	G-018 **7100** MJ-MBSPT 45° Elbow	G-018 **7102** MJ-MBSPPSADJ 45° Elbow	G-019 **7200** MJ-MBSPT 90° Elbow	G-019 **7202-NWO** MJ-MBSPPSADJ 90° Elbow	G-020 **7204** MJ-FBSPPS 90° Elbow
G-020 **7205-NWO** MJ-MMADJ 90° Elbow	G-021 **7220** FJS-MBSPT 90° Elbow	G-021 **7222** FJS-MBSPP 90° Elbow	G-022 **7588-P** MJIS Plug	G-022 **7599-P** Komatsu MK Plug	G-023 **7688-C** FJIS Cap

International Fittings

G-023 **7699-C** Komatsu FK Cap	G-024 **8055** Metric MM-MM Nipple	G-024 **8080** MJIS-MBSPT Union	G-025 **8088** MJIS-MJIS Union	G-025 **8180** MJIS-MBSPT 45° Elbow	G-025 **8280** MJIS-MBSPT 90° Elbow
G-026 **8555-H** Metric MM Hollow Hex Plug	G-026 **8555-P** Metric MM Plug 1.5 Pitch	G-027 **8800** Metric Bonded Seal	G-027 **9000** MBSPT-MBSPT Nipple	G-028 **9001** MBSPT-FBSPT Bushing	G-028 **9002** MBSPT-FBSPT 90° Elbow
G-029 **9020** MBSPP-MBSPT Straight	G-029 **9022** MBSPP-MBSPP Nipple	G-030 **9023** MBSPP-FBSPP	G-030 **9024** MBSPP-FBSPPS	G-031 **9025** Metric MBSPP-MM Nipple	G-031 **9033** FBSPP-FBSPP Coupling
G-032 **9124** MBSPP-FBSPPS Swept 45°	G-032 **9222** MBSPP-MBSPP 90°	G-033 **9224** MBSPP-FBSPPS 90°	G-033 **9224-L** MBSPP-FBSPPS 90° Long	G-034 **9322** MBSPP-MBSPP-MBSPP Tee	G-034 **9344** FBSPP-FBSPP-FBSPP Tee
G-035 **9500-P** MBSPT Plug	G-035 **9522-H** MBSPP Hollow Hex Plug	G-036 **9522-P** MBSPP Hex Plug	G-036 **9644-C** FBSPP Cap	G-037 **9722-LN** MBSPP-MBSPP Bulkhead	G-037 **9900** British Bonded Seal
G-037 **9925** BSPP Locknut					

MJ-MBSPT
7000 Series

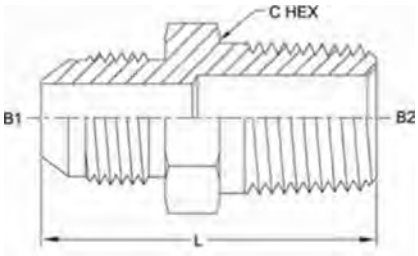

PART NO.SIZE	TUBE O.D	B1 JIC	B2 BSPT	B1 DRILL	B2 DRILL	L LGTH	C HEX
7000-04-02	1/4	7/16-20	1/8-28	4.4	4.8	31.0	12.0
7000-04-04	1/4	7/16-20	1/4-19	4.4	7.0	35.1	14.0
7000-04-06	1/4	7/16-20	3/8-19	4.4	10.3	35.1	19.0
7000-05-02	5/16	1/2-20	1/8-28	6.0	4.8	31.0	14.0
7000-05-04	5/16	1/2-20	1/4-19	6.0	7.0	35.5	14.0
7000-06-02	3/8	9/16-18	1/8-28	7.5	4.8	31.9	17.0
7000-06-04	3/8	9/16-18	1/4-19	7.5	7.0	36.4	17.0
7000-06-06	3/8	9/16-18	3/8-19	7.5	10.3	35.2	19.0
7000-06-08	3/8	9/16-18	1/2-14	7.5	13.5	41.5	22.0
7000-08-04	1/2	3/4-16	1/4-19	9.9	7.0	39.1	19.0
7000-08-06	1/2	3/4-16	3/8-19	9.9	10.3	39.1	19.0
7000-08-08	1/2	3/4-16	1/2-14	9.9	13.5	44.1	22.0
7000-08-12	1/2	3/4-16	3/4-14	9.9	18.0	45.9	27.0
7000-10-06	5/8	7/8-14	3/8-19	12.3	10.3	43.2	24.0
7000-10-08	5/8	7/8-14	1/2-14	12.3	13.5	48.0	24.0
7000-10-12	5/8	7/8-14	3/4-14	12.3	18.0	48.5	27.0
7000-12-08	3/4	1-1/16-12	1/2-14	15.5	13.5	52.5	27.0
7000-12-12	3/4	1-1/16-12	3/4-14	15.5	18.0	52.5	27.0
7000-12-16	3/4	1-1/16-12	1-11	15.5	23.8	56.0	36.0
7000-16-12	1	1-5/16-12	3/4-14	21.5	18.0	53.6	36.0
7000-16-16	1	1-5/16-12	1-11	21.5	23.8	58.5	36.0
7000-20-16	1-1/4	1-5/8-12	1-11	27.5	23.8	61.8	46.0
7000-20-20	1-1/4	1-5/8-12	1-1/4-11	27.5	31.7	62.5	46.0
7000-24-24	1-1/2	1-7/8-12	1-1/2-11	33.0	38.0	68.2	50.0
7000-32-32	2	2-1/2-12	2-11	45.0	49.0	79.2	65.0

MJ-MMORR
7001 Series

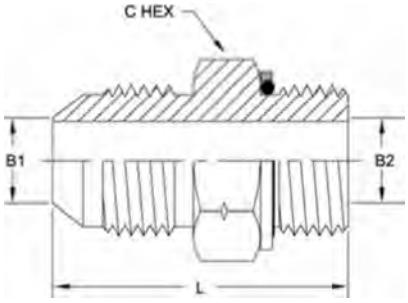

PART NO.SIZE	TUBE O.D	B1 JIC	B2 THREAD	B1 DRILL	B2 DRILL	L LGTH	C HEX
7001-04-08	1/4	7/16-20	M8 x 1	4.4	3.0	27.5	16.0
7001-04-10	1/4	7/16-20	M10 x 1	4.4	4.5	27.5	16.0
7001-04-12	1/4	7/16-20	M12 x 1.5	4.4	6.0	33.0	19.0
7001-04-14	1/4	7/16-20	M14 x 1.5	4.4	7.5	33.0	19.0
7001-05-12	5/16	1/2-20	M12 x 1.5	6.0	6.0	33.0	19.0
7001-06-14	3/8	9/16-18	M14 x 1.5	7.5	7.5	33.1	19.0
7001-06-16	3/8	9/16-18	M16 x 1.5	7.5	9.0	34.6	22.0
7001-08-16	1/2	3/4-16	M16 x 1.5	9.9	9.0	37.2	22.0
7001-08-18	1/2	3/4-16	M18 x 1.5	9.9	11.0	37.2	24.0
7001-08-22	1/2	3/4-16	M22 x 1.5	9.9	14.0	40.7	27.0
7001-10-18	5/8	7/8-14	M18 x 1.5	12.3	11.0	39.8	24.0
7001-10-20	5/8	7/8-14	M20 x 1.5	12.3	12.5	40.3	27.0
7001-10-22	5/8	7/8-14	M22 x 1.5	12.3	14.0	43.3	27.0
7001-12-22	3/4	1-1/16-12	M22 x 1.5	15.5	14.0	45.9	27.0
7001-12-27	3/4	1-1/16-12	M27 x 2	15.5	18.0	47.9	32.0
7001-16-33	1	1-5/16-12	M33 x 2	21.5	23.0	52.1	41.0
7001-20-42	1-1/4	1-5/8-12	M42 x 2	27.5	30.0	56.3	50.0
7001-24-48	1-1/2	1-7/8-12	M48 x 2	33.0	36.0	63.5	55.0

International Fittings

MJ-MBSPP
7002 Series

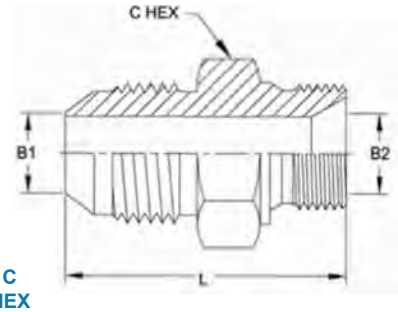

PART ND.SIZE	TUBE O.D	B1 JIC	B2 BSPP	B1 DRILL	B2 DRILL	L LGTH	C HEX
7002-04-02	1/4	7/16-20	1/8-28	4.4	3.5	27.0	14.0
7002-04-04	1/4	7/16-20	1/4-19	4.4	6.3	32.0	19.0
7002-04-06	1/4	7/16-20	3/8-19	4.4	7.9	34.0	22.0
7002-04-08	1/4	7/16-20	1/2-14	4.4	11.1	38.0	27.0
7002-04-12	1/4	7/16-20	3/4-14	4.4	16.7	42.0	32.0
7002-05-02	5/16	1/2-20	1/8-28	6.0	3.5	28.8	14.0
7002-05-04	5/16	1/2-20	1/4-19	6.0	6.3	32.0	19.0
7002-05-06	5/16	1/2-20	3/8-19	6.0	7.9	34.0	22.0
7002-05-08	5/16	1/2-20	1/2-14	6.0	11.1	38.0	27.0
7002-05-12	5/16	1/2-20	3/4-14	6.0	16.7	42.0	32.0
7002-06-02	3/8	9/16-18	1/8-28	7.5	3.5	29.7	17.0
7002-06-04	3/8	9/16-18	1/4-19	7.5	4.7	32.1	19.0
7002-06-06	3/8	9/16-18	3/8-19	7.5	7.9	34.1	22.0
7002-06-08	3/8	9/16-18	1/2-14	7.5	11.1	38.1	27.0
7002-06-10	3/8	9/16-18	5/8-14	7.5	14.3	42.1	30.0
7002-06-12	3/8	9/16-18	3/4-14	7.5	16.7	42.1	32.0
7002-08-04	1/2	3/4-16	1/4-19	9.9	4.7	35.4	19.0
7002-08-06	1/2	3/4-16	3/8-19	9.9	7.9	36.7	22.0
7002-08-08	1/2	3/4-16	1/2-14	9.9	11.1	40.7	27.0
7002-08-10	1/2	3/4-16	5/8-14	9.9	14.3	44.7	30.0
7002-08-12	1/2	3/4-16	3/4-14	9.9	16.7	44.7	32.0
7002-08-16	1/2	3/4-16	1-11	9.9	22.2	50.7	41.0
7002-10-04	5/8	7/8-14	1/4-19	12.3	4.7	39.5	24.0
7002-10-06	5/8	7/8-14	3/8-19	12.3	7.9	40.5	24.0
7002-10-08	5/8	7/8-14	1/2-14	12.3	11.1	43.3	27.0
7002-10-10	5/8	7/8-14	5/8-14	12.3	14.3	47.3	30.0
7002-10-12	5/8	7/8-14	3/4-14	12.3	16.7	47.3	32.0
7002-10-16	5/8	7/8-14	1-11	12.3	22.2	53.3	41.0
7002-12-06	3/4	1-1/16-12	3/8-19	15.5	7.9	45.0	27.0
7002-12-08	3/4	1-1/16-12	1/2-14	15.5	11.1	47.0	27.0
7002-12-10	3/4	1-1/16-12	5/8-14	15.5	14.3	49.9	30.0
7002-12-12	3/4	1-1/16-12	3/4-14	15.5	16.7	49.9	32.0
7002-12-16	3/4	1-1/16-12	1-11	15.5	22.2	55.9	41.0
7002-12-20	3/4	1-1/16-12	1-1/4-11	15.5	28.6	60.9	50.0
7002-14-12	7/8	1-3/16-12	3/4-14	18.3	16.7	49.5	32.0
7002-14-16	7/8	1-3/16-12	1-11	18.3	22.2	56.6	41.0
7002-16-08	1	1-5/16-12	1/2-14	21.5	11.1	48.1	36.0
7002-16-12	1	1-5/16-12	3/4-14	21.5	16.7	50.1	36.0
7002-16-16	1	1-5/16-12	1-11	21.5	22.2	57.1	41.0
7002-16-20	1	1-5/16-12	1-1/4-11	21.5	28.6	62.1	50.0
7002-16-24	1	1-5/16-12	1-1/2-11	21.5	33.3	68.1	55.0
7002-20-12	1-1/4	1-5/8-12	3/4-14	27.5	16.7	53.4	46.0
7002-20-16	1-1/4	1-5/8-12	1-11	27.5	22.2	56.4	46.0
7002-20-20	1-1/4	1-5/8-12	1-1/4-11	27.5	28.6	63.3	50.0
7002-20-24	1-1/4	1-5/8-12	1-1/2-11	27.5	33.3	69.3	55.0
7002-24-16	1-1/2	1-7/8-12	1-11	33.0	22.2	61.3	50.0
7002-24-20	1-1/2	1-7/8-12	1-1/4-11	33.0	28.6	62.3	50.0
7002-24-24	1-1/2	1-7/8-12	1-1/2-11	33.0	33.3	72.5	55.0
7002-24-32	1-1/2	1-7/8-12	2-11	33.0	46.0	81.5	70.0
7002-32-16	2	2-1/2-12	1-11	45.0	22.2	71.5	65.0
7002-32-20	2	2-1/2-12	1-1/4-11	45.0	28.6	72.5	65.0
7002-32-24	2	2-1/2-12	1-1/2-11	45.0	33.3	74.5	65.0
7002-32-32	2	2-1/2-12	2-11	45.0	46.0	87.9	70.0

ADD -BS AS SUFFIX TO ORDER WITH BONDED SEAL
ORDER PART NUBER 7012 FOR RETAINING RING STYLE

MJ-FBSPP
7003 Series

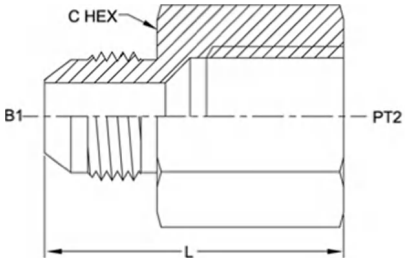

PART NO.SIZE	TUBE O.D	B1 JIC	PT2 BSPP	B1 DRILL	L LGTH	C HEX
7003-04-02	1/4	7/16-20	1/8-28	4.4	30.0	14.0
7003-04-04	1/4	7/16-20	1/4-19	4.4	33.0	19.0
7003-04-06	1/4	7/16-20	3/8-19	4.4	35.0	22.0
7003-06-04	3/8	9/16-18	1/4-19	7.5	33.1	19.0
7003-06-06	3/8	9/16-18	3/8-19	7.5	35.1	22.0
7003-06-08	3/8	9/16-18	1/2-14	7.5	37.1	27.0
7003-08-06	1/2	3/4-16	3/8-19	9.9	37.7	22.0
7003-08-08	1/2	3/4-16	1/2-14	9.9	39.7	27.0
7003-08-10	1/2	3/4-16	5/8-14	9.9	41.7	30.0
7003-08-12	1/2	3/4-16	3/4-14	9.9	44.7	32.0
7003-10-08	5/8	7/8-14	1/2-14	12.3	42.3	27.0
7003-10-10	5/8	7/8-14	5/8-14	12.3	44.3	30.0
7003-10-12	5/8	7/8-14	3/4-14	12.3	47.3	32.0
7003-12-12	3/4	1-1/16-12	3/4-14	15.5	49.9	32.0
7003-12-16	3/4	1-1/16-12	1-11	15.5	52.9	41.0
7003-16-12	1	1-5/16-12	3/4-14	21.5	34.1	36.0
7003-16-16	1	1-5/16-12	1-11	21.5	54.1	41.0
7003-20-20	1-1/4	1-5/8-12	1-1/4-11	27.5	60.3	50.0
7003-24-24	1-1/2	1-7/8-12	1-1/2-11	33.0	68.5	55.0
7003-32-32	2	2-1/2-12	2-11	45.0	79.9	70.0

MJ-FBSPPS
7004 Series

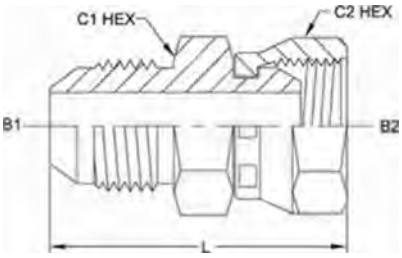

PART NO.SIZE	TUBE O.D	B1 JIC	B2 BSPP	B1 DRILL	B2 DRILL	I LGTH	C2 HEX	CI HEX
7004-04-02	1/4	7/16-20	1/8-28	4.4	3.5	36.8	14.0	12.0
7004-04-04	1/4	7/16-20	1/4-19	4.4	4.7	38.0	19.0	14.0
7004-04-06	1/4	7/16-20	3/8-19	4.4	7.9	41.0	22.0	19.0
7004-06-04	3/8	9/16-18	1/4-19	7.5	4.7	38.7	19.0	17.0
7004-06-06	3/8	9/16-18	3/8-19	7.5	7.9	41.1	22.0	19.0
7004-06-08	3/8	9/16-18	1/2-14	7.5	11.1	46.1	27.0	22.0
7004-08-06	1/2	3/4-16	3/8-19	9.9	7.9	43.4	22.0	19.0
7004-08-08	1/2	3/4-16	1/2-14	9.9	11.1	48.7	27.0	22.0
7004-08-10	1/2	3/4-16	5/8-14	9.9	14.3	53.7	30.0	22.0
7004-08-12	1/2	3/4-16	3/4-14	9.9	16.7	53.7	32.0	27.0
7004-10-08	5/8	7/8-14	1/2-14	12.3	11.1	50.5	27.0	24.0
7004-10-10	5/8	7/8-14	5/8-14	12.3	14.3	53.5	30.0	24.0
7004-10-12	5/8	7/8-14	3/4-14	12.3	16.7	56.3	32.0	27.0
7004-12-12	3/4	1-1/16-12	3/4-14	15.5	16.7	58.0	32.0	27.0
7004-12-16	3/4	1-1/16-12	1-11	15.5	22.2	68.9	41.0	33.0
7004-12-24	3/4	1-1/16-12	1-1/2-11	15.5	33.3	73.7	55.0	50.0
7004-16-12	1	1-5/16-12	3/4-14	21.5	16.7	59.1	32.0	36.0
7004-16-16	1	1-5/16-12	1-11	21.5	22.2	66.1	41.0	36.0
7004-20-20	1-1/4	1-5/8-12	1-1/4-11	27.5	28.6	70.4	50.0	46.0
7004-24-24	1-1/2	1-7/8-12	1-1/2-11	33.0	33.3	79.3	55.0	50.0
7004-32-32	2	2-1/2-12	2-11	45.0	46.0	92.5	70.0	65.0

International Fittings

MJ-MM Port Metric
7005 Series

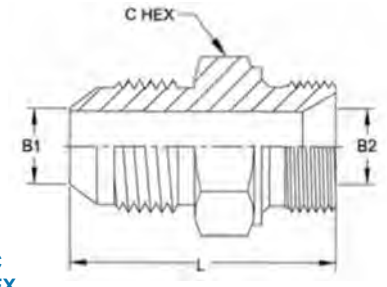

PART NO.SIZE	TUBE O.D	B1 JIC	B2 MM	B1 DRILL	B2 DRILL	L LGTH	C HEX
7005-04-08	1/4	7/16-20	M8 x 1	4.4	3.0	27.5	16.0
7005-04-10	1/4	7/16-20	MIOxl	4.4	4.5	27.5	16.0
7005-04-12	1/4	7/16-20	M12 x 1.5	4.4	6.0	33.0	19.0
7005-04-14	1/4	7/16-20	M14 x 1.5	4.4	7.5	33.0	19.0
7005-04-18	1/4	7/16-20	M18 x 1.5	4.4	11.0	34.5	24.0
7005-04-20	1/4	7/16-20	M20 x 1.5	4.4	12.5	35.0	27.0
7005-04-22	1/4	7/16-20	M22 x 1.5	4.4	14.0	38.0	27.0
7005-05-12	5/16	1/2-20	M12 x 1.5	6.0	6.0	33.0	19.0
7005-06-12	3/8	9/16-18	M12 x 1.5	7.5	6.0	33.1	19.0
7005-06-14	3/8	9/16-18	M14 x 1.5	7.5	7.5	33.1	19.0
7005-06-16	3/8	9/16-18	M16 x 1.5	7.5	9.0	34.6	22.0
7005-06-18	3/8	9/16-18	M18 x 1.5	7.5	11.0	34.6	24.0
7005-06-20	3/8	9/16-18	M20 x 1.5	7.5	12.5	35.1	27.0
7005-08-12	1/2	3/4-16	M12 x 1.5	9.9	6.0	36.4	19.0
7005-08-14	1/2	3/4-16	M14 x 1.5	9.9	7.5	36.4	19.0
7005-08-16	1/2	3/4-16	M16 x 1.5	9.9	9.0	37.2	22.0
7005-08-18	1/2	3/4-16	M18 x 1.5	9.9	11.0	37.2	24.0
7005-08-20	1/2	3/4-16	M20 x 1.5	9.9	12.5	37.7	27.0
7005-08-22	1/2	3/4-16	M22 x 1.5	9.9	14.0	40.7	27.0
7005-08-27	1/2	3/4-16	M27 x 2	9.9	18.0	42.7	32.0
7005-10-18	5/8	7/8-14	M18 x 1.5	12.3	11.0	40.5	24.0
7005-10-20	5/8	7/8-14	M20 x 1.5	12.3	12.5	40.3	27.0
7005-10-22	5/8	7/8-14	M22 x 1.5	12.3	14.0	43.3	27.0
7005-10-26	5/8	7/8-14	M26 x 1.5	12.3	18.0	45.3	32.0
7005-12-22	3/4	1-1/16-12	M22 x 1.5	15.5	14.0	47.0	27.0
7005-12-24	3/4	1-1/16-12	M24 x 1.5	15.5	15.5	47.4	32.0
7005-12-26	3/4	1-1/16-12	M26 x 1.5	15.5	18.0	47.9	32.0
7005-12-27	3/4	1-1/16-12	M27 x 2	15.5	18.0	47.9	32.0
7005-16-33	1	1-5/16-12	M33 x 2	21.5	23.0	52.1	41.0
7005-20-30	1-1/4	1-5/8-12	M30 x 2	27.5	21.0	55.4	46.0
7005-20-42	1-1/4	1-5/8-12	M42 x 2	27.5	30.0	56.3	50.0
7005-24-42	1-1/2	1-7/8-12	M42 x 2	33.0	30.0	62.3	50.0
7005-24-48	1-1/2	1-7/8-12	M48 x 2	33.0	36.0	63.5	55.0

ADD -BS AS SUFFIX TO ORDER WITH BONDED SEAL
ORDER PART NUBER 7001 FOR RETAINING RING STYLE
ORDER PART NUBER 7640 FOR ISO 6149-3 STYLE

MJ-MM Light Metric (Dual Purpose)
7005-L Series

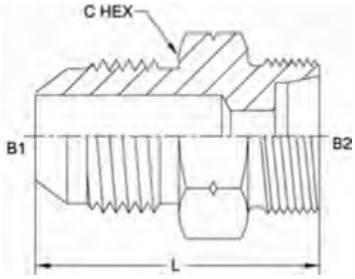

PART NO.SIZE	B1 TUBE D.D	B2 TUBE D.D	B1 JIC	B2 MM	81 DRILL	B2 DRILL	I LGTH	C HEX
7005-04-L06-12	1/4	06	7/16-20	M12 x 1.5	4.4	4.0	30.8	12.0
7005-04-L08-14	1/4	08	7/16-20	M14 x 1.5	4.4	6.0	29.0	14.0
7005-06-L08-14	3/8	08	9/16-18	M14 x 1.5	7.5	6.0	31.7	17.0
7005-06-L10-16	3/8	10	9/16-18	M16 x 1.5	7.5	8.0	32.7	17.0
7005-06-L12-18	3/8	12	9/16-18	M18 x 1.5	7.5	10.0	31.1	19.0
7005-08-L10-16	1/2	10	3/4-16	M16 x 1.5	9.9	8.0	35.4	19.0
7005-08-L12-18	1/2	12	3/4-16	M18 x 1.5	9.9	10.0	35.4	19.0
7005-08-L15-22	1/2	15	3/4-16	M22 x 1.5	9.9	12.0	34.7	24.0
7005-10-L15-22	5/8	15	7/8-14	M22 x 1.5	12.3	12.0	40.5	24.0
7005-10-L18-26	5/8	18	7/8-14	M26 x 1.5	12.3	15.0	38.3	27.0
7005-12-L15-22	3/4	15	1-1/16-12	M22 x 1.5	15.5	12.0	45.0	27.0
7005-12-L18-26	3/4	18	1-1/16-12	M26 x 1.5	15.5	15.0	45.0	27.0
7005-12-L22-30	3/4	22	1-1/16-12	M30 x 2	15.5	19.0	42.9	32.0
7005-12-L28-36	3/4	28	1-1/16-12	M36 x 2	15.5	24.0	43.9	41.0
7005-16-L22-30	1	22	1-5/16-12	M30 x 2	21.5	19.0	48.1	36.0
7005-16-L28-36	1	28	1-5/16-12	M36 x 2	21.5	24.0	45.1	41.0
7005-16-L35-45	1	35	1-5/16-12	M45 x 2	21.5	30.0	48.1	46.0
7005-20-L35-45	1-1/4	35	1-5/8-12	M45 x 2	27.5	30.0	53.4	46.0
7005-24-L42-52	1-1/2	42	1-7/8-12	M52 x 2	33.0	36.0	54.5	55.0

MJ-MM Heavy Metric (Dual Purpose)
7005-S Series

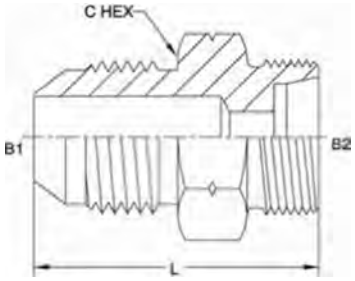

PART N0.SIZE	B1 TUBE D.D	B2TUBE O.D	B1 JIC	B2 MM	B1 DRILL	B2 DRILL	I LGTH	C HEX
7005-04-S06-14	1/4	06	7/16-20	M14 x 1.5	4.4	4.0	32.0	14.0
7005-04-S08-16	1/4	08	7/16-20	M16 x 1.5	4.4	5.0	34.0	17.0
7005-06-S08-16	3/8	08	9/16-18	M16 x 1.5	7.5	5.0	33.7	17.0
7005-06-SI 0-18	3/8	10	9/16-18	M18 x 1.5	7.5	7.0	34.1	19.0
7005-06-SI 2-20	3/8	12	9/16-18	M20 x 1.5	7.5	8.0	36.1	22.0
7005-08-S08-16	1/2	08	3/4-16	M16 x 1.5	9.9	5.0	36.4	19.0
7005-08-SI 0-18	1/2	10	3/4-16	M18 x 1.5	9.9	7.0	36.4	19.0
7005-08-SI 2-20	1/2	12	3/4-16	M20 x 1.5	9.9	8.0	38.7	22.0
7005-08-S14-22	1/2	14	3/4-16	M22x 1.5	9.9	10.0	40.7	24.0
7005-08-SI 6-24	1/2	16	3/4-16	M24 x 1.5	9.9	12.0	40.7	27.0
7005-10-S12-20	5/8	12	7/8-14	M20 x 1.5	12.3	8.0	40.5	24.0
7005-10-S16-24	5/8	16	7/8-14	M24 x 1.5	12.3	12.0	43.3	27.0
7005-12-S16-24	3/4	16	1-1/16-12	M24 x 1.5	15.5	12.0	47.0	27.0
7005-12-S20-30	3/4	20	1-1/16-12	M30 x 2	15.5	16.0	49.9	32.0
7005-12-S25-36	3/4	25	1-1/16-12	M36 x 2	15.5	20.0	53.9	41.0
7005-16-S30-42	1	30	1-5/16-12	M42 x 2	21.5	25.0	57.1	46.0
7005-20-S38-52	1-1/4	38	1-5/8-12	M52 x 2	27.5	32.0	63.3	55.0
7005-24-S38-52	1-1/2	38	1-7/8-12	M52 x 2	33.0	32.0	66.5	55.0

International Fittings

MJ-FMS Light Metric
7007-L Series

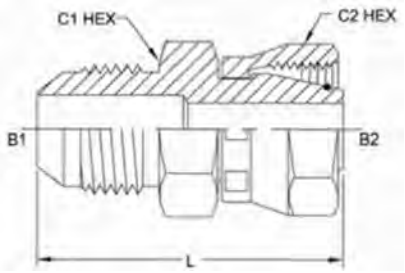

PART NO.SIZE	B1 TUBE O.D	B2TUBE O.D	B1 JIG	B2 MS	B1 DRILL	B2 DRILL	L LBTH	CI HEX	C2 HEX
7007-04-L06-12	1/4	06	7/16-20	M12 x 1.5	4.4	2.5	37.8	12.0	14.0
7007-05-L06-12	5/16	06	1/2-20	M12 x 1.5	6.0	2.5	37.8	14.0	14.0
7007-06-L08-14	3/8	08	9/16-18	M14 x 1.5	7.5	4.0	39.2	17.0	17.0
7007-06-L10-16	3/8	10	9/16-18	M16 x 1.5	7.5	6.0	41.2	17.0	19.0
7007-06-L12-18	3/8	12	9/16-18	M18 x 1.5	7.5	8.0	39.1	19.0	22.0
7007-06-L15-22	3/8	15	9/16-18	M22 x 1.5	7.5	10.0	39.6	22.0	27.0
7007-08-L10-16	1/2	10	3/4-16	M16 x 1.5	9.9	6.0	43.9	19.0	19.0
7007-08-L12-18	1/2	12	3/4-16	M18 x 1.5	9.9	8.0	43.9	19.0	22.0
7007-08-L15-22	1/2	15	3/4-16	M22 x 1.5	9.9	10.0	42.2	22.0	27.0
7007-08-L18-26	1/2	18	3/4-16	M26 x 1.5	9.9	13.0	43.2	24.0	32.0
7007-10-L12-18	5/8	12	7/8-14	M18 x 1.5	12.3	8.0	48.0	24.0	22.0
7007-10-L15-22	5/8	15	7/8-14	M22 x 1.5	12.3	10.0	50.0	24.0	27.0
7007-12-L18-26	3/4	18	1-1/16-12	M26x 1.5	15.5	13.0	54.5	27.0	32.0
7007-12-L22-30	3/4	22	1-1/16-12	M30x2	15.5	17.0	56.5	27.0	36.0
7007-20-L35-45	1-1/4	35	1-5/8-12	M45 x 2	27.5	29.0	64.9	46.0	50.0

MJ-FMS Heavy Metric
7007-S Series

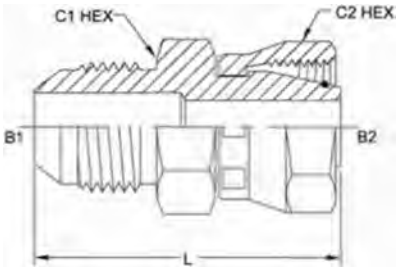

PART NO.SIZE	B1 TUBE O.D	B2 TUBE D.D	B1 JIC	B2 MS	B1 DRILL	B2 DRILL	I LGTH	CI HEX	C2 HEX
7007-04-S06-14	1/4	06	7/16-20	M14x 1.5	4.4	2.5	39.8	12.0	17.0
7007-06-SI 0-18	3/8	10	9/16-18	M18 x 1.5	7.5	6.0	43.2	17.0	22.0
7007-06-SI 2-20	3/8	12	9/16-18	M20 x 1.5	7.5	8.0	39.1	19.0	24.0
7007-08-SI 2-20	1/2	12	3/4-16	M20 x 1.5	9.9	8.0	45.9	19.0	24.0
7007-08-SI 6-24	1/2	16	3/4-16	M24 x 1.5	9.9	11.0	43.7	22.0	30.0
7007-10-S12-20	5/8	12	7/8-14	M20 x 1.5	12.3	8.0	50.0	24.0	24.0
7007-12-SI 6-24	3/4	16	1-1/16-12	M24 x 1.5	15.5	11.0	57.0	27.0	30.0
7007-12-S20-30	3/4	20	1-1/16-12	M30 x 2	15.5	14.0	61.0	27.0	36.0
7007-12-S25-36	3/4	25	1-1/16-12	M36 x 2	15.5	19.0	55.4	32.0	46.0
7007-16-S30-42	1	30	1-5/16-12	M42 x 2	21.5	24.0	62.1	41.0	50.0
7007-20-S30-42	1-1/4	30	1-5/8-12	M42 x 2	27.5	24.0	71.4	46.0	50.0
7007-24-S38-52	1-1/2	38	1-7/8-12	M52 x 2	33.0	32.0	82.3	50.0	60.0

MJ-MJIS Union
7008 Series

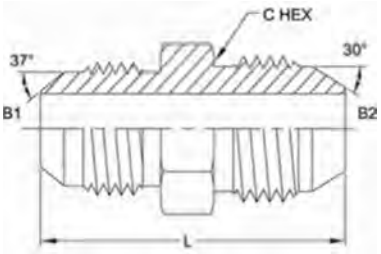

PART NO.SIZE	TUBE O.D	B1 JIC	B2 JIS BSPP	B1 DRILL	B2 DRILL	I LGTH	C HEX
7008-04-02	1/4	7/16-20	1/8-28	4.4		34.0	14.0
7008-04-04	1/4	7/16-20	1/4-19	4.4	5.0	38.0	17.0
7008-06-06	3/8	9/16-18	3/8-19	7.5	8.0	40.1	19.0
7008-08-08	1/2	3/4-16	1/2-14	9.9	11.0	46.7	22.0
7008-12-12	3/4	1-1/16-12	3/4-14	15.5	16.0	55.9	30.0

MJ-FJIS
7008-F Series

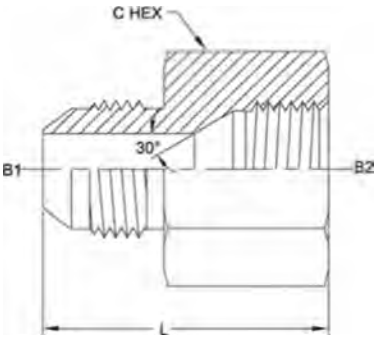

PART NO.SIZE	TUBE O.D	B1 JIC	B2 JIS BSPP	B1 DRILL	I LGTH	C HEX
7008-F-04-04	1/4	7/16-20	1/4-19	4.4	33.0	19.0
7008-F-06-06	3/8	9/16-18	3/8-19	7.5	35.1	22.0
7008-F-08-08	1/2	3/4-16	1/2-14	9.9	39.7	27.0
7008-F-10-10	5/8	7/8-14	5/8-14	12.3	44.3	30.0
7008-F-12-12	3/4	1-1/16-12	3/4-14	15.5	49.9	32.0
7008-F-16-16	1	1-5/16-12	1-11	21.5	54.1	41.0

International Fittings

Komatsu MJ-MK Union
7009 Series

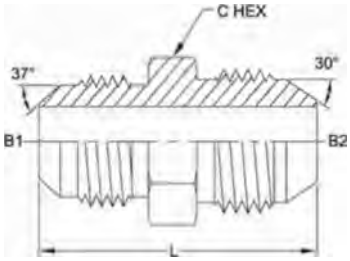

PART NO.SIZE	TUBE O.D	B1 JIC	B2 MK METRIC	B1 DRILL	B2 DRILL	L LGTH	C HEX
7009-04-14	1/4	7/16-20	M14 x 1.5	4.4	5.0	37.4	17.0
7009-06-16	3/8	9/16-18	M16 x 1.6				19.0
7009-06-18	3/8	9/16-18	M18 x 1.5	7.5	8.0	39.2	22.0
7009-08-22	1/2	3/4-16	M22 x 1.5	9.9	10.0	45.4	24.0
7009-10-24	5/8	7/8-14	M24 x 1.5	12.3	13.0	51.3	27.0
7009-12-30	3/4	1-1/16-12	M30 x 1.5	15.5	14.0	58.5	32.0
7009-16-33	1	1-5/16-12	M33 x 1.5	21.5	22.0	63.7	38.0

Komatsu MJ-FK
7009-F Series

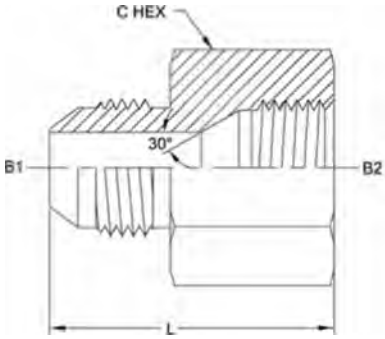

PART NO.SIZE	TUBE O.D	B1 JIC	B2 FK METRIC	B1 DRILL	I LGTH	CI HEX
7009-F-04-14	1/4	7/16-20	M14 x 1.5	4.4	35.4	19.0
7009-F-06-18	3/8	9/16-18	M18 x 1.5	7.5	36.6	24.0
7009-F-08-22	1/2	3/4-16	M22 x 1.5	9.9	42.2	27.0
7009-F-10-24	5/8	7/8-14	M24 x 1.5	12.3	41.8	32.0
7009-F-12-30	3/4	1-1/16-12	M30 x 1.5	15.5	49.4	36.0
7009-F-16-33	1	1-5/16-12	M33 x 1.5	21.5	55.1	41.0

FJS-MBSPP
7022 Series

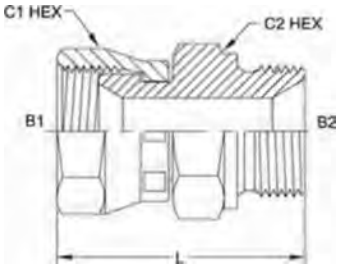

PART NO.SIZE	TUBE O.D	B1 JIC	B2 BSPP	B1 DRILL	B2 DRILL	L LGTH	CI HEX	C2 HEX
7022-04-02	1/4	7/16-20	1/8-28	4.4	3.5	30.0	14.0	14.0
7022-04-04	1/4	7/16-20	1/4-19	4.4	4.7	35.0	14.0	19.0
7022-04-06	1/4	7/16-20	3/8-19	4.4	7.9	37.0	14.0	22.0
7022-05-04	5/16	1/2-20	1/4-19	6.0	4.7	36.7	17.0	19.0
7022-06-04	3/8	9/16-18	1/4-19	7.5	4.7	37.7	19.0	19.0
7022-06-06	3/8	9/16-18	3/8-19	7.5	7.9	39.7	19.0	22.0
7022-06-08	3/8	9/16-18	1/2-14	7.5	11.1	43.7	19.0	27.0
7022-08-06	1/2	3/4-16	3/8-19	9.9	7.9	42.1	22.0	22.0
7022-08-08	1/2	3/4-16	1/2-14	9.9	11.1	46.1	22.0	27.0
7022-10-08	5/8	7/8-14	1/2-14	12.3	11.1	48.9	27.0	27.0
7022-10-10	5/8	7/8-14	5/8-14	12.3	14.3	52.9	27.0	30.0
7022-12-12	3/4	1-1/16-12	3/4-14	15.5	16.7	55.4	32.0	32.0
7022-16-12	3/4	1-5/16-12	3/4-14	21.5	16.7	55.3	41.0	36.0
7022-16-16	1	1-5/16-12	1-11	21.5	22.2	63.7	41.0	41.0
7002-20-20	1-1/4	1-5/8-12	1-1/4-11	27.5	28.6	70.1	50.0	50.0
7002-24-24	1-1/2	1-7/8-12	1-1/2-11	33.0	33.3	81.1	60.0	55.0

FJS-FBSPP
7023 Series

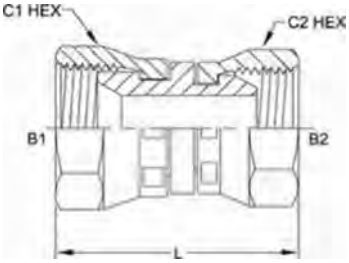

PART ND.SIZE	TUBE O.D	B1 JIC	B2 BSPP	B1 DRILL	B2 DRILL	L LGTH	CI HEX	C2 HEX
7023-04-04	1/4	7/16-20	1/4-19	4.4	4.7	37.0	14.0	19.0
7023-06-04	1/4	9/16-18	1/4-19	7.5	4.7	39.7	19.0	19.0
7023-06-06	3/8	9/16-18	3/8-19	7.5	7.9	41.7	19.0	22.0
7023-06-08	3/8	9/16-18	1/2-14	7.5	11.1	44.7	19.0	27.0
7023-08-06	1/2	3/4-16	3/8-19	9.9	7.9	44.1	22.0	22.0
7023-08-08	1/2	3/4-16	1/2-14	9.9	11.1	47.1	22.0	27.0

International Fittings

FJS-MM Metric
7025 Series

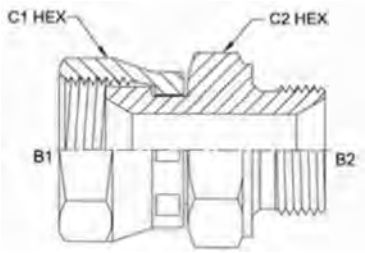

PART NO.SIZE	TUBE O.D	B1 JIC	B2 MM	B1 DRILL	B2 DRILL	L LGTH	CI HEX	C2 HEX
7025-05-12	5/16	1/2-20	M12 x 1.5	6.0	6.0	37.7	17.0	19.0
7025-06-14	3/8	9/16-18	M14 x 1.5	7.5	7.5	38.7	19.0	19.0
7025-06-16	3/8	9/16-18	M16 x 1.5	7.5	9.0	40.2	19.0	22.0
7025-06-18	3/8	9/16-18	M18 x 1.5	7.5	11.0	40.2	19.0	24.0
7025-06-20	3/8	9/16-18	M20 x 1.5	7.5	12.5	40.7	19.0	27.0
7025-06-22	3/8	9/16-18	M22 x 1.5	7.5	14.0	43.7	19.0	27.0
7025-08-16	1/2	3/4-16	M16 x 1.5	9.9	9.0	42.6	22.0	22.0
7025-08-18	1/2	3/4-16	M18 x 1.5	9.9	11.0	42.6	22.0	24.0
7025-08-20	1/2	3/4-16	M20 x 1.5	9.9	12.5	43.1	22.0	27.0
7025-08-22	1/2	3/4-16	M22 x 1.5	9.9	14.0	46.1	22.0	27.0
7025-10-08	5/8	7/8-14	M8 x 1	12.3	3.0	40.8	27.0	24.0
7025-10-16	5/8	7/8-14	M16x 1.5	12.3	9.0	44.8	27.0	24.0
7025-10-18	5/8	7/8-14	M18 x 1.5	12.3	11.0	44.8	27.0	24.0
7025-10-20	5/8	7/8-14	M20 x 1.5	12.3	12.5	45.9	27.0	27.0
7025-10-22	5/8	7/8-14	M22 x 1.5	12.3	14.0	48.9	27.0	27.0

MP-MBSPT Nipple
7030 Series

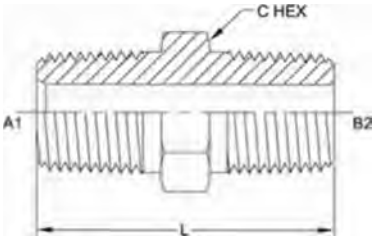

PART ND.SIZE	A1 NPTF	B2 BSPT	A1 DRILL	B2 DRILL	L LGTH	C HEX
7030-02-02	1/8-27	1/8-28	4.8	4.8	26.0	11.0
7030-04-04	1/4-18	1/4-19	7.0	7.0	35.8	14.0
7030-04-06	1/4-18	3/8-19	7.0	10.3	35.8	19.0
7030-06-04	3/8-18	1/4-19	10.3	7.0	35.8	19.0
7030-06-06	3/8-18	3/8-19	10.3	10.3	35.8	19.0
7030-08-08	1/2-14	1/2-14	13.5	13.5	46.9	22.0
7030-12-12	3/4-14	3/4-14	18.0	18.0	48.7	27.0
7030-16-16	1-11-1/2	1-11	23.8	23.8	58.5	36.0
7030-20-20	1-1/4-11-1/2	1-1/4-11	31.7	31.7	61.9	42.0
7030-24-24	1-1/2-11-1/2	1-1/2-11	38.0	38.0	65.3	50.0
7030-32-32	2-11-1/2	2-11	49.0	49.0	70.7	65.0

MP-MBSPP Nipple
7032 Series

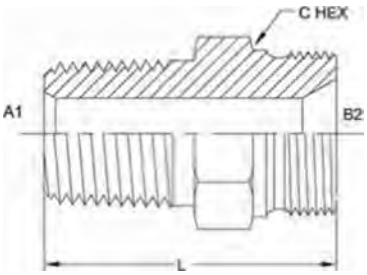

PART NO.SIZE	A1 NPTF	B2 BSPP	A1 DRILL	B2 DRILL	I LGTH	C HEX
7032-02-02	1/8-27	1/8-28	4.8	3.5	23.2	14.0
7032-02-04	1/8-27	1/4-19	4.8	4.7	28.2	19.0
7032-02-06	1/8-27	3/8-19	4.8	7.9	30.2	22.0
7032-04-02	1/4-18	1/8-28	7.0	3.5	29.1	14.0
7032-04-04	1/4-18	1/4-19	7.0	4.7	32.7	19.0
7032-04-06	1/4-18	3/8-19	7.0	7.9	34.7	22.0
7032-04-08	1/4-18	1/2-14	7.0	11.1	38.7	27.0
7032-06-02	3/8-18	1/8-28	10.3	3.5	29.1	19.0
7032-06-04	3/8-18	1/4-19	10.3	4.7	32.1	19.0
7032-06-06	3/8-18	3/8-19	10.3	7.9	34.7	22.0
7032-06-08	3/8-18	1/2-14	10.3	11.1	38.7	27.0
7032-06-12	3/8-18	3/4-14	10.3	16.7	42.7	32.0
7032-08-04	1/2-14	1/4-19	13.5	4.7	38.4	22.0
7032-08-06	1/2-14	3/8-19	13.5	7.9	39.4	22.0
7032-08-08	1/2-14	1/2-14	13.5	11.1	43.5	27.0
7032-08-10	1/2-14	5/8-14	13.5	14.3	47.5	30.0
7032-08-12	1/2-14	3/4-14	13.5	16.7	47.5	32.0
7032-08-16	1/2-14	1-11	13.5	22.2	53.5	41.0
7032-12-06	3/4-14	3/8-19	18.0	7.9	41.2	27.0
7032-12-08	3/4-14	1/2-14	18.0	11.1	43.2	27.0
7032-12-10	3/4-14	5/8-14	18.0	14.3	47.5	30.0
7032-12-12	3/4-14	3/4-14	18.0	16.7	47.5	32.0
7032-12-16	3/4-14	1-11	18.0	22.2	53.5	41.0
7032-16-08	1-11-1/2	1/2-14	23.8	11.1	48.1	36.0
7032-16-12	1-11-1/2	3/4-14	23.8	16.7	50.1	36.0
7032-16-16	1-11-1/2	1-11	23.8	22.2	58.4	41.0
7032-16-20	1-11-1/2	1-1/4-11	23.8	28.6	63.4	50.0
7032-20-12	1-1/4-11-1/2	3/4-14	31.7	16.7	52.8	42.0
7032-20-16	1-1/4-11-1/2	1-11	31.7	22.2	55.8	42.0
7032-20-20	1-1/4-11-1/2	1-1/4-11	31.7	28.6	64.1	50.0
7032-20-24	1-1/4-11-1/2	1-1/2-11	31.7	33.3	70.1	55.0
7032-24-20	1-1/2-11-1/2	1-1/4-11	38.0	28.6	59.4	50.0
7032-24-24	1-1/2-11-1/2	1-1/2-11	38.0	33.3	70.9	55.0
7032-24-32	1-1/2-11-1/2	2-11	38.0	46.0	79.9	70.0
7032-32-20	2-11-1/2	1-1/4-11	49.0	28.6	64.0	65.0
7032-32-32	2-11-1/2	2-11	49.0	46.0	80.7	70.0

International Fittings

MP-FBSPP
7033 Series

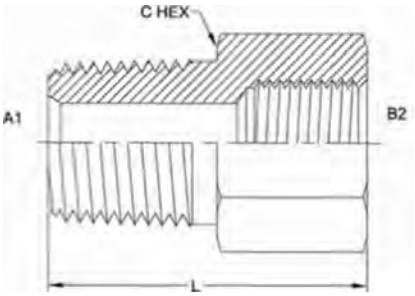

PART NO.SIZE	A1 NPTF	B2 BSPP	A1 DRILL	I LGTH	C HEX
7033-02-02	1/8-27	1/8-28	4.8	26.2	14.0
7033-04-04	1/4-18	1/4-19	7.0	33.7	19.0
7033-06-04	3/8-18	1/4-19	10.3	33.7	19.0
7033-06-06	3/8-18	3/8-19	10.3	35.7	22.0
7033-08-04	1/2-14	1/4-19	13.5	27.4	22.0
7033-08-06	1/2-14	3/8-19	13.5	40.5	22.0
7033-08-08	1/2-14	1/2-14	13.5	42.5	27.0
7033-12-12	3/4-14	3/4-14	18.0	47.5	32.0
7033-16-16	1-11-1/2	1-11	23.8	55.4	41.0
7033-20-20	1-1/4-11-1/2	1-1/4-11	31.7	61.1	50.0
7033-24-24	1-1/2-11-1/2	1-1/2-11	38.0	66.9	55.0
7033-32-32	2-11-1/2	2-11	49.0	72.7	70.0

MP-FBSPPS
7034 Series

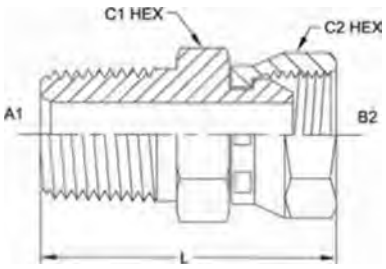

PART NO.SIZE	A1 NPTF	B2 BSPPS	A1 DRILL	B2 DRILL	L LGTH	CI HEX	C2 HEX
7034-02-02	1/8-27	1/8-28	4.8	3.5	31.2	12.0	14.0
7034-02-04	1/8-27	1/4-19	4.8	4.7	34.2	14.0	19.0
7034-04-04	1/4-18	1/4-19	7.0	4.7	38.1	14.0	19.0
7034-04-06	1/4-18	3/8-19	7.0	7.9	41.7	19.0	22.0
7034-06-04	3/8-18	1/4-19	10.3	4.7	38.1	19.0	19.0
7034-06-06	3/8-18	3/8-19	10.3	7.9	40.1	19.0	22.0
7034-06-08	3/8-18	1/2-14	10.3	11.1	46.7	22.0	27.0
7034-08-06	1/2-14	3/8-19	13.5	7.9	46.4	22.0	22.0
7034-08-08	1/2-14	1/2-14	13.5	11.1	49.4	22.0	27.0
7034-12-08	3/4-14	1/2-14	18.0	11.1	51.2	27.0	27.0
7034-12-12	3/4-14	3/4-14	18.0	16.7	54.2	27.0	32.0
7034-16-12	1-11-1/2	3/4-14	23.8	16.7	59.1	36.0	32.0
7034-16-16	1-11-1/2	1-11	23.8	22.2	66.1	36.0	41.0

FNPT-MBSPT
7040 Series

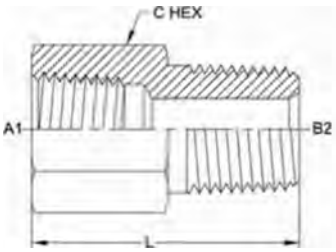

PART NO.SIZE	A1 NPTF	B2 BSPT	B2 DRILL	L LCTH	C HEX
7040-02-02	1/8-27	1/8-28	4.8	26.4	15.0
7040-04-04	1/4-18	1/4-19	7.0	35.3	19.0
7040-06-06	3/8-18	3/8-19	10.3	36.6	22.0
7040-08-08	1/2-14	1/2-14	13.5	47.5	28.0
7040-12-08	3/4-14	1/2-14	13.5	49.0	35.0
7040-12-12	3/4-14	3/4-14	18.0	49.0	35.0
7040-16-16	1-11-1/2	1-11	23.8	60.2	41.0
7040-24-24	1-1/2-11-1/2	1-1/2-11	38.0	64.3	60.0

FP-MBSPP
7042 Series

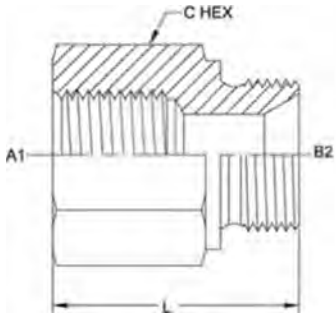

PART NO.SIZE	A1 NPTF	B2 BSPP	B2 DRILL	I LGTH	C HEX
7042-02-02	1/8-27	1/8-28	3.5	24.2	15.0
7042-02-04	1/8-27	1/4-19	4.7	18.0	19.0
7042-02-06	1/8-27	3/8-19	7.9	20.0	22.0
7042-02-08	1/8-27	1/2-14	11.1	24.0	27.0
7042-04-02	1/4-18	1/8-28	3.5	28.6	19.0
7042-04-04	1/4-18	1/4-19	4.7	31.6	19.0
7042-04-06	1/4-18	3/8-19	7.9	20.0	22.0
7042-04-08	1/4-18	1/2-14	11.1	24.0	27.0
7042-04-12	1/4-18	3/4-14	16.7	28.0	32.0
7042-06-04	3/8-18	1/4-19	4.7	32.9	22.0
7042-06-06	3/8-18	3/8-19	7.9	33.9	22.0
7042-06-08	3/8-18	1/2-14	11.1	24.0	27.0
7042-08-02	1/2-14	1/8-28	3.5	36.0	28.0
7042-08-04	1/2-14	1/4-19	4.7	39.0	28.0
7042-08-06	1/2-14	3/8-19	7.9	40.0	28.0
7042-08-08	1/2-14	1/2-14	11.1	42.0	28.0
7042-08-12	1/2-14	3/4-14	16.7	28.0	32.0
7042-12-08	3/4-14	1/2-14	11.1	43.5	35.0
7042-12-12	3/4-14	3/4-14	16.7	45.5	35.0
7042-16-16	1-11-1/2	1-11	22.2	54.8	41.0
7042-16-20	1-11-1/2	1-1/4-11	28.6	39.0	50.0
7042-20-16	1-1/4-11-1/2	1-11	22.2	57.1	50.0
7042-20-20	1-1/4-11-1/2	1-1/4-11	28.6	58.1	50.0
7042-20-24	1-1/4-11-1/2	1-1/2-11	33.3	45.0	55.0
7042-24-20	1-1/2-11-1/2	1-1/4-11	28.6	58.4	60.0
7042-24-24	1-1/2-11-1/2	1-1/2-11	33.3	60.4	60.0
7042-32-32	2-11-1/2	2-11	46.0	65.9	73.0

International Fittings

FP-MM Metric
7045 Series

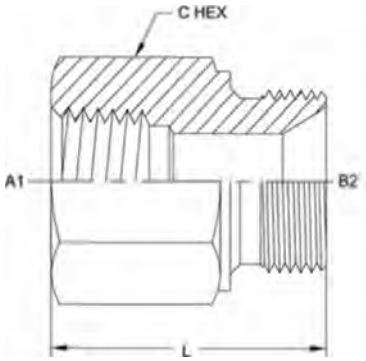

PART NO.SIZE	A1 NPTF	B2 MM	B2 DRILL	L LGTH	CI HEX
7045-02-06	1/8-27	M6 x 1			15.0
7045-02-08	1/8-27	M8 x 1	3.0	24.2	15.0
7045-02-10	1/8-27	MIOxl	4.5	13.5	16.0
7045-02-12	1/8-27	M12x 1.5	6.0	19.0	19.0
7045-02-14	1/8-27	M14 x 1.5	7.5	19.0	19.0
7045-02-16	1/8-27	M16 x 1.5	9.0	20.5	22.0
7045-02-18	1/8-27	M18 x 1.5	11.0	20.5	24.0
7045-02-20	1/8-27	M20 x 1.5	12.5	21.0	27.0
7045-04-10	1/4-18	MIOx 1	4.5	28.6	19.0
7045-04-12	1/4-18	M12 x 1.5	6.0	32.6	19.0
7045-04-14	1/4-18	M14 x 1.5	7.5	32.6	19.0
7045-04-16	3/8-18	M16x 1.5	9.0	33.9	22.0
7045-06-16	3/8-18	M16 x 1.5	9.0	33.9	22.0
7045-06-18	3/8-18	M18 x 1.5	11.0	20.5	24.0
7045-06-20	3/8-18	M20 x 1.5	12.5	21.0	27.0
7045-06-22	3/8-18	M22 x 1.5	14.0	24.0	27.0
7045-08-16	1/2-14	M16x 1.5	9.0	40.0	28.0
7045-08-18	1/2-14	M18 x 1.5	11.0	40.0	28.0
7045-08-22	1/2-14	M22 x 1.5	14.0	42.0	28.0
7045-08-26	1/2-14	M26x 1.5	18.0	26.0	32.0
7045-12-24	3/4-14	M24x 1.5	15.5	45.5	35.0
7045-12-26	3/4-14	M26x 1.5	18.0	45.5	35.0
7045-12-27	3/4-14	M27 x 2	18.0	45.5	35.0
7045-12-30	3/4-14	M30 x 2	21.0	30.0	36.0
7045-16-33	1-11-1/2	M33 x 2	23.0	53.8	41.0
7045-16-42	1-11-1/2	M42 x 2	30.0	32.0	50.0

MORB-MBSPP
7062 Series

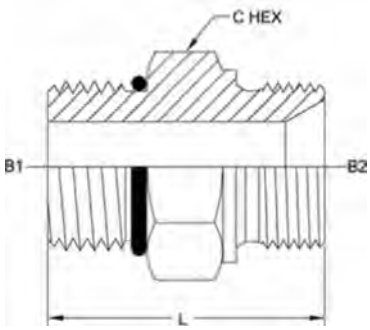

PART NO.SIZE	B1 SAE ORB	B2 BSPP	B1 DRILL	B2 DRIL	I LGTH	C HEX
7062-03-04	3/8-24	1/4-19	3.2	4.7	25.5	19.0
7062-04-04	7/16-20	1/4-19	4.4	4.7	27.1	19.0
7062-04-06	7/16-20	3/8-19	4.4	7.9	29.1	22.0
7062-05-04	1/2-20	1/4-19	6.0	4.7	27.1	19.0
7062-06-04	9/16-18	1/4-19	7.5	4.7	28.0	19.0
7062-06-06	9/16-18	3/8-19	7.5	7.9	30.0	22.0
7062-06-08	9/16-18	1/2-14	7.5	11.1	34.0	27.0
7062-08-06	3/4-16	3/8-19	9.9	7.9	32.8	22.0
7062-08-08	3/4-16	1/2-14	9.9	11.1	35.1	27.0
7062-08-10	3/4-16	5/8-14	9.9	14.3	39.1	30.0
7062-08-12	3/4-16	3/4-14	9.9	16.7	39.1	32.0
7062-10-06	7/8-14	3/8-19	12.3	7.9	35.7	27.0
7062-10-08	7/8-14	1/2-14	12.3	11.1	37.7	27.0
7062-10-12	7/8-14	3/4-14	12.3	16.7	40.7	32.0
7062-12-08	1-1/16-12	1/2-14	15.5	11.1	42.1	32.0
7062-12-12	1-1/16-12	3/4-14	15.5	16.7	44.1	32.0
7062-12-16	1-1/16-12	1-11	15.5	22.2	49.1	41.0
7062-16-12	1-5/16-12	3/4-14	21.4	16.7	44.9	41.0
7062-16-16	1-5/16-12	1-11	21.4	22.2	47.9	41.0
7062-20-16	1-5/8-12	1-11	27.4	22.2	49.7	50.0
7062-20-20	1-5/8-12	1-1/4-11	27.4	28.6	50.7	50.0
7062-24-20	1-7/8-12	1-1/4-11	33.3	28.6	52.5	55.0
7062-24-24	1-7/8-12	1-1/2-11	33.3	33.3	54.5	55.0

International Fittings

MJ-MBSPT
45° Elbow
7100 Series

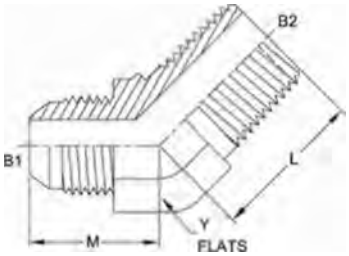

PART NO.SIZE	B1 JIC	B2 BSPT	B1 DRILL	B2 DRILL	M LGTH	L LGTH	Y FLATS
7100-04-02-FG	7/16-20	1/8-28	4.4	4.8	18.5	16.5	12.0
7100-04-04-FG	7/16-20	1/4-19	4.4	7.0	20.7	22.0	14.0
7100-06-04-FG	9/16-18	1/4-19	7.5	7.0	21.0	22.0	14.0
7100-06-06-FG	9/16-18	3/8-19	7.5	10.3	22.2	24.0	19.0
7100-08-06-FG	3/4-16	3/8-19	9.9	10.3	25.0	24.0	19.0
7100-08-08-FG	3/4-16	1/2-14	9.9	13.5	25.0	30.0	22.0
7100-10-08-FG	7/8-14	1/2-14	12.3	13.5	28.0	30.0	22.0
7100-12-12-FG	1-1/16-12	3/4-14	15.5	18.0	32.5	30.5	27.0
7100-16-16-FG	1-5/16-12	1-11	21.5	23.8	37.5	37.5	33.0

MJ-MBSPPSADJ
45° Elbow
7102 Series

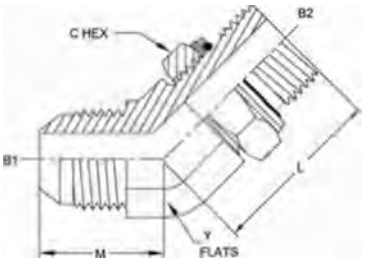

PART NO.SIZE	B1 JIC	B2 BSPP	B1 DRILL	B2 DRILL	M LGTH	L LGTH	C HEX	Y FLATS
7102-04-04-NWO-FG	7/16-20	1/4-19	4.4	7.5	20.7	29.0	19.0	14.0
7102-06-04-NWO-FG	9/16-18	1/4-19	7.5	7.5	21.0	29.0	19.0	14.0
7102-06-06-N WO-FG	9/16-18	3/8-19	7.5	9.9	22.2	33.0	22.0	19.0
7102-06-08-NWO-FG	9/16-18	1/2-14	7.5	12.3	22.2	38.5	27.0	22.0
7102-08-06-NWO-FG	3/4-16	3/8-19	9.9	9.9	25.0	33.0	22.0	19.0
7102-08-08-NWO-FG	3/4-16	1/2-14	9.9	12.3	25.0	38.5	27.0	22.0
7102-10-08-NWO-FG	7/8-14	1/2-14	12.3	12.3	28.0	38.5	27.0	22.0
7102-12-08-NWO-FG	1-1/16-12	1/2-14	15.5	12.3	32.5	44.0	27.0	27.0
7102-12-12-NWO-FG	1-1/16-12	3/4-14	15.5	15.5	32.5	44.0	36.0	27.0
7102-14-12-NWO-FG	1-3/16-12	3/4-14	18.3	15.5	37.0	44.0	36.0	33.0
7102-16-16-NWO-FG	1-5/16-12	1-11	21.5	21.5	37.5	47.0	41.0	33.0
7102-20-20-NWO-FG	1-5/8-12	1-1/4-11	27.5	27.5	40.5	48.0	50.0	41.0

MJ-MBSPT 90° Elbow
7200 Series

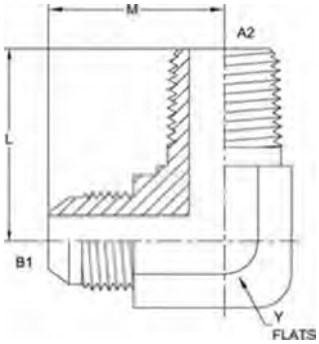

PART NO.SIZE	B1 JIC37	A2 BSPT	B1 BRILL	A2 ORILL	M LGTH	L LGTH	Y FLATS
7200-04-02-FG	7/16-20	1/8-28	4.4	4.8	22.5	20.0	12.0
7200-04-04-FG	7/16-20	1/4-19	4.4	7.0	26.7	28.0	14.0
7200-06-04-FG	9/16-18	1/4-19	7.5	7.0	27.0	28.0	14.0
7200-06-06-FG	9/16-18	3/8-19	7.5	10.3	29.2	31.0	19.0
7200-08-06-FG	3/4-16	3/8-19	9.9	10.3	32.0	31.0	19.0
7200-08-08-FG	3/4-16	1/2-14	9.9	13.5	34.0	37.5	22.0
7200-12-08-FG	1-1/16-12	1/2-14	15.5	13.5	42.0	40.5	27.0
7200-12-12-FG	1-1/16-12	3/4-14	15.5	18.0	42.0	40.5	27.0
7200-16-16-FG	1-5/16-12	1-11	21.5	23.8	46.0	50.0	33.0
7200-20-20-FG	1-5/8-12	1-1/4-11	27.5	31.7	52.5	60.5	41.0

MJ-MBSPPSADJ 90° Elbow
7202-NWO Series

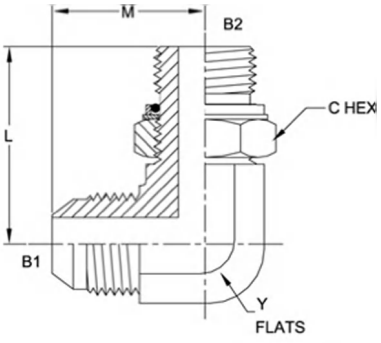

PART NO.SIZE	B1 JIC37	B2 BSPP	B1 DRILL	B2 DRILL	M LGTH	L LGTH	C HEX	Y FLATS
7202-04-02-NOW-FG	7/16-20	1/8-28	4.4	4.4	22.5	26.5	14.0	12.0
7202-04-04-NWO-FG	7/16-20	1/4-19	4.4	7.5	23.7	32.0	19.0	14.0
7202-04-06-NWO-FG	7/16-20	3/8-19	4.4	9.9	28.7	37.0	22.0	19.0
7202-05-02-NWO-FG	1/2-20	1/8-28	6.0	4.4	24.0	28.0	14.0	14.0
7202-05-04-NWO-FG	1/2-20	1/4-19	6.0	7.5	24.0	32.0	19.0	14.0
7202-06 04-NWO-FG	9/16-18	1/4-19	7.5	7.5	27.0	32.0	19.0	14.0
7202-06-06-NWO-FG	9/16-18	3/8-19	7.5	9.9	29.2	37.0	22.0	19.0
7202-06-08-NWO-FG	9/16-18	1/2-14	7.5	12.3	31.2	43.0	27.0	22.0
7202-08-04-NWO-FG	3/4-16	1/4-19	9.9	7.5	32.0	37.0	19.0	19.0
7202-08-06-NWO-FG	3/4-16	3/8-19	9.9	9.9	32.0	37.0	22.0	19.0
7202-08-08-NWO-FG	3/4-16	1/2-14	9.9	12.3	34.0	43.0	27.0	22.0
7202-08-12-NWO-FG	3/4-16	3/4-14	9.9	15.5	35.9	49.5	36.0	27.0
7202-10-06-NWO-FG	7/8-14	3/8-19	12.3	9.9	37.0	37.0	22.0	22.0
7202-10-08-NWO-FG	7/8-14	1/2-14	12.3	12.3	37.0	43.0	27.0	22.0
7202-10-12-NWO-FG	7/8-14	3/4-14	12.3	15.5	39.0	49.5	36.0	27.0
7202-12-08-NWO-FG	1-1/16-12	1/2-14	15.5	12.3	42.0	49.5	27.0	27.0
7202-12-12-NWO-FG	1-1/16-12	3/4-14	15.5	15.5	42.0	49.5	36.0	27.0
7202-12-16-NWO-FG	1-1/16-12	1-11	15.5	21.5	44.7	52.0	41.0	33.0
7202-16-12-NWO-FG	1-5/16-12	3/4-14	21.5	15.5	46.0	49.5	36.0	33.0
7202-16-16-NWO-FG	1-5/16-12	1-11	21.5	21.5	46.0	52.0	41.0	33.0
7202-16-20-NWO-FG	1-5/16-12	1-1/4-11	21.5	27.5	51.2	57.0	50.0	41.0
7202-20-20-NWO-FG	1-5/8-12	1-1/4-11	27.5	27.5	52.5	57.0	50.0	41.0
7202-24-24-NWO-FG	1-7/8-12	1-1/2-11	33.0	33.0	59.0	60.5	55.0	48.0

International Fittings

MJ-FBSPPS 90° Elbow
7204 Series

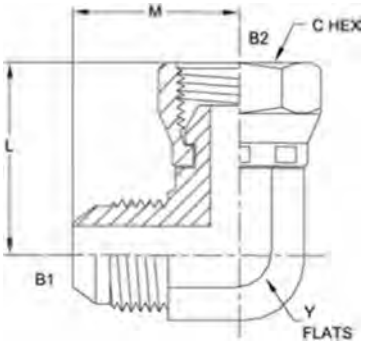

PART NO. SIZE	B1 JIC37	B2 BSPP	B1 DRILL	B2 DRILL	M LGTH	L LOTH	C HEX	Y FLATS
7204-06-06-FG	9/16-18	3/8-19	7.5	7.9	29.2	33.0	22.0	19.0
7204-08-08-FG	3/4-16	1/2-14	9.9	11.1	34.0	38.8	27.0	22.0
7204-12-12-FG	1-1/16-12	3/4-14	15.5	16.7	42.0	42.3	32.0	27.0

MJ-MMADJ 90° Elbow
7205-NWO Series

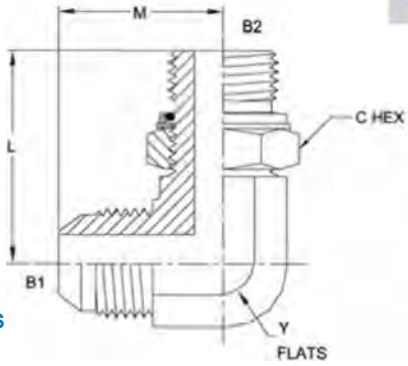

PART NO.SIZE	B1 JIC37	B2 MM	B1 DRILL	B2 DRILL	M LGTH	L LGTH	C HEX	V FLATS
7205-04-10-NWO-FG	7/16-20	MIOxl	4.4	4.5	22.5	25.4	14.0	12.0
7205-04-12-NWO-FG	7/16-20	M12 x 1.5	4.4	6.0	26.7	28.5	17.0	14.0
7205-04-14-NWO-FG	7/16-20	M14 x 1.5	4.4	7.5	26.7	32.5	19.0	14.0
7205-05-10-NWO-FG	1/2-20	MIOxl	6.0	4.5	24.0	25.4	14.0	14.0
7205-05-12-NWO-FG	1/2-20	M12 x 1.5	6.0	6.0	24.0	28.5	17.0	14.0
7205-06-14-NWO-FG	9/16-18	M14 x 1.5	7.5	7.5	27.0	32.5	19.0	14.0
7205-06-16-NWO-FG	9/16-18	M16 x 1.5	7.5	9.0	29.2	36.4	22.0	19.0
7205-08-16-NWO-FG	3/4-16	M16x 1.5	9.9	9.0	32.0	36.4	22.0	19.0
7205-08-18-NWO-FG	3/4-16	M18 x 1.5	9.9	11.0	32.0	36.8	24.0	19.0
7205-08-22-NWO-FG	3/4-16	M22 x 1.5	9.9	14.0	34.0	42.5	27.0	22.0
7205-10-18-NWO-FG	7/8-14	M18 x 1.5	12.3	11.0	37.0	41.0	24.0	22.0
7205-10-20-NWO-FG	7/8-14	M20 x 1.5	12.3	10.0	37.0	41.5	27.0	22.0
7205-10-22-NWO-FG	7/8-14	M22 x 1.5	12.3	14.0	37.0	42.5	27.0	22.0
7205-12-22-NWO-FG	1-1/16-12	M22 x 1.5	15.5	14.0	42.0	44.0	27.0	27.0
7205-12-26-NWO-FG	1-1/16-12	M26 x 1.5	15.5	18.0	42.0	50.0	32.0	27.0
7205-12-27-NWO-FG	1-1/16-12	M27 x 2	15.5	18.0	42.0	50.0	32.0	27.0
7205-12-33-NWO-FG	1-1/16-12	M33 x 2	15.5	23.0	44.7	53.0	41.0	33.0
7205-16-27-NWO-FG	1-5/16-12	M27 x 2	21.5	18.0	46.0	53.0	32.0	33.0
7205-16-33-NWO-FG	1-5/16-12	M33 x 2	21.5	23.0	46.0	53.0	41.0	33.0

FJS-MBSPT 90° Elbow
7220 Series

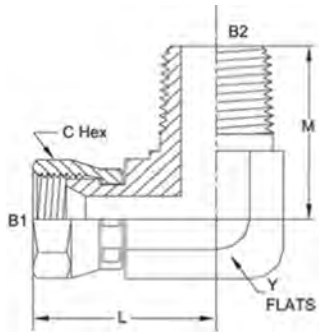

PART NO.SIZE	B1 JIC37	B2 BSPT	B1 DRILL	B2 DRILL	L LGTH	M LGTH	C HEX	Y FLATS
7220-06-08-FG	9/16-18	1/2-14	7.5	13.5	31.8	37.0	19.0	22.0

FJS-MBSPP 90° Elbow
7222 Series

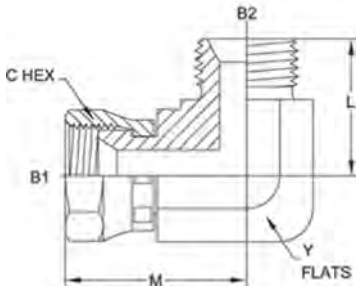

PART NO.SIZE	B1 JIC37	B2 BSPP	B1 DRILL	B2 DRII	M LGTH	L LGTH	C HEX	Y FLATS
7222-04-04-FG	7/16-20	1/4-19	4.4	4.7	29.1	27.8	14.0	14.0
7222-06-06-FG	9/16-18	3/8-19	7.5	7.9	32.6	31.7	19.0	19.0
7222-06-08-FG	9/16-18	1/2-14	7.5	11.1	35.9	37.0	19.0	22.0
7222-08-06-FG	3/4-16	3/8-19	9.9	7.9	35.1	31.7	22.0	19.0
7222-08-08-FG	3/4-16	1/2-14	9.9	11.1	38.4	37.0	22.0	22.0
7222-10-08-FG	7/8-14	1/2-14	12.3	11.1	41.1	37.0	27.0	22.0
7222-12-12-FG	1-1/16-12	3/4-14	15.5	16.7	44.4	41.6	32.0	27.0

International Fittings

MJIS Plug
7588-P Series

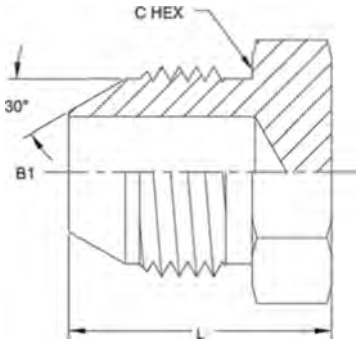

PART NO.SIZE	B1 JIS BSPP	L LGTH	C HEX
7588-P-02	1/8-28	20.0	14.0
7588-P-04	1/4-19	24.0	17.0
7588-P-06	3/8-19	26.0	19.0
7588-P-08	1/2-14	30.0	22.0
7588-P-12	3/4-14	34.0	30.0
7588-P-16	1-11	36.0	36.0

Komatsu MK Plug
7599-P Series

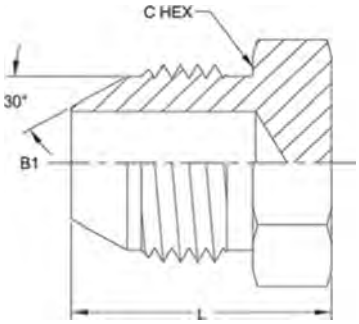

PART NO.SIZE	B1 M K	L LGTH	C HEX
7599-P-14	M14 x 1.5	23.4	17.0
7599-P-18	M18 x 1.5	25.1	22.0
7599-P-22	M22 x 1.5	28.7	24.0
7599-P-24	M24 x 1.5	32.0	27.0
7599-P-30	M30 x 1.5	36.6	32.0
7599-P-33	M33 x 1.5	40.6	38.0

FJIS Cap
7688-C Series

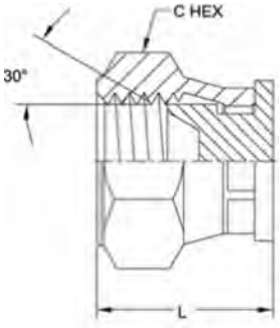

PART NO.SIZE	B1 JIS BSPP	I IGTH	C HEX
7688-C-02	1/8-28	17.90	14
7688-C-04	1/4-19	22.00	19
7688-C-06	3/8-19	22.40	22
7688-C-08	1/2-14	27.40	27
7688-C-12	3/4-14	31.50	32
7688-C-16	1-11	34.50	41

Komatsu FK Cap
7699-C Series

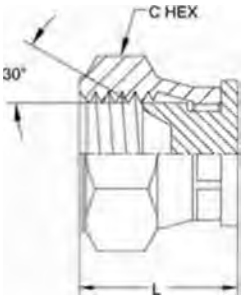

PART NO.SIZE	61 FK	I LGTH	C HEX
7699-C-14	M14x 1.5	20.0	19.0
7699-C-18	M18 x 1.5	23.8	24.0
7699-C-22	M22 x 1.5	28.1	27.0
7699-C-24	M24 x 1.5	31.8	32.0
7699-C-30	M30 x 1.5	29.9	36.0
7699-C-33	M33 x 1.5	39.9	41.0

International Fittings

Metric MM-MM Nipple
8055 Series

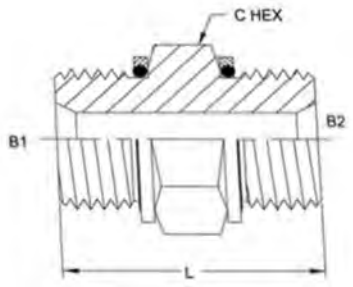

PART NO.SIZE	B1 MM	B2 MM	B1 DRILL	B2 DRILL	L LGTH	C HEX
8055-16-16	M16x 1.5	M16x 1.5	9.0	9.0	32.5	22.0
8055-18-18	M18x 1.5	M18 x 1.5	11.0	11.0	32.5	24.0
8055-20-20	M20 x 1.5	M20 x 1.5	12.5	12.5	35.0	27.0

MJIS-MBSPT Union
8080 Series

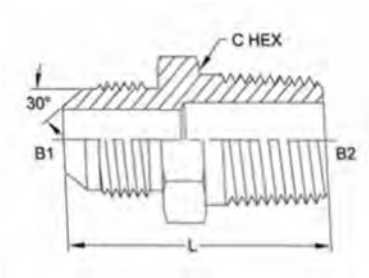

PART NO.SIZE	B1 JIS BSPP	B2 BSPT	B1 DRILL	B2 DRILL	L LGTH	C HEX
8080-04-04	1/4-19	1/4-19	5.0	7.0	38.7	17.0
8080-04-06	1/4-19	3/8-19	5.0	10.3	37.1	19.0
8080-06-04	3/8-19	1/4-19	8.0	7.0	40.7	19.0
8080-06-06	3/8-19	3/8-19	8.0	10.3	40.7	19.0
8080-08-06	1/2-14	3/8-19	11.0	10.3	44.7	22.0
8080-08-08	1/2-14	1/2-14	11.0	13.5	49.5	22.0
8080-12-12	3/4-14	3/4-14	16.0	18.0	53.5	30.0
8080-16-16	1-11	1-11	22.0	23.8	60.4	36.0

MJIS-MJIS Union
8088 Series

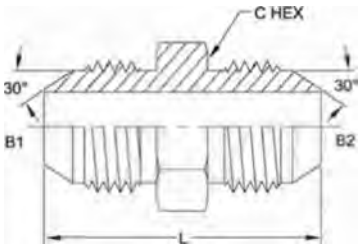

PART NO.SIZE	B1 JISBSPP	B2 JIS BSPP	B1 DRILL	B2 DRILL	L LETH	C HEX
8088-04-04	1/4-19	1/4-19	5.0	5.0	40.0	17.0
8088-06-06	3/8-19	3/8-19	8.0	8.0	44.0	19.0
8088-08-08	1/2-14	1/2-14	11.0	11.0	50.0	22.0
8088-12-12	3/4-14	3/4-14	16.0	16.0	56.0	30.0

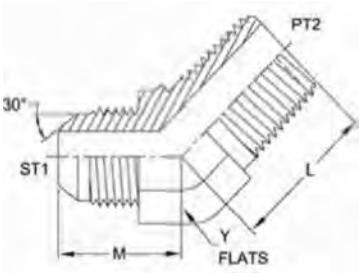

PART NO.SIZE	ST1 JIS BSPP	PT2 BSPT	ST1 DRILL	PT2 DRILL	M LETH	I LETH	Y FIATS
8180-04-04	1/4-19	1/4-19	5.0	7.0	22.0	19.0	17.0
8180-06-06	3/8-19	3/8-19	8.0	10.3	25.0	22.0	19.0
8180-08-08	1/2-14	1/2-14	11.0	13.5	28.0	26.0	24.0
8180-12-12	3/4-14	3/4-14	16.0	18.0	32.0	30.0	30.0
8180-16-16	1-11	1-11	22.0	23.8	36.0	34.0	36.0

MJIS-MBSPT 90° Elbow
8280 Series

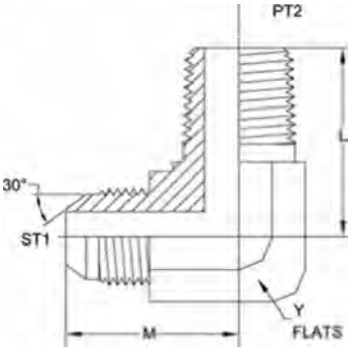

PART NO.SIZE	ST1 JIS BSPP	PT2 BSPT	ST1 DRILL	PT2 DRILL	M LETH	L LETH	Y FLATS
8280-04-04	1/4-19	1/4-19	5.0	7.0	25.0	26.0	17.0
8280-06-06	3/8-19	3/8-19	8.0	10.3	28.0	30.0	19.0
8280-08-08	1/2-14	1/2-14	11.0	13.5	32.0	36.0	24.0
8280-12-12	3/4-14	3/4-14	16.0	18.0	37.0	43.0	30.0
8280-16-16	1-11	1-11	22.0	23.8	42.0	50.0	36.0

International Fittings

Metric MM Hollow Hex Plug
8555-H Series

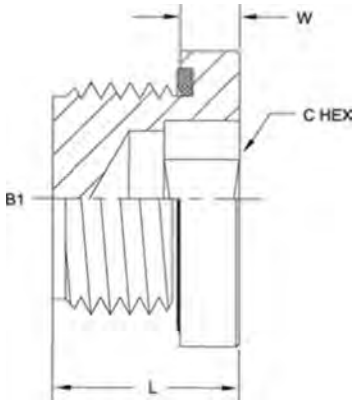

8555-H08-O	M08X1.5	12.3	4.3	5.0
8555-HIO-O	M10X 1.5	12.3	4.3	5.0
8555-HI 2-0	M12X1.5	17.3	5.3	6.0
8555-H14-0	MMX 1.5	17.3	5.3	6.0
8555-H16-0	M16X1.5	17.3	5.3	8.0
8555-H18-0	M18X1.5	17.3	5.3	8.0
8555-H20-O	M20X1.5	19.3	5.3	10.0
8555-H22-0	M22X 1.5	19.3	5.3	10.0
8555-H24-0	M24X1.5	19.3	5.3	10.0
8555-H26-0	M26X1.5	21.3	5.3	12.0
8555-H27-0	M27X2	21.3	5.3	12.0
8555-H33-0	M33X2	22.8	6.8	17.0
8555-H42-0	M42X2	22.8	6.8	22.0

Metric MM Plug 1.5 Pitch
8555-P Series

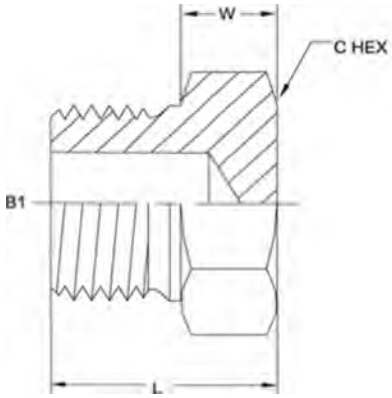

PART NO.SIZE	B1 MM	L LGTH	W WIDTH	C HEX
8555-PI 0-0	M10X1	12.0	4.0	14.0
8555-PI 2-0	M12X1.5	16.7	7.0	17.0
8555-PI 4-0	M14X1.5	17.4	8.0	19.0
8555-PI 6-0	M16X1.5	16.4	8.0	22.0
8555-PI 8-0	M18X1.5	17.1	8.0	24.0
8555-P20-O	M20X 1.5	16.8	8.0	27.0
8555-P24-0	M24X1.5	17.6	8.0	33.0
8555-P26-0	M26X1.5	17.6	8.0	33.0
8555-P36-0	M36X1.5	19.6	8.0	46.0

International Fittings

Metric Bonded Seal
8800 Series

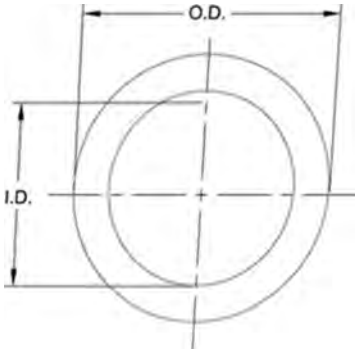

PART NO.SIZE	I.D. MM	O.D. LGTH
8800-06	6	10
8800-08	8	13
8800-10	10	18
8800-12	12	20
8800-14	14	22
8800-16	16	24
8800-18	18	26
8800-20	20	28
8800-22	22	30
8800-23	23	31
8800-24	24	32
8800-26	26	35
8800-27	27	36
8800-30	30	39
8800-33	33	43
8800-36	36	46
8800-42	42	53
8800-45	45	56
8800-52	52	64

For metric threads

MBSPT-MBSPT Nipple
9000 Series

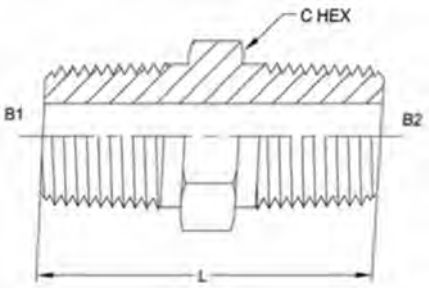

PART NO.SIZE	B1 BSPT	B2 BSPT	B1 DRILL	B2 DRILL	L LGTH	C HEX
9000-02-02	1/8-28	1/8-28	4.8	4.8	26.0	11.0
9000-04-02	1/4-19	1/8-28	7.0	4.8	31.3	14.0
9000-04-04	1/4-19	1/4-19	7.0	7.0	35.8	14.0
9000-06-02	3/8-19	1/8-28	10.3	4.8	31.3	19.0
9000-06-04	3/8-19	1/4-19	10.3	7.0	35.8	19.0
9000-06-06	3/8-19	3/8-19	10.3	10.3	35.8	19.0
9000-08-04	1/2-14	1/4-19	13.5	7.0	42.1	22.0
9000-08-06	1/2-14	3/8-19	13.5	10.3	42.1	22.0
9000-08-08	1/2-14	1/2-14	13.5	13.5	46.9	22.0
9000-10-10	5/8-14	5/8-14	15.0	15.0	53.7	26.0
9000-12-08	3/4-14	1/2-14	18.0	13.5	48.7	27.0
9000-12-12	3/4-14	3/4-14	18.0	18.0	48.7	27.0
9000-16-12	1-11	3/4-14	23.8	18.0	53.6	36.0
9000-16-16	1-11	1-11	23.8	23.8	58.5	36.0
9000-20-20	1-1/4-11	1-1/4-11	31.7	31.7	61.9	42.0
9000-24-24	1-1/2-11	1-1/2-11	38.0	38.0	65.3	50.0
9000-32-32	2-11	2-11	49.0	49.0	70.7	65.0

International Fittings

MBSPT-FBSPT Bushing
9001 Series

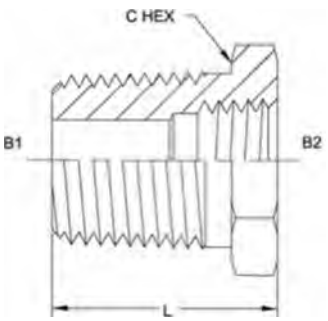

PART NO.SIZE	81 BSPT	B2 BSPT	L LGTH	C HEX
9001-04-02	1/4-19	1/8-28	23.8	14.0
9001-06-02	3/8-19	1/8-28	25.8	19.0
9001-06-04	3/8-19	1/4-19	25.8	19.0
9001-08-04	1/2-14	1/4-19	28.0	22.0
9001-08-06	1/2-14	3/8-19	28.0	22.0
9001-12-06	3/4-14	3/8-19	31.0	27.0
9001-12-08	3/4-14	1/2-14	31.0	27.0
9001-16-12	1-11	3/4-14	34.5	36.0
9001-20-16	1-1/4-11	1-11	40.6	42.0

MBSPT-FBSPT 90° Elbow
9002 Series

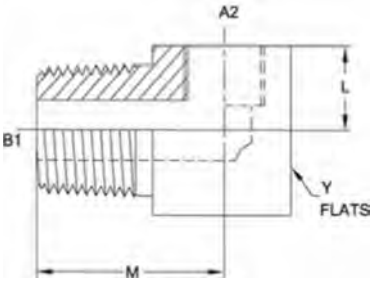

PART NO.SIZE	B1 BSPT	B2 BSPT	I LGTH	M LGTH	Y FLATS
9002-02-02	1/8-28	1/8-28	8.0	19.0	17.5
9002-04-04	1/4-19	1/4-19	15.0	24.5	19.0

MBSPP-MBSPT Straight
9020 Series

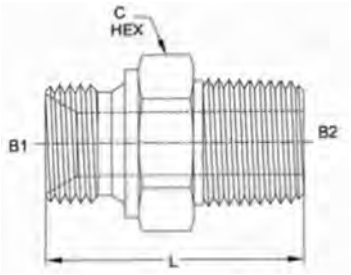

PART NO.SIZE	81 BSPP	B2 BSPT	B1 ORILL	B2 DRILL	L LGTH	C HEX
9020-04-02	1/4-19	1/8-28	4.7	4.8	28.2	19.0
9020-04-04	1/4-19	1/4-19	4.7	7.0	32.7	19.0
9020-04-06	1/4-19	3/8-19	4.7	10.3	32.7	19.0
9020-06-04	3/8-19	1/4-19	7.9	7.0	34.7	22.0
9020-06-06	3/8-19	3/8-19	7.9	10.3	34.7	22.0
9020-08-04	1/2-14	1/4-19	11.1	7.0	38.7	27.0
9020-08-08	1/2-14	1/2-14	11.1	13.5	43.5	27.0
9020-12-12	3/4-14	3/4-14	16.7	18.0	47.5	32.0
9020-16-16	1-11	1-11	22.2	23.8	58.4	41.0
9020-20-20	1-1/4-11	1-1/4-11	28.6	31.7	64.1	50.0
9020-24-24	1-1/2-11	1-1/2-11	33.3	38.0	70.9	55.0
9020-32-32	2-11	2-11	46.0	49.0	80.7	70.0

MBSPP-MBSPP Nipple
9022 Series

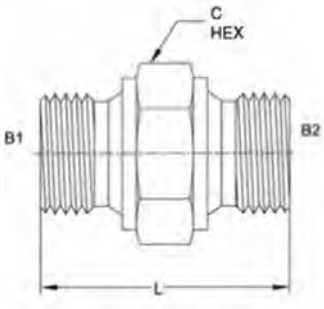

PART NO.SIZE	B1 BSPP	B2 BSPP	B1 DRILL	B2 DRILL	L LGTH	C HEX
9022-02-02	1/8-28	1/8-28	3.5	3.5	21.0	14.0
9022-04-02	1/4-19	1/8-28	4.7	3.5	26.0	19.0
9022-04-04	1/4-19	1/4-19	4.7	4.7	29.0	19.0
9022-06-02	3/8-19	1/8-28	7.9	3.5	28.0	22.0
9022-06-04	3/8-19	1/4-19	7.9	4.7	31.0	22.0
9022-06-06	3/8-19	3/8-19	7.9	7.9	32.0	22.0
9022-08-02	1/2-14	1/8-28	11.1	3.5	32.0	27.0
9022-08-04	1/2-14	1/4-19	11.1	4.7	35.0	27.0
9022-08-06	1/2-14	3/8-19	11.1	7.9	36.0	27.0
9022-08-08	1/2-14	1/2-14	11.1	11.1	38.0	27.0
9022-10-04	5/8-14	1/4-19	14.3	4.7	39.0	30.0
9022-10-06	5/8-14	3/8-19	14.3	7.9	40.0	30.0
9022-10-08	5/8-14	1/2-14	14.3	11.1	42.0	30.0
9022-10-10	5/8-14	5/8-14	14.3	14.3	44.0	30.0
9022-12-06	3/4-14	3/8-19	16.7	7.9	40.0	32.0
9022-12-08	3/4-14	1/2-14	16.7	11.1	42.0	32.0
9022-12-10	3/4-14	5/8-14	16.7	14.3	44.0	32.0
9022-12-12	3/4-14	3/4-14	16.7	16.7	44.0	32.0
9022-16-08	1-11	1/2-14	22.2	11.1	48.0	41.0
9022-16-10	1-11	5/8-14	22.2	14.3	50.0	41.0
9022-16-12	1-11	3/4-14	22.2	16.7	50.0	41.0
9022-16-16	1-11	1-11	22.2	22.2	53.0	41.0
9022-20-16	1-1/4-11	1-11	28.6	22.2	58.0	50.0
9022-20-12	1-1/4-11	3/4-14	28.6	16.7	55.0	50.0
9022-20-16	1-1/4-11	1-11	28.6	22.2	58.0	50.0
9022-20-20	1-1/4-11	1-1/4-11	28.6	28.6	59.0	50.0
9022-24-16	1-1/2-11	1-11	33.3	22.2	64.0	55.0
9022-24-20	1-1/2-11	1-1/4-11	33.3	28.6	65.0	55.0
9022-24-24	1-1/2-11	1-1/2-11	33.3	33.3	67.0	55.0
9022-32-16	2-11	1-11	46.0	22.2	73.0	70.0
9022-32-20	2-11	1-1/4-11	46.0	28.6	74.0	70.0
9022-32-24	2-11	1-1/2-11	46.0	33.3	76.0	70.0
9022-32-32	2-11	2-11	46.0	46.0	79.0	70.0

International Fittings

MBSPP-FBSPP
9023 Series

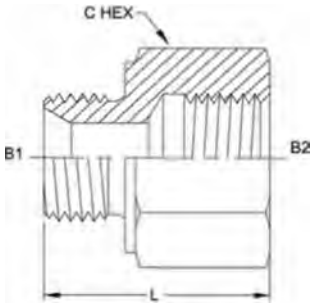

PART NO.SIZE	B1 BSPP	B2 BSPP	B1 DRILL	L LGTH	C HEX
9023-04-02	1/4-19	11/8-28	4.7	18.0	19.0
9023-04-04	1/4-19	1/4-19	4.7	18.0	19.0
9023-04-06	1/4-19	3/8-19	4.7	32.0	22.0
9023-06-02	3/8-19	1/8-28	7.9	20.0	22.0
9023-06-04	3/8-19	1/4-19	7.9	20.0	22.0
9023-06-06	3/8-19	3/8-19	7.9	20.0	22.0
9023-06-08	3/8-19	1/2-14	7.9	35.0	27.0
9023-08-04	1/2-14	1/4-19	11.1	24.0	27.0
9023-08-06	1/2-14	3/8-19	11.1	24.0	27.0
9023-08-08	1/2-14	1/2-14	11.1	24.0	27.0
9023-08-12	1/2-14	3/4-14	11.1	42.0	32.0
9023-08-16	1/2-14	1-11	11.1	45.0	41.0
9023-12-04	3/4-14	1/4-19	16.7	28.0	32.0
9023-12-06	3/4-14	3/8-19	16.7	28.0	32.0
9023-12-08	3/4-14	1/2-14	16.7	28.0	32.0
9023-12-12	3/4-14	3/4-14	16.7	28.0	32.0
9023-12-16	3/4-14	1-11	16.7	47.0	41.0
9023-16-08	1-11	1/2-14	22.2	34.0	41.0
9023-16-12	1-11	3/4-14	22.2	34.0	41.0
9023-16-20	1-11	1-1/4-11	22.2	55.0	50.0
9023-20-12	1-1/4-11	3/4-14	28.6	39.0	50.0
9023-20-16	1-1/4-11	1-11	28.6	39.0	50.0
9023-24-16	1-1/2-11	1-11	33.3	45.0	55.0
9023-24-20	1-1/2-11	1-1/4-11	33.3	45.0	55.0
9023-32-16	2-11	1-11	46.0	54.0	70.0

MBSPP-FBSPPS
9024 Series

PART NO.SIZE	B1 BSPP	B2 BSPP	B1 DRILL	62 ORILL	L LGTH	CI HEX	C2 HEX
9024-02-02	1/8-28	1/8-28	3.5	3.5	29.0	14.0	3.5
9024-04-02	1/4-19	1/8-28	4.7	3.5	34.0	19.0	3.5
9024-04-04	1/4-19	1/4-19	4.7	4.7	35.0	19.0	4.7
9024-04-06	1/4-19	3/8-19	4.7	7.9	37.0	19.0	7.9
9024-06-04	3/8-19	1/4-19	7.9	4.7	37.0	22.0	4.7
9024-06-06	3/8-19	3/8-19	7.9	7.9	39.0	22.0	7.9
9024-08-06	1/2-14	3/8-19	11.1	7.9	43.0	27.0	7.9
9024-08-08	1/2-14	1/2-14	11.1	11.1	46.0	27.0	11.1
9024-08-12	1/2-14	3/4-14	11.1	16.7	49.0	27.0	16.7
9024-08-16	1/2-14	1-11	11.1	22.2	61.0	33.0	22.2
9024-10-10	5/8-14	5/8-14	14.3	14.3	53.0	30.0	14.3
9024-12-08	3/4-14	1/2-14	16.7	11.1	50.0	32.0	11.1
9024-12-12	3/4-14	3/4-14	16.7	16.7	53.0	32.0	16.7
9024-12-16	3/4-14	1-11	16.7	22.2	63.0	33.0	22.2
9024-16-16	1-11	1-11	22.2	22.2	66.0	41.0	22.2
9024-16-20	1-11	1-1/4-11	22.2	28.6	67.0	41.0	28.6
9024-20-20	1-1/4-11	1-1/4-11	28.6	28.6	72.0	50.0	28.6
9024-24-24	1-1/2-11	1-1/2-11	33.3	33.3	82.0	55.0	33.3

Metric MBSPP-MM Nipple
9025 Series

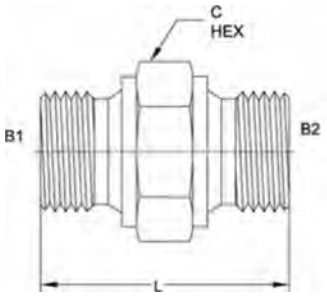

PART NO.SIZE	B1 BSPP	B2 MM	B1 DRILL	B2 DRILL	L LCTH	C HEX
9025-04-14	1/4-19	M14x 1.5	4.7	7.5	30.0	19.0
9025-04-18	1/4-19	M18x 1.5	4.7	11.0	31.5	24.0
9025-06-12	3/8-19	M12x 1.5	7.9	6.0	32.0	22.0
9025-06-16	3/8-19	M16x 1.5	7.9	9.0	32.0	22.0
9025-06-18	3/8-19	M18x 1.5	7.9	11.0	32.5	24.0
9025-06-20	3/8-19	M20x 1.5	7.9	12.5	33.0	27.0
9025-06-24	3/8-19	M24x 1.5	7.9	15.5	37.5	32.0
9025-08-18	1/2-14	M18x 1.5	11.1	11.0	36.0	27.0
9025-12-18	3/4-14	M18x 1.5	16.7	11.0	40.0	32.0
9025-12-20	3/4-14	M20 x 1.5	16.7	12.5	42.0	32.0
9025-12-22	3/4-14	M22x 1.5	16.7	14.0	42.0	32.0
9025-12-26	3/4-14	M26x 1.5	16.7	18.0	44.0	32.0
9025-12-30	3/4-14	M30 x 2	16.7	21.0	46.0	36.0

FBSPP-FBSPP Coupling
9033 Series

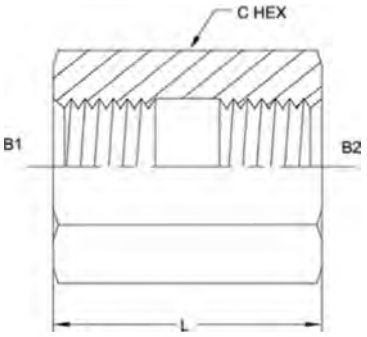

PART NO.SIZE	B1 BSPP	B2 BSPP	L LGTH	C HEX
9033-02-02	1/8-28	1/8-28	19.0	14.0
9033-04-02	1/4-19	1/8-28	28.7	19.0
9033-04-04	1/4-19	1/4-19	28.7	19.0
9033-06-04	3/8-19	1/4-19	28.7	22.0
9033-06-06	3/8-19	3/8-19	28.7	22.0
9033-08-06	1/2-14	3/8-19	38.1	27.0
9033-08-08	1/2-14	1/2-14	38.1	27.0
9033-10-08	5/8-14	1/2-14	38.2	30.0
9033-10-10	5/8-14	5/8-14	38.2	30.0
9033-12-08	3/4-14	1/2-14	38.9	32.0
9033-12-12	3/4-14	3/4-14	38.9	32.0
9033-16-12	1-11	3/4-14	48.0	41.0
9033-16-16	1-11	1-11	48.0	41.0
9033-20-20	1-1/4-11	1-1/4-11	49.0	50.0
9033-24-24	1-1/2-11	1-1/2-11	49.0	55.0
9033-32-32	2-11	2-11	49.8	70.0

International Fittings

MBSPP-FBSPPS
Swept 45°
9124 Series

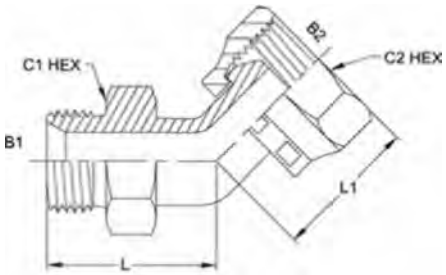

PART NO.SIZE	B1 BSPP	B2 BSPP	B1 DRILL	B2 DRILL	L LGTH	LI LETH	CI HEX	C2 HEX
9124-04-04	1/4-19	1/4-19	4.7	4.7			19.0	19.0
9124-06-06	3/8-19	3/8-19	7.9	7.9			22.0	22.0
9124-08-08	1/2-14	1/2-14	11.1	11.1	38.0	40.0	27.0	27.0

MBSPP-MBSPP 90
9222 Series

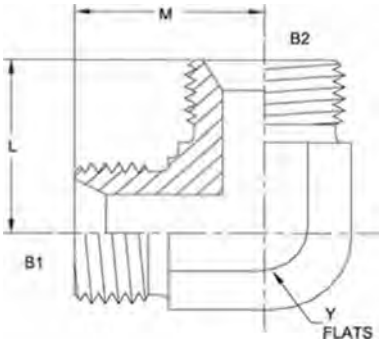

PART ND.SIZE	B1 BSPP	B2 BSPP	B1 DRILL	B2 DRILL	L LGTH	M LGTH	Y FLATS
9222-04-04-FG	1/4-19	1/4-19	4.7	4.7	27.8	27.8	14.0
9222-06-06-FG	3/8-19	3/8-19	7.9	7.9	31.7	31.7	19.0
9222-08-08-FG	1/2-14	1/2-14	11.1	11.1	37.0	37.0	22.0
9222-12-12-FG	3/4-14	3/4-14	16.7	16.7	41.6	41.6	27.0
9222-16-16-FG	1-11	1-11	22.2	22.2	49.7	49.7	33.0

MBSPP-FBSPPS 90°
9224 Series

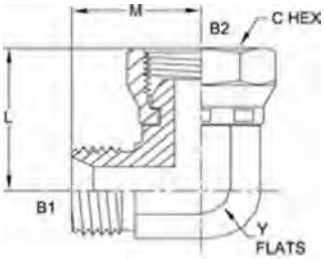

PART NO. SIZE	B1 BSPP	B2 BSPP	B1 DRILL	B2 DRILL	M LETH	I LGTH	C HEX	Y FLATS
9224-02-02-FG	1/8-28	1/8-28	3.5	3.5	16.6	22.0	14.0	11.0
9224-04-04-FG	1/4-19	1/4-19	4.7	4.7	27.8	31.2	19.0	14.0
9224-06-06-FG	3/8-19	3/8-19	7.9	7.9	31.7	36.2	22.0	19.0
9224-08-08-FG	1/2-14	1/2-14	11.1	11.1	37.0	41.0	27.0	22.0
9224-12-12-FG	3/4-14	3/4-14	16.7	16.7	41.6	45.3	32.0	27.0
9224-16-16-FG	1-11	1-11	22.2	22.2	49.7	53.9	41.0	33.0
9224-20-20-FG	1-1/4-11	1-1/4-11	28.6	28.6	54.4	60.0	50.0	41.0
9224-24-24-FG	1-1/2-11	1-1/2-11	33.3	33.3	53.7	63.3	55.0	48.0

MBSPP-FBSPPS
90° Long
9224-L Series

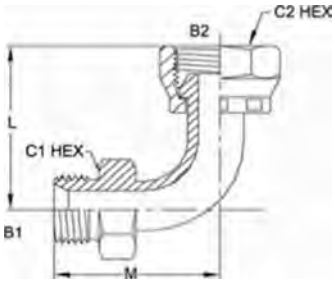

PART NO. SIZE	B1 BSPP	B2 BSPP	B1 DRILL	B2 DRILL	L LETH	M LGTH	CI HEX	C2 HEX
9224-L-06-06	3/8-19	3/8-19	7.9	7.9			22.0	22.0
9224-L-08-08	1/2-14	1/2-14	11.1	11.1	50.0	53.5	27.0	27.0
9224-L-12-12	3/4-14	3/4-14	16.7	16.7			32.0	32.0
9224-L-16-16	1-11	1-11	22.2	22.2	75.0	72.0	41.0	41.0
9224-L-24-24	1-1/2-11	1-1/2-11	33.3	33.3	104.0	100.0	55.0	55.0

International Fittings

MBSPP-MBSPP-MBSPP Tee
9322 Series

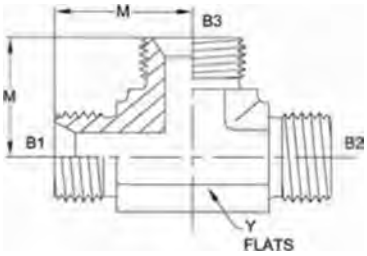

PART NO. SIZE	B1 BSPP	B2 BSPP	B3 BSPP	M LOTH	Y FLATS
9322-04-04-04-FG	1/4-19	1/4-19	1/4-19	27.8	14.0
9322-06-06-06-FG	3/8-19	3/8-19	3/8-19	31.7	19.0
9322-08-08-08-FG	1/2-14	1/2-14	1/2-14	37.0	22.0
9322-12-12-12-FG	3/4-14	3/4-14	3/4-14	41.6	27.0
9322-16-16-16-FG	1-11	1-11	1-11	49.7	33.0
9322-20-20-20-FG	1-1/4-11	1-1/4-11	1-1/4-11	54.4	41.0

FBSPP-FBSPP-FBSPP Tee
9344 Series

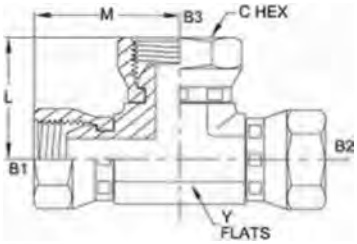

PART NO. SIZE	B1 BSPP	B2 BSPP	B2 BSPP	L LGTH	M LGTH	C HEX	Y FLATS
9344-02-02-02-FG	1/8-28	1/8-28	1/8-28	21.0	21.0	14.0	11.0
9344-04-04-04-FG	1/4-19	1/4-19	1/4-19	30.5	30.5	19.0	14.0
9344-06-06-06-FG	3/8-19	3/8-19	3/8-19	33.0	33.0	22.0	19.0
9344-08-08-08-FG	1/2-14	1/2-14	1/2-14	38.8	38.8	27.0	22.0
9344-12-12-12-FG	3/4-14	3/4-14	3/4-14	42.3	42.3	32.0	27.0
9344-16-16-16-FG	1-11	1-11	1-11	49.0	49.0	41.0	33.0

MBSPT Plug
9500-P Series

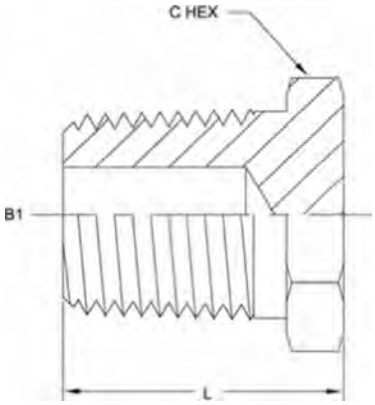

PART NO.SIZE	B1 BSPT	L LGTH	C HEX
9500-P-02	1/8-28	15.8	11.0
9500-P-04	1/4-19	21.1	14.0
9500-P-06	3/8-19	21.1	19.0
9500-P-08	1/2-14	27.4	22.0
9500-P-10	5/8-14	31.4	26.0
9500-P-12	3/4-14	29.2	27.0
9500-P-16	1-11	34.1	36.0
9500-P-20	1-1/4-11	36.8	42.0
9500-P-24	1-1/2-11	39.4	50.0
9500-P-32	2-11	44.0	65.0

MBSPP Hollow Hex Plug
9522-H Series

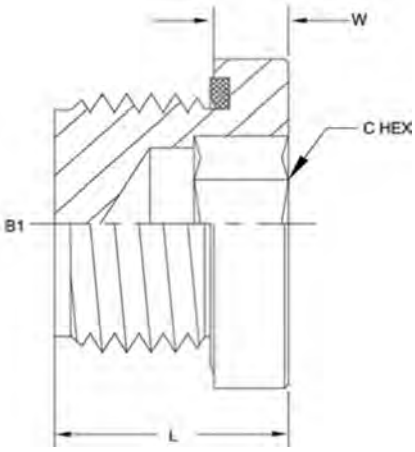

PART NO.SIZE	B1 BSPP	L LGTH	C HEX
9522-H-02-O	1/8-28	12.1	5.0
9522-H-04-O	1/4-19	16.6	6.0
9522-H-06-O	3/8-19	17.0	8.0
9522-H-08-O	1/2-14	19.0	10.0
9522-H-IO-O	5/8-14	21.2	12.0
9522-H-12-0	3/4-14	21.2	12.0
9522-H-16-0	1-11	22.5	17.0
9522-H-20-O	1-1/4-11	22.5	22.0

International Fittings

MBSPP Hex Plug
9522-P Series

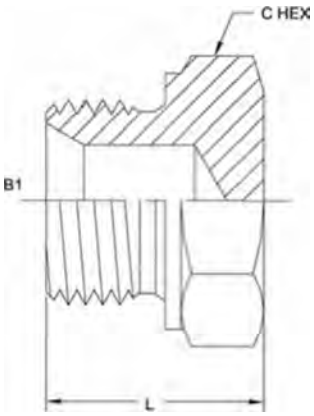

PART ND.SIZE	B1 BSPP	I LGTH	C HEX
9522-P-02	1/8-28	15.5	14.0
9522-P-04	1/4-19	17.0	19.0
9522-P-06	3/8-19	18.5	22.0
9522-P-08	1/2-14	20.0	27.0
9522-P-10	5/8-14	26.7	30.0
9522-P-12	3/4-14	26.7	32.0
9522-P-16	1-11	30.2	41.0
9522-P-20	1-1/4-11	38.7	50.0
9522-P-24	1-1/2-11	42.7	55.0
9522-P-32	2-11	48.2	70.0
9522-P-48	3-11	41.9	94.8

FBSPP Cap
9644-C Series

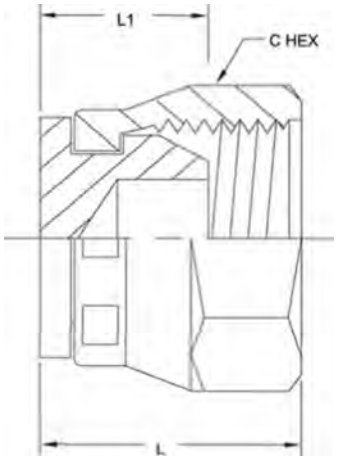

PART NO.SIZE	B1 BSPP	L LGTH	11 LGTH	C HEX
9644-C-02	1/8-28	16.0	11.9	14.0
9644-C-04	1/4-19	20.6	15.1	19.0
9644-C-06	3/8-19	22.3	15.8	22.0
9644-C-08	1/2-14	26.3	18.6	27.0
9644-C-10	5/8-14	26.6	17.1	30.0
9644-C-12	3/4-14	28.0	19.0	32.0
9644-C-16	1-11	33.6	20.5	41.0
9644-C-20	1-1/4-11	36.0	25.5	50.0
9644-C-24	1-1/2-11	38.0	24.6	55.0
9644-C-32	2-11	41.3	26.0	70.0

MBSPP-MBSPP Bulkhead
9722-LN Series

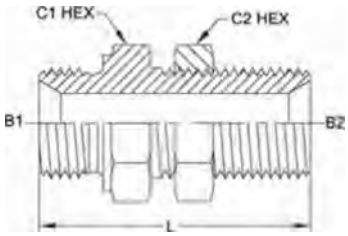

PART NO.SIZE	B1 BSPP	82 BSPP	B1 DRILL	B2 DRILL	L LGTH	CI HEX	C2 HEX
9722-04-04-LN	1/4-19	1/4-19	4.7	4.7	46.0	19.0	19.0
9722-04-06-LN	1/4-19	3/8-19	4.7	7.9	51.0	22.0	22.0
9722-06-06-LN	3/8-19	3/8-19	7.9	7.9	52.0	22.0	22.0
9722-06-08-LN	3/8-19	1/2-14	7.9	11.1	57.0	27.0	27.0
9722-08-08-LN	1/2-14	1/2-14	11.1	11.1	59.0	27.0	27.0
9722-10-10-LN	5/8-14	5/8-14	14.3	14.3	63.0	30.0	30.0
9722-12-12-LN	3/4-14	3/4-14	16.7	16.7	66.0	32.0	32.0
9722-16-16-LN	1-11	1-11	22.2	22.2	75.0	41.0	41.0

British Bonded Seal
9900 Series

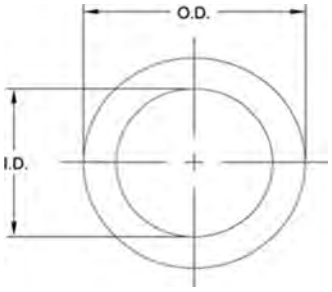

PART NO.SIZE	I.D.	O.D.
9900-02	0.408	0.625
9900-04	0.540	0.809
9900-06	0.682	0.937
9900-08	0.850	1.125
9900-10	0.925	1.250
9900-12	1.062	1.375
9900-16	1.338	1.687
9900-20	1.699	2.063
9900-24	1.910	2.310
9900-32	2.389	2.875

BSPP Locknut
9925 Series

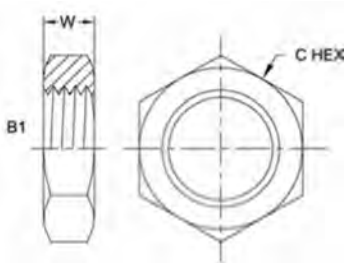

PART NO.SIZE	B1 BSPP	W WIDTH	C HEX
9925-04	1/4-19	7.1	19.00
9925-06	3/8-19	7.1	22.00
9925-08	1/2-14	8.6	27.00
9925-10	5/8-14	8.6	30.00
9925-12	3/4-14	8.6	36.00
9925-16	1-11	11.9	41.00
9925-20	1-1/4-11	11.9	50.00
9925-24	1-1/2-11	11.9	55.00
9925-32	2-11	11.9	70.00

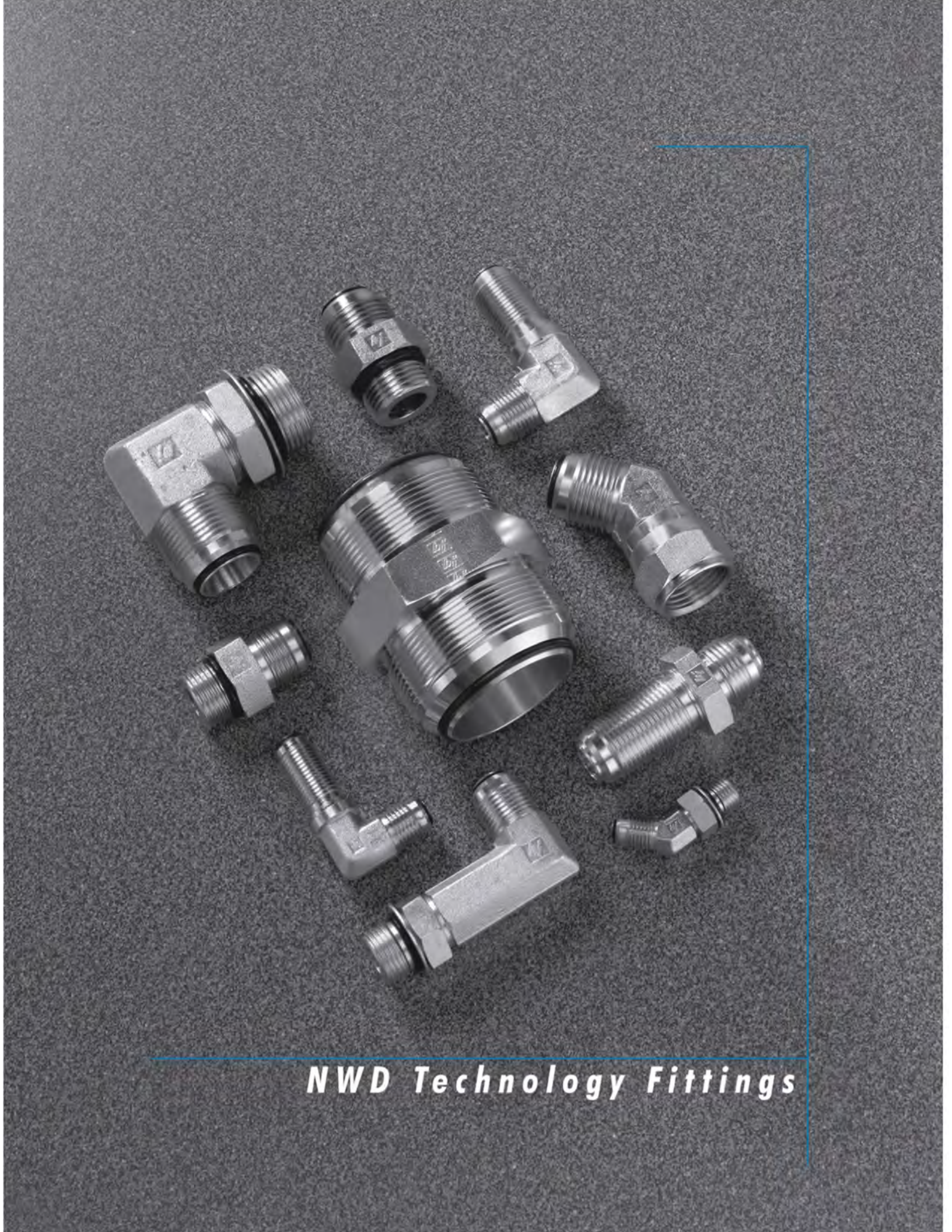

NWD Technology Fittings

NWD® Technology Fittings

Patented NWD® Technology is an innovative feature available on many of the hydraulic fittings and pressure connections available from Brennan. Products from Brennan that include this new technology are engineered with multiple seals to provide protection against leakage and "weeps." this unique, multiple-seal design incorporates metal-to-metal sealing, as well as an elastomeric seal. Each seal works independently of the other. Thus, in the unlikely event that one seal should fail, the other serves as a backup to stop leaks.

H-003 **F0403** Bore-FO Straight	H-003 **F0500** Bore-FO 90°	H-004 **F0600** Bore-Bore-FO	H-004 **F2403** FO-FO Straight	H-005 **F2403-LH** FO-FO Straight Large Hex	H-005 **F2404** FO-MP Straight
H-006 **F2405** FO-FP Straight	H-007 **F2406** FJ-FO Straight Reducer	H-008 **F2408** FO Plug	H-008 **F2500** FO-FO 90°	H-009 **F2501** FO-MP 90°	H-010 **F2501-L** FO-MP 90° Long
H-010 **F2501-LL** FO-MP 90° X-Long	H-011 **F2501-LLL** FO-MP 90° XX-Long	H-011 **F2502** FO-FP 90°	H-012 **F2503** FO-MP 45°	H-013 **F2601** FO-FO-MP Tee	H-013 **F2602** FO-FO-FP Tee
H-014 **F2603** FO-FO-FO Tee	H-014 **F2605** F0-MP-FO Tee	H-015 **F2606** FO-FP-FO Tee	H-015 **F2650** F0-FO-FO-FO Cross	H-016 **F2700** FO-FO Bulkhead Straight	H-016 **F2701** FO-FO Bulkhead 90°
H-017 **F2702** FO-FO Bulkhead 45°	H-017 **F2703** FO-FO-FO Bulkhead Branch Tee	H-018 **F2706** MP-FO Bulkhead Straight	H-018 **F4003** Flare-O Buna O-Ring	H-016 **F4004** Flare-O Viton O-Ring	H-019 **F6400-0** FO-MORB Straight
H-020 **F6400-L-0** FO-MORB Straight Long	H-020 **F6500** FO-FJS 90°	H-021 **F6502** FO-FJS 45°	H-021 **F6600** FO-FO-FJS Tee	H-022 **F6602** FO-FJS-FO Tee	H-023 **F6801-NWO** FO-MAORB 90°

NWD Technology Fittings

H-024	H-024	H-025	H-025	H-025	
F6801-L-NWD FO-MAORB 90° Long	**F6801-LL-NWD** FO-MAORB 90° X-Long	**F6802-NWD** FO-MAORB 45°	**F6803-NWD** FO-FO-MAORB Branch Tee	**F6804-NWD** FO-MAORB-FO Run Tee	

Bore-FO Straight
F0403 Series

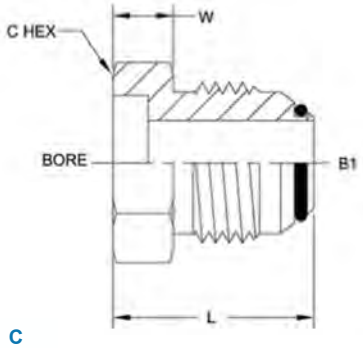

PART NO.SIZE	TUBE O.D.	B1 THREAD	BORE	B1 DRILL	L LGTH	W WIDTH	C HEX
F0403-04-04-0	1/4	7/16-20	0.256	0.172	0.796	0.220	0.500
F0403-06-06-0	3/8	9/16-18	0.381	0.297	0.843	0.250	0.625
F0403-08-08-0	1/2	3/4-16	0.506	0.391	0.937	0.250	0.812
F0403-10-10-0	5/8	7/8-14	0.631	0.484	1.093	0.310	0.937
F0403-12-12-0	3/4	1-1/16-12	0.757	0.609	1.281	0.380	1.250
F0403-14-14-0	7/8	1-3/16-12	0.882	0.719	1.312	0.380	1.375
F0403-16-16-0	1	1-5/16-12	1.007	0.844	1.328	0.380	1.375
F0403-20-20-0	1-1/4	1-5/8-12	1.258	1.078	1.453	0.460	1.688
F0403-24-24-O	1-1/2	1-7/8-12	1.508	1.312	1.656	0.530	2.000
F0403-32-32-O	2	2-1/2-12	2.008	1.781	2.046	0.680	2.625

Bore-FO 90°
F0500 Series

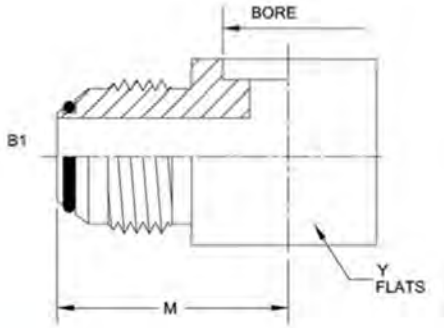

PART NO.SIZE	TUBE O.D.	BORE	B1 THREAD	B1 DRILL	M LGTH	Y FLATS
F0500-04-04-0	1/4	0.256	7/16-20	0.172	0.890	0.500
F0500-05-05-0	5/16	0.319	1/2-20	0.234	0.953	0.562
F0500-06-06-0	3/8	0.381	9/16-18	0.297	1.062	0.625
F0500-08-08-0	1/2	0.506	3/4-16	0.391	1.250	0.812
F0500-10-10-0	5/8	0.631	7/8-14	0.484	1.453	0.937
F0500-12-12-0	3/4	0.757	1-1/16-12	0.609	1.656	1.125
F0500-14-14-0	7/8	0.882	1-3/16-12	0.719	1.734	1.250
F0500-16-16-0	1	1.007	1-5/16-12	0.844	1.812	1.375
F0500-20-20-0	1-1/4	1.258	1-5/8-12	1.078	2.062	1.750
F0500-24-24-0	1-1/2	1.508	1-7/8-12	1.312	2.328	2.000
F0500-32-32-0	2	2.008	2-1/2-12	1.781	3.062	2.625

NWD Technology Fittings

Bore-Bore-FO
F0600 Series

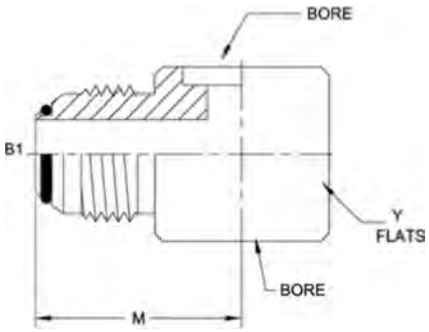

PART NO.SIZE	TUBE O.D.	BORE	B1 THREAD	B1 DRILL	M LBTH	Y FLATS
F0600-04-04-04-0	1/4	0.256	7/16-20	0.172	0.890	0.500
F0600-05-05-05-0	5/16	0.319	1/2-20	0.234	0.953	0.562
F0600-06-06-06-0	3/8	0.381	9/16-18	0.297	1.062	0.625
F0600-08-08-08-0	1/2	0.506	3/4-16	0.391	1.250	0.812
F0600-10-10-10-0	5/8	0.631	7/8-14	0.484	1.453	0.937
F0600-12-12-12-0	3/4	0.757	1-1/16-12	0.609	1.656	1.125
F0600-14-14-14-0	7/8	0.882	1-3/16-12	0.719	1.734	1.250
F0600-16-16-16-0	1	1.007	1-5/16-12	0.844	1.812	1.375
F0600-20-20-20-0	1-1/4	1.258	1-5/8-12	1.078	2.062	1.750
F0600-24-24-24-0	1-1/2	1.508	1-7/8-12	1.312	2.328	2.000

H-004

FO-FO Straight
F2403 Series

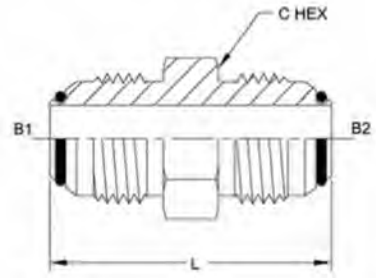

PART NO.SIZE	B1 TUBE O.D.	B2 TUBE O.D.	B1 SAE37	B2 SAE37	B1 DRILL	B2 DRILL	L LGTH	C HEX
F2403-04-04-0	1/4	1/4	7/16-20	7/16-20	0.172	0.172	1.37	0.500
F2403-05-05-0	5/16	5/16	1/2-20	1/2-20	0.234	0.234	1.37	0.562
F2403-06-04-0	3/8	1/4	9/16-18	7/16-20	0.297	0.172	1.40	0.625
F2403-06-05-0	3/8	5/16	9/16-18	1/2-20	0.297	0.234	1.40	0.625
F2403-06-06-0	3/8	3/8	9/16-18	9/16-18	0.297	0.297	1.41	0.625
F2403-08-06-0	1/2	3/8	3/4-16	9/16-18	0.391	0.297	1.52	0.812
F2403-08-08-0	1/2	1/2	3/4-16	3/4-16	0.391	0.391	1.62	0.812
F2403-10-06-0	5/8	3/8	7/8-14	9/16-18	0.484	0.297	1.68	0.937
F2403-10-08-0	5/8	1/2	7/8-14	3/4-16	0.484	0.391	1.78	0.937
F2403-10-10-0	5/8	5/8	7/8-14	7/8-14	0.484	0.484	1.88	0.937
F2403-12-08-0	3/4	1/2	1-1/16-12	3/4-16	0.609	0.391	1.95	1.125
F2403-12-10-0	3/4	5/8	1-1/16-12	7/8-14	0.609	0.484	2.05	1.125
F2403-12-12-O	3/4	3/4	1-1/16-12	1-1/16-12	0.609	0.609	2.16	1.125
F2403-14-14-O	7/8	7/8	1-3/16-12	1-3/16-12	0.719	0.719	2.21	1.250
F2403-16-08-0	1	1/2	1-5/16-12	3/4-18	0.844	0.391	2.00	1.375
F2403-16-12-O	1	3/4	1-5/16-12	1-1/16-12	0.844	0.609	2.20	1.375
F2403-16-16-O	1	1	1-5/16-12	1-5/16-12	0.844	0.844	2.25	1.375
F2403-20-16-0	1-1/4	1	1-5/8-12	1-5/16-12	1.078	0.844	2.38	1.688
F2403-20-20-0	1-1/4	1-1/4	1-5/8-12	1-5/8-12	1.078	1.078	2.43	1.688
F2403-24-16-O	1-1/2	1	1-7/8-12	1-5/16-12	1.312	0.844	2.58	2.000
F2403-24-24-O	1-1/2	1-1/2	1-7/8-12	1-7/8-12	1.312	1.312	2.75	2.000
F2403-32-32-O	2	2	2-1/2-12	2-1/2-12	1.781	1.781	3.40	2.625

FO-FO Straight Large Hex
F2403-LH Series

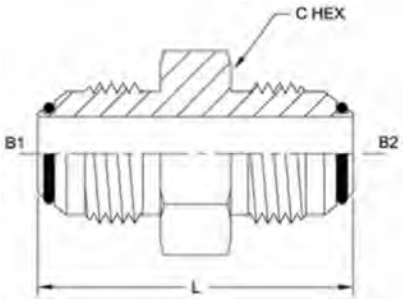

PART NO.SIZE	TUBE O.D.	81 SAE37	B2 SAE37	B1 DRILL	B2 DRILL	L LGTH	C HEX
F2403-LH-04-04-0	1/4	7/16-20	7/16-20	0.172	0.172	1.37	0.688
F2403-LH-06-06-0	3/8	9/16-18	9/16-18	0.297	0.297	1.41	0.812
F2403-LH-08-08-0	1/2	3/4-16	3/4-16	0.391	0.391	1.62	1.000
F2403-LH-10-10-0	5/8	7/8-14	7/8-14	0.484	0.484	1.88	1.125
F2403-LH-12-12-O	3/4	1-1/16-12	1-1/16-12	0.609	0.609	2.16	1.375
F2403-LH-16-16-O	1	1-5/16-12	1-5/16-12	0.844	0.844	2.25	1.625
F2403-LH-20-20-0	1-1/4	1-5/8-12	1-5/8-12	1.078	1.078	2.43	1.875
F2403-LH-24-24-O	1-1/2	1-7/8-12	1-7/8-12	1.312	1.312	2.75	2.125

FO-MP Straight
F2404 Series

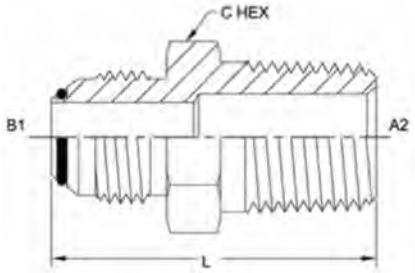

PART N0.SIZE	TUBE O.D.	B1 SAE37	A2 NPTF	B1 DRILL	A2 DRILL	L LGTH	C HEX
F2404-04-02-0	1/4	7/16-20	1/8-27	0.172	0.188	1.22	0.500
F2404-04-04-0	1/4	7/16-20	1/4-18	0.172	0.281	1.42	0.625
F2404-04-06-0	1/4	7/16-20	3/8-18	0.172	0.406	1.42	0.812
F2404-04-08-0	1/4	7/16-20	1/2-14	0.172	0.531	1.68	0.875
F2404-05-02-0	5/16	1/2-20	1/8-27	0.234	0.188	1.22	0.562
F2404-05-04-0	5/16	1/2-20	1/4-18	0.234	0.281	1.42	0.625
F2404-05-06-0	5/16	1/2-20	3/8-18	0.234	0.406	1.42	0.812
F2404-06-02-0	3/8	9/16-18	1/8-27	0.297	0.188	1.24	0.625
F2404-06-04-0	3/8	9/16-18	1/4-18	0.297	0.281	1.43	0.625
F2404-06-06-0	3/8	9/16-18	3/8-18	0.297	0.406	1.43	0.812
F2404-06-08-0	3/8	9/16-18	1/2-14	0.297	0.531	1.69	0.875
F2404-06-12-0	3/8	9/16-18	3/4-14	0.297	0.719	1.75	1.125
F2404-08-04-0	1/2	3/4-16	1/4-18	0.391	0.281	1.53	0.812
F2404-08-06-0	1/2	3/4-16	3/8-18	0.391	0.406	1.53	0.812
F2404-08-08-0	1/2	3/4-16	1/2-14	0.391	0.531	1.79	0.937
F2404-08-12-0	1/2	3/4-16	3/4-14	0.391	0.719	1.85	1.125
F2404-08-16-0	1/2	3/4-16	1-11-1/2	0.391	0.938	2.05	1.375
F2404-10-06-0	5/8	7/8-14	3/8-18	0.484	0.406	1.70	0.937
F2404-10-08-0	5/8	7/8-14	1/2-14	0.484	0.531	1.89	0.937
F2404-10-12-0	5/8	7/8-14	3/4-14	0.484	0.719	1.95	1.125
F2404-12-08-0	3/4	1-1/16-12	1/2-14	0.609	0.531	2.06	1.125
F2404-12-12-O	3/4	1-1/16-12	3/4-14	0.609	0.719	2.06	1.125
F2404-12-16-0	3/4	1-1/16-12	1-11-1/2	0.609	0.938	2.25	1.375
F2404-14-12-O	7/8	1-3/16-12	3/4-14	0.719	0.719	2.09	1.250
F2404-16-12-O	1	1-5/16-12	3/4-14	0.844	0.719	2.11	1.375
F2404-16-16-O	1	1-5/16-12	1-11-1/2	0.844	0.938	2.30	1.375
F2404-16-20-0	1	1-5/16-12	1-1/4-11-1/2	0.844	1.250	2.40	1.688
F2404-20-16-O	1-1/4	1-5/8-12	1-11-1/2	1.078	0.938	2.42	1.688
F2404-20-20-0	1-1/4	1-5/8-12	1-1/4-11-1/2	1.078	1.250	2.45	1.688
F2404-20-24-O	1-1/4	1-5/8-12	1-1/2-11-1/2	1.078	1.500	2.55	2.000
F2404-24-20-O	1-1/2	1-7/8-12	1-1/4-11-1/2	1.312	1.250	2.65	2.000
F2404-24-24-O	1-1/2	1-7/8-12	1-1/2-11-1/2	1.312	1.500	2.68	2.000
F2404-32-32-O	2	2 1/2-12	2-11 1/2	1.781	1.938	3.11	2.625

NWD Technology Fittings

FO-FP Straight
F2405 Series

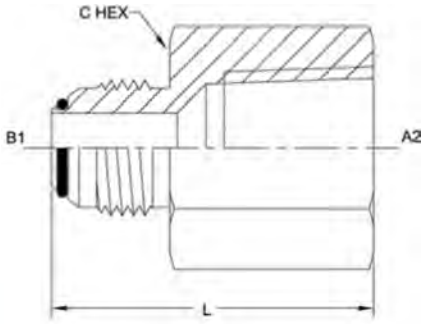

PART ND.SIZE	TUBE O.D.	B1 SAE37	A2 NPTF	B1 DRILL	L LGTH	C HEX
F2405-04-02-0	1/4	7/16-20	1/8-27	0.172	1.19	0.562
F2405-04-04-0	1/4	7/16-20	1/4-18	0.172	1.39	0.750
F2405-04-06-0	1/4	7/16-20	3/8-18	0.172	1.45	0.875
F2405-05-02-0	5/16	1/2-20	1/8-27	0.234	1.17	0.562
F2405-05-04-0	5/16	1/2-20	1/4-18	0.234	1.39	0.750
F2405-06-04-0	3/8	9/16-18	1/4-18	0.297	1.40	0.750
F2405-06-06-0	3/8	9/16-18	3/8-18	0.297	1.46	0.875
F2405-08-04-0	1/2	3/4-16	1/4-18	0.391	1.55	0.875
F2405-08-06-0	1/2	3/4-16	3/8-18	0.391	1.56	0.875
F2405-08-08-0	1/2	3/4-16	1/2-14	0.391	1.79	1.125
F2405-08-12-0	1/2	3/4-16	3/4-14	0.391	1.85	1.375
F2405-10-08-0	5/8	7/8-14	1/2-14	0.484	1.89	1.125
F2405-12-08-0	3/4	1-1/16-12	1/2-14	0.609	2.05	1.375
F2405-12-12-O	3/4	1-1/16-12	3/4-14	0.609	2.06	1.375
F2405-14-12-O	7/8	1-3/16-12	3/4-14	0.719	2.06	1.375
F2405-16-12-O	1	1-5/16-12	3/4-14	0.844	2.12	1.625
F2405-16-16-O	1	1-5/16-12	1-11 1/2	0.844	2.35	1.625
F2405-20-20-0	1-1/4	1-5/8-12	1-1/4-11 1/2	1.078	2.49	2.000
F2405-24-24 O	1-1/2	1-7/8-12	1-1/2-11 1/2	1.312	2.62	2.375
F2405-32-32-O	2	2-1/2-12	2-11 1/2	1.781	2.97	2.875

FJ-FO Straight Reducer
F2406 Series

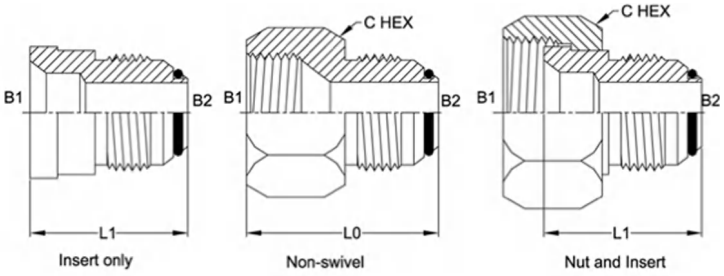

PART NO Insert only	PART NO Non-swivel	PART NO Nut and Insert	B1 TUBE O.D.	B2 TUBE O.D.	B1 SAE37	B2 SAE37	LI LOTH	LO LGTH	C HEX
F2406-06-04-IN-0	F2406-06-04-0	F2406-06-04-2 PC-0	3/8	1/4	9/16-18	7/16-20	0.97	1.17	0.688
F2406-08-04-IN-0	F2406-08-04-0	F2406-08-04-2 PC-0	1/2	1/4	3/4-16	7/16-20	1.00	1.30	0.875
F2406-08-06-IN-0	F2406-08-06-0	F2406-08-06-2 PC-0	1/2	3/8	3/4-16	9/16-18	1.00	1.31	0.875
F2406-10-04-IN-0	F2406-10-04-0	F2406-10-04-2 PC-0	5/8	1/4	7/8-14	7/16-20	1.03	1.39	1.000
F2406-10-06-IN-0	F2406-10-06-0	F2406-10-06-2 PC-0	5/8	3/8	7/8-14	9/16-18	1.03	1.40	1.000
-	F2406-10-08-0		5/8	1/2	7/8-14	3/4-16		1.50	1.000
F2406-12-04-IN-0	F2406-12-04-0	F2406-12-04-2 PC-0	3/4	1/4	1-1/16-12	7/16-20	1.09	1.46	1.250
F2406-12-06-IN-0	F2406-12-06-0	F2406-12-06-2 PC-0	3/4	3/8	1-1/16-12	9/16-18	1.09	1.46	1.250
F2406-12-08-IN-0	F2406-12-08-0	F2406-12-08-2PC-O	3/4	1/2	1-1/16-12	3/4-16	1.19	1.56	1.250
-	F2406-12-10-0	-	3/4	5/8	1-1/16-12	7/8-14	-	1.66	1.250
-	F2406-12-16-O	-	3/4	1	1-1/16-12	1-5/16-12	-	1.82	1.375
F2406-14-06-IN-0	F2406-14-06-0	F2406-14-06-2 PC-0	7/8	3/8	1-3/16-12	9/16-18	1.13	1.53	1.375
F2406-14-08-1N-0	F2406-14-08-0	F2406-14-08-2PC-O	7/8	1/2	1-3/16-12	3/4-16	1.23	1.63	1.375
F2406-14-10-IN-0	F2406-14-10-0	F2406-14-10-2PC-O	7/8	5/8	1-3/16-12	7/8-14	1.33	1.73	1.375
-	F2406-14-12-O	-	7/8	3/4	1-3/16-12	1-1/16-12	-	1.83	1.375
F2406-16-04-IN-0	F2406-16-04-0	F2406-16-04-2PC-O	1	1/4	1-5/16-12	7/16-20	1.22	1.57	1.500
F2406-16-08-IN-0	F2406-16-08-0	F2406-16-08-2 PC-0	1	1/2	1-5/16-12	3/4-16	1.27	1.67	1.500
F2406-16-10-IN-0	F2406-16-10-0	F2406-16-10-2PC-O	1	5/8	1-5/16-12	7/8-14	1.38	1.77	1.500
F2406-16-12-IN-O	F2406-16-12-O	F2406-16-12-2PC-0	1	3/4	1-5/16-12	1-1/16-12	1.47	1.88	1.500
-	F2406-16-14-O	~	1	7/8	1-5/16-12	1-3/16-12	-	1.91	1.500
-	F2406-16-20-0	-	1	1-1/4	1-5/16-12	1-5/8-12	-	1.97	1.688
F2406-20-12-IN-0	F2406-20-12-0	F2406-20-12-2 PC-0	1-1/4	3/4	1-5/8-12	1-1/16-12	1.53	1.93	2.000
F2406-20-16-IN-0	F2406-20-16-0	F2406-20-16-2 PC-0	1-1/4	1	1-5/8-12	1-5/16-12	1.59	1.97	2.000
-	F2406-20-24-O	-	1-1/4	1-1/2	1-5/8-12	1-7/8-12	-	2.15	2.000
F2406-24-16-IN-O	F2406-24-16-O	F2406-24-16-2 PC-0	1-1/2	1	1-7/8-12	1-5/16-12	1.63	2.10	2.250
F2406-24-20-IN-O	F2406-24-20-O	F2406-24-20-2 PC-0	1-1/2	1-1/4	1-7/8-12	1-5/8-12	1.69	2.15	2.250
F2406-32-24-IN-O	F2406-32-24-O	F2406-32-24-2 PC-0	2	1-1/2	2-1/2-12	1-7/8-12	1.91	2.52	2.875

NWD Technology Fittings

FO Plug
F2408 Series

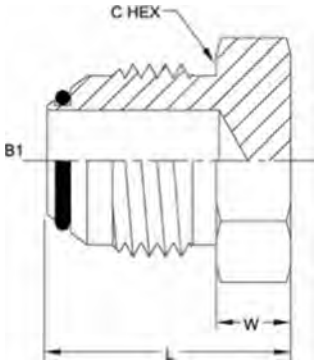

PART NO.SIZE	TUBE O.D.	B1 SAE37	L LGTH	W WIDTH	C HEX
F2408-04-0	1/4	7/16-20	0.80	0.22	0.500
F2408-05-0	5/16	1/2-20	0.80	0.22	0.562
F2408-06-0	3/8	9/16-18	0.84	0.25	0.625
F2408-08-0	1/2	3/4-16	0.94	0.25	0.812
F2408-10-0	5/8	7/8-14	1.10	0.31	0.937
F2408-12-O	3/4	1-1/16-12	1.28	0.38	1.125
F2408-14-O	7/8	1-3/16-12	1.31	0.38	1.250
F2408-16-O	1	1-5/16-12	1.33	0.38	1.375
F2408-20-0	1-1/4	1-5/8-12	1.45	0.46	1.688
F2408-24-O	1-1/2	1-7/8-12	1.65	0.53	2.000
F2408-32-O	2	2-1/2-12	2.05	0.68	2.625

FO-FO 90°
F2500 Series

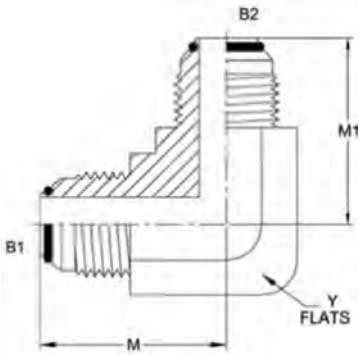

PART NO.SIZE	B1 TUBE O.D.	B1 SAE37	B2 SAE37	B1 DRILL	B2 DRILL	M LGTH	MI LGTH	Y FLATS
F2500-04-04-0	1/4	7/16-20	7/16-20	0.172	0.172	0.89	0.89	0.438
F2500-05-05-0	5/16	1/2-20	1/2-20	0.234	0.234	0.95	0.95	0.562
F2500-06-06-0	3/8	9/16-18	9/16-18	0.297	0.297	1.06	1.06	0.562
F2500-08-06-0	1/2	3/4-16	9/16-18	0.391	0.297	1.25	1.14	0.750
F2500-08-08-0	1/2	3/4-16	3/4-16	0.391	0.391	1.25	1.25	0.750
F2500-10-08-0	5/8	7/8-14	3/4-16	0.484	0.391	1.45	1.33	0.875
F2500-10-10-0	5/8	7/8-14	7/8-14	0.484	0.484	1.45	1.45	0.875
F2500-12-12-0	3/4	1-1/16-12	1-1/16-12	0.609	0.609	1.66	1.66	1.062
F2500-14-14-0	7/8	1-3/16-12	1-3/16-12	0.719	0.719	1.80	1.80	1.312
F2500-16-16-0	1	1-5/16-12	1-5/16-12	0.844	0.844	1.81	1.81	1.312
F2500-20-20-0	1-1/4	1-5/8-12	1-5/8-12	1.078	1.078	2.06	2.06	1.625
F2500-24-24-O	1-1/2	1-7/8-12	1-7/8-12	1.312	1.312	2.33	2.33	1.875
F2500-32-32-O	2	2-1/2-12	2-1/2-12	1.781	1.781	3.06	3.06	2.500

FO-MP 90°
F2501 Series

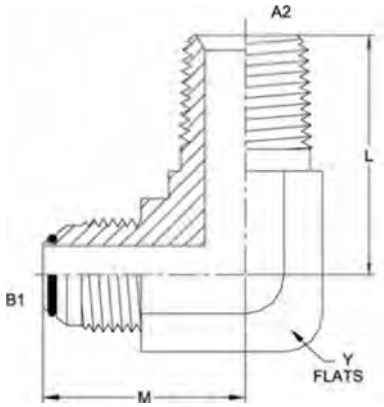

PART NO. SIZE	TUBE O.D.	B1 SAE37	AZ NPTF	B1 DRILL	A2 DRILL	M LGTH	L LGTH	Y FLATS
F2501-04-02-0	1/4	7/16-20	1/8-27	0.172	0.188	0.89	0.78	0.438
F2501-04-04-0	1/4	7/16-20	1/4-18	0.172	0.281	1.05	1.09	0.562
F2501-04-06-0	1/4	7/16-20	3/8-18	0.172	0.406	1.12	1.22	0.750
F2501-04-08-0	1/4	7/16-20	1/2-14	0.172	0.531	1.21	1.47	0.875
F2501-04-12-0	1/4	7/16-20	3/4-14	0.172	0.719	1.30	1.59	1.062
F2501-05-02-0	5/16	1/2-20	1/8-27	0.234	0.188	0.95	0.78	0.562
F2501-05-04-0	5/16	1/2-20	1/4-18	0.234	0.281	1.05	1.09	0.562
F2501-05-06-0	5/16	1/2-20	3/8-18	0.234	0.406	1.12	1.22	0.750
F2501-06-02-0	3/8	9/16-18	1/8-27	0.297	0.188	1.06	0.90	0.562
F2501-06-04-0	3/8	9/16-18	1/4-18	0.297	0.281	1.06	1.09	0.562
F2501-06-06-0	3/8	9/16-18	3/8-18	0.297	0.406	1.14	1.22	0.750
F2501-06-08-0	3/8	9/16-18	1/2-14	0.297	0.531	1.22	1.47	0.875
F2501-06-12-0	3/8	9/16-18	3/4-14	0.297	0.719	1.31	1.59	1.062
F2501-08-04-0	1/2	3/4-16	1/4-18	0.391	0.281	1.25	1.22	0.750
F2501-08-06-0	1/2	3/4-16	3/8-18	0.391	0.406	1.25	1.22	0.750
F2501-08-08-0	1/2	3/4-16	1/2-14	0.391	0.531	1.33	1.47	0.875
F2501-08-12-0	1/2	3/4-16	3/4-14	0.391	0.719	1.42	1.59	1.062
F2501 -08-16-0	1/2	3/4-16	1-11-1/2	0.391	0.938	1.52	1.97	1.312
F2501-10-06-0	5/8	7/8-14	3/8-18	0.484	0.406	1.45	1.28	0.875
F2501-10-08-0	5/8	7/8-14	1/2-14	0.484	0.531	1.45	1.47	0.875
F2501-10-12-0	5/8	7/8-14	3/4-14	0.484	0.719	1.54	1.59	1.062
F2501-10-16-0	5/8	7/8-14	1-11-1/2	0.484	0.938	1.64	1.97	1.312
F2501-12-08-0	3/4	1-1/16-12	1/2-14	0.609	0.531	1.66	1.59	1.062
F2501-12-12-0	3/4	1-1/16-12	3/4-14	0.609	0.719	1.66	1.59	1.062
F2501-12-16-0	3/4	1-1/16-12	1-11-1/2	0.609	0.938	1.76	1.97	1.312
F2501-14-12-O	7/8	1-3/16-12	3/4-14	0.719	0.719	1.80	1.69	1.312
F2501-16-12-0	1	1-5/16-12	3/4-14	0.844	0.719	1.81	1.78	1.312
F2501-16-16-0	1	1-5/16-12	1-11-1/2	0.844	0.938	1.81	1.97	1.312
F2501-16-20-0	1	1-5/16-12	1-1/4-11-1/2	0.844	1.250	2.01	2.38	1.625
F2501-20-16-0	1-1/4	1-5/8-12	1-11-1/2	1.078	0.938	2.06	2.35	1.625
F2501-20-20-0	1-1/4	1-5/8-12	1-1/4-11-1/2	1.078	1.250	2.06	2.38	1.625
F2501-20-24-0	1-1/4	1-5/8-12	1-1/2-11-1/2	1.078	1.500	2.20	2.64	1.875
F2501-24-20-0	1-1/2	1-7/8-12	1-1/4-11-1/2	1.312	1.250	2.33	2.61	1.875
F2501-24-24-0	1-1/2	1-7/8-12	1-1/2-11-1/2	1.312	1.500	2.33	2.64	1.875
F2501-32-32-0	2	2-1/2-12	2-11-1/2	1.781	1.938	3.06	3.00	2.500

NWD Technology Fittings

FO-MP 90° Long
F2501-L Series

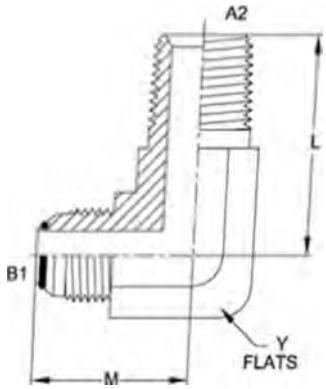

PART NO.SIZE	TUBE O.O.	B1 SAE37	A2 NPTF	B1 DRILL	A2 DRILL	M LCTH	I L6TH	Y FLATS
F2501-L-04-02-0	1/4	7/16-20	1/8-27	0.172	0.188	0.89	1.17	0.438
F2501-L-04-04-0	1/4	7/16-20	1/4-18	0.172	0.281	1.05	1.58	0.562
F2501-L-05-02-0	5/16	1/2-20	1/8-27	0.234	0.188	0.95	1.17	0.562
F2501-L-05-04-0	5/16	1/2-20	1/4-18	0.234	0.281	0.95	1.58	0.562
F2501-L-06-04-0	3/8	9/16-18	1/4-18	0.297	0.281	1.06	1.58	0.562
F2501-L-06-06-0	3/8	9/16-18	3/8-18	0.297	0.406	1.14	1.82	0.750
F2501-L-08-06-0	1/2	3/4-16	3/8-18	0.391	0.406	1.25	1.82	0.750
F2501-L-08-08-0	1/2	3/4-16	1/2-14	0.391	0.531	1.33	2.17	0.875
F2501-L-08-12-0	1/2	3/4-16	3/4-14	0.391	0.719	1.42	2.44	1.062
F2501-L-10-08-0	5/8	7/8-14	1/2-14	0.484	0.531	1.45	2.17	0.875
F2501-L-12-12-O	3/4	1-1/16-12	3/4-14	0.609	0.719	1.66	2.44	1.062
F2501-L-14-12-O	7/8	1-3/16-12	3/4-14	0.719	0.719	1.80	2.59	1.312
F2501-L-16-16-O	1	1-5/16-12	1-11-1/2	0.844	0.938	1.81	3.01	1.312
F2501-L-20-20-0	1-1/4	1-5/8-12	1-1/4-11-1/2	1.078	1.250	2.06	3.69	1.625
F2501-L-24-24-O	1-1/2	1-7/8-12	1-1/2-11-1/2	1.312	1.500	2.33	4.10	1.875

FO-MP 90° X-Long
F2501-LL Series

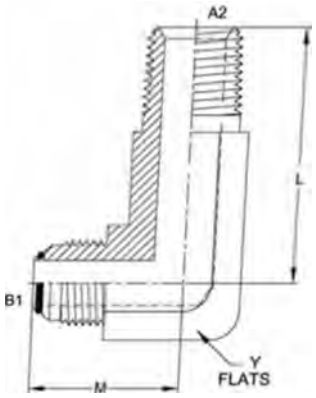

PART NO.SIZE	TUBE O.D.	B1 SAE37	A2 NPTF	B1 DRILL	A2 DRILL	M LGTH	I LGTH	Y FLATS
F2501-LL-04-02-0	1/4	7/16-20	1/8-27	0.172	0.188	0.89	1.56	0.438
F2501-LL-04-04-0	1/4	7/16-20	1/4-18	0.172	0.281	1.05	2.07	0.562
F2501-LL-05-02-0	5/16	1/2-20	1/8-27	0.234	0.188	0.95	1.56	0.562
F2501-LL-05-04-0	5/16	1/2-20	1/4-18	0.234	0.281	1.05	2.07	0.562
F2501-LL-06-04-0	3/8	9/16-18	1/4-18	0.297	0.281	1.06	2.07	0.562
F2501-LL-06-06-0	3/8	9/16-18	3/8-18	0.297	0.406	1.14	2.42	0.750
F2501-LL-08-06-0	1/2	3/4-16	3/8-18	0.391	0.406	1.25	2.42	0.750
F2501-LL-08-08-0	1/2	3/4-16	1/2-14	0.391	0.531	1.33	2.87	0.875
F2501-LL-10-08-0	5/8	7/8-14	1/2-14	0.484	0.531	1.45	2.87	0.875
F2501-LL-12-12-O	3/4	1-1/16-12	3/4-14	0.609	0.719	1.66	3.28	1.062
F2501-LL-14-12-O	7/8	1-3/16-12	3/4-14	0.719	0.719	1.80	3.50	1.312
F2501-LL-16-16-O	1	1-5/16-12	1-11-1/2	0.844	0.938	1.81	4.05	1.312
F2501-LL-20-20-0	1-1/4	1-5/8-12	1-1/4-11-1/2	1.078	1.250	2.06	5.00	1.625

FO-MP 90° XX-Long
F2501-LLL Series

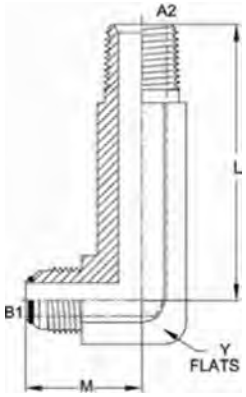

PART NO.SIZE	TUBE O.D.	B1 SAE37	A2 NPTF	B1 DRILL	A2 DRILL	M LGTH	L LGTH	Y FLATS
F2501-LLL-08-06-0	1/2	3/4-16	3/8-18	0.391	0.406	1.25	3.75	0.750

FO-FP 90°
F2502 Series

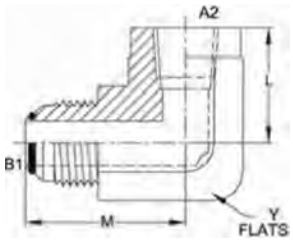

PART NO.SIZE	TUBE 0.0.	B1 SAE37	A2 NPTF	B1 DRILL	M LGTH	L LGTH	Y FLATS
F2502-04-02-0	1/4	7/16-20	1/8-27	0.172	1.08	0.66	0.562
F2502-04-04-0	1/4	7/16-20	1/4-18	0.172	1.22	0.88	0.750
F2502-05-02-0	5/16	1/2-20	1/8-27	0.234	1.08	0.66	0.562
F2502-05-04-0	5/16	1/2-20	1/4-18	0.234	1.22	0.88	0.750
F2502-06-04-0	3/8	9/16-18	1/4-18	0.297	1.23	0.88	0.750
F2502-06-06-0	3/8	9/16-18	3/8-18	0.297	1.31	1.02	0.875
F2502-06-08-0	3/8	9/16-18	1/2-14	0.297	1.41	1.23	1.062
F2502-08-06-0	1/2	3/4-16	3/8-18	0.391	1.42	1.02	0.875
F2502-08-08-0	1/2	3/4-16	1/2-14	0.391	1.52	1.23	1.062
F2502-10-08-0	5/8	7/8-14	1/2-14	0.484	1.64	1.23	1.062
F2502-12-12-O	3/4	1-1/16-12	3/4-14	0.609	1.89	1.36	1.312
F2502-14-12-O	7/8	1-3/16-12	3/4-14	0.719	1.86	1.42	1.312
F2502-16-16-O	1	1-5/16-12	1-11-1/2	0.844	2.17	1.62	1.625
F2502-20-20-0	1-1/4	1-5/8-12	1-1/4-11-1/2	1.078	2.33	1.70	1.875
F2502-24-24-O	1-1/2	1-7/8-12	1-1/2-11-1/2	1.312	2.89	2.08	2.562
F2502-32-32-O	2	2-1/2-12	2-11-1/2	1.781	3.30	2.39	2.812

NWD Technology Fittings

FO-MP 45°
F2503 Series

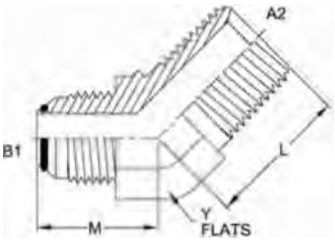

PART NO.SIZE	TUBE O.D.	B1 SAE37	A2 NPTF	B1 DRILL	A2 DRILL	M LETH	L LETH	Y FLATS
F2503-04-02-0	1/4	7/16-20	1/8-27	0.172	0.188	0.72	0.64	0.438
F2503-04-04-0	1/4	7/16-20	1/4-18	0.172	0.281	0.82	0.86	0.562
F2503-05-02-0	5/16	1/2-20	1/8-27	0.234	0.188	0.77	0.64	0.562
F2503-05-04-0	5/16	1/2-20	1/4-18	0.234	0.281	0.82	0.86	0.562
F2503-06-02-0	3/8	9/16-18	1/8-27	0.297	0.188	0.83	0.67	0.562
F2503-06-04-0	3/8	9/16-18	1/4-18	0.297	0.281	0.83	0.86	0.562
F2503-06-06-0	3/8	9/16-18	3/8-18	0.297	0.406	0.87	0.95	0.750
F2503-06-08-0	3/8	9/16-18	1/2-14	0.297	0.531	0.88	1.17	0.875
F2503-08-04-0	1/2	3/4-16	1/4-18	0.391	0.281	0.98	0.95	0.750
F2503-08-06-0	1/2	3/4-16	3/8-18	0.391	0.406	0.98	0.95	0.750
F2503-08-08-0	1/2	3/4-16	1/2-14	0.391	0.531	0.99	1.17	0.875
F2503-08-12-0	1/2	3/4-16	3/4-14	0.391	0.719	1.04	1.20	1.062
F2503-10-06-0	5/8	7/8-14	3/8-18	0.484	0.406	1.11	0.98	0.875
F2503-10-08-0	5/8	7/8-14	1/2-14	0.484	0.531	1.11	1.17	0.875
F2503-10-12-0	5/8	7/8-14	3/4-14	0.484	0.719	1.16	1.20	1.062
F2503-12-08-0	3/4	1-1/16-12	1/2-14	0.609	0.531	1.28	1.20	1.062
F2503-12-12-O	3/4	1-1/16-12	3/4-14	0.609	0.719	1.28	1.20	1.062
F2503-12-16-O	3/4	1-1/16-12	1-11-1/2	0.609	0.938	1.42	1.48	1.312
F2503-14-12-O	7/8	1-3/16-12	3/4-14	0.719	0.719	1.45	1.30	1.312
F2503-16-12-O	1	1-5/16-12	3/4-14	0.844	0.719	1.47	1.29	1.312
F2503-16-16-O	1	1-5/16-12	1-11-1/2	0.844	0.938	1.47	1.48	1.312
F2503-20-20-0	1-1/4	1-5/8-12	1-1/4-11-1/2	1.078	1.250	1.59	1.67	1.625
F2503-24-24-O	1-1/2	1-7/8-12	1-1/2-11-1/2	1.312	1.500	1.78	1.77	1.875
F2503-32-32-O	2	2-1/2-12	2-11-1/2	1.781	1.938	2.22	2.11	2.500

FO-FO-MP Tee
F2601 Series

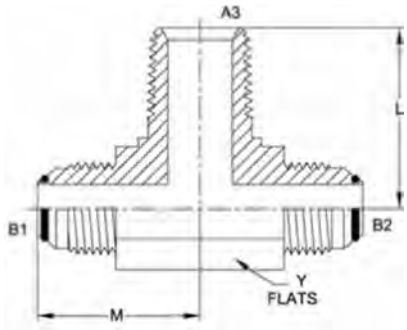

PART NO.SIZE	TUBE O.D.	B1 SAE37	B2 SAE37	A3 NPTF	B1 DRILL	B2 DRILL	A3 DRILL	M LGTH	L LGTH	Y FLATS
F2601-04-04-02-0	1/4	7/16-20	7/16-20	1/8-27	0.172	0.172	0.188	0.89	0.78	0.438
F2601-04-04-04-0	1/4	7/16-20	7/16-20	1/4-18	0.172	0.172	0.281	1.05	1.09	0.562
F2601-05-05-02-0	5/16	1/2-20	1/2-20	1/8-27	0.234	0.234	0.188	0.95	0.78	0.562
F2601-05-05-04-0	5/16	1/2-20	1/2-20	1/4-18	0.234	0.234	0.281	1.05	1.09	0.562
F2601-06-06-04-0	3/8	9/16-18	9/16-18	1/4-18	0.297	0.297	0.281	1.06	1.09	0.562
F2601-06-06-06-0	3/8	9/16-18	9/16-18	3/8-18	0.297	0.297	0.406	1.14	1.22	0.750
F2601 -08-08-06-0	1/2	3/4-16	3/4-16	3/8-18	0.391	0.391	0.406	1.25	1.22	0.750
F2601-08-08-08-0	1/2	3/4-16	3/4-16	1/2-14	0.391	0.391	0.531	1.33	1.47	0.875
F2601 -10-10-08-0	5/8	7/8-14	7/8-14	1/2-14	0.484	0.484	0.531	1.45	1.47	0.875
F2601-12-12-12-0	3/4	1-1/16-12	1-1/16-12	3/4-14	0.609	0.609	0.719	1.66	1.59	1.062
F2601-14-14-12-0	7/8	1-3/16-12	1-3/16-12	3/4-14	0.719	0.719	0.719	1.80	1.69	1.312
F2601-16-16-16-0	1	1-5/16-12	1-5/16-12	1-11-1/2	0.844	0.844	0.938	1.81	1.97	1.312
F2601-20-20-20-0	1-1/4	1-5/8-12	1-5/8-12	1-1/4-11-1/2	1.078	1.078	1.250	2.06	2.38	1.625
F2601-24-24-24-0	1-1/2	1-7/8-12	1-7/8-12	1-1/2-11-1/2	1.312	1.312	1.500	2.33	2.64	1.875

FO-FO-FP Tee
F2602 Series

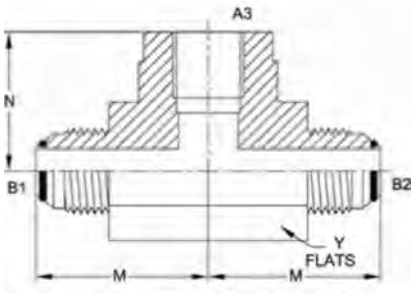

PART NO.SIZE	TUBE O.D.	B1 SAE37	B2 SAE37	A3 NPTF	B1 DRILL	B2 DRILL	M LGTH	M LGTH	N LGTH	Y FLATS
F2602-04-04-02-0	1/4	7/16-20	7/16-20	1/8-27	0.172	0.172	1.08	1.08	0.66	0.562
F2602-04-04-04-0	1/4	7/16-20	7/16-20	1/4-18	0.172	0.172	1.22	1.22	0.88	0.750
F2602-05-05-02-0	5/16	1/2-20	1/2-20	1/8-27	0.234	0.234	1.08	1.08	0.66	0.562
F2602-06-06-04-0	3/8	9/16-18	9/16-18	1/4-18	0.297	0.297	1.23	1.23	0.88	0.750
F2602-06-06-06-0	3/8	9/16-18	9/16-18	3/8-18	0.297	0.297	1.31	1.31	1.02	0.875
F2602-08-08-06-0	1/2	3/4-16	3/4-16	3/8-18	0.391	0.391	1.42	1.42	1.02	0.875
F2602-08-08-08-0	1/2	3/4-16	3/4-16	1/2-14	0.391	0.391	1.52	1.52	1.23	1.062
F2602-10-10-08-0	5/8	7/8-14	7/8-14	1/2-14	0.484	0.484	1.64	1.64	1.23	1.062
F2602-12-12-12-O	3/4	1-1/16-12	1-1/16-12	3/4-14	0.609	0.609	1.89	1.89	1.36	1.312
F2602-14-14-12-O	7/8	1-3/16-12	1-3/16-12	3/4-14	0.719	0.719	1.86	1.86	1.42	1.312
F2602-16-16-16-O	1	1-5/16-12	1-5/16-12	1-11-1/2	0.844	0.844	2.17	2.17	1.62	1.625
F2602-20-20-20-0	1-1/4	1-5/8-12	1-5/8-12	1-1/4-11-1/2	1.078	1.078	2.33	2.33	1.70	1.875
F2602-24-24-24-O	1-1/2	1-7/8-12	1-7/8-12	1-1/2-11-1/2	1.312	1.312	2.89	2.89	2.08	2.562
F2602-32-32-32-O	2	2-1/2-12	2-1/2-12	2-11-1/2	1.781	1.781	3.30	3.30	2.39	2.812

NWD Technology Fittings

FO-FO-FO Tee
F2603 Series

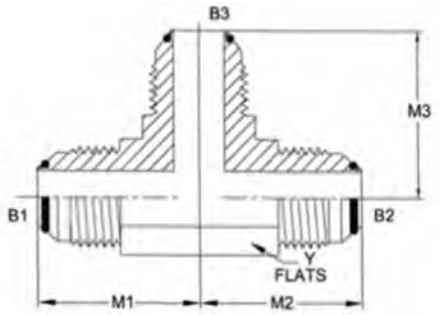

PART NO.SIZE	TUBE O.D.	B1 SAE37	B2 SAE37	B3 SAE37	B1 DRILL	B2 DRILL	B3 DRILL	MI LOTH	M2 LGTH	M3 LGTH	Y FLATS
F2603-04-04-04-0	1/4	7/16-20	7/16-20	7/16-20	0.172	0.172	0.172	0.89	0.89	0.89	0.438
F2603-05-05-05-0	5/16	1/2-20	1/2-20	1/2-20	0.234	0.234	0.234	0.95	0.95	0.95	0.562
F2603-06-06-06-0	3/8	9/16-18	9/16-18	9/16-18	0.297	0.297	0.297	1.06	1.06	1.06	0.562
F2603-08-08-08-0	1/2	3/4-16	3/4-16	3/4-16	0.391	0.391	0.391	1.25	1.25	1.25	0.750
F2603-08-08-12-0	1/2	3/4-16	3/4-16	1-1/16-12	0.391	0.391	0.609	1.42	1.42	1.66	1.062
F2603-10-08-08-0	5/8	7/8-14	3/4-16	3/4-16	0.484	0.391	0.391	1.45	1.33	1.33	0.875
F2603-10-10-08-0	5/8	7/8-14	7/8-14	3/4-16	0.484	0.484	0.391	1.45	1.45	1.33	0.875
F2603-10-10-10-0	5/8	7/8-14	7/8-14	7/8-14	0.484	0.484	0.484	1.45	1.45	1.45	0.875
F2603-10-10-12-0	5/8	7/8-14	7/8-14	1-1/16-12	0.484	0.484	0.609	1.54	1.54	1.66	1.062
F2603-12-12-12-O	3/4	1-1/16-12	1-1/16-12	1-1/16-12	0.609	0.609	0.609	1.66	1.66	1.66	1.062
F2603-14-14-14-O	7/8	1-3/16-12	1-3/16-12	1-3/16-12	0.719	0.719	0.719	1.80	1.80	1.80	1.312
F2603-16-16-16-O	1	1-5/16-12	1-5/16-12	1-5/16-12	0.844	0.844	0.844	1.81	1.81	1.81	1.312
F2603-20-20-16-0	1-1/4	1-5/8-12	1-5/8-12	1-5/16-12	1.078	1.078	0.844	2.06	2.06	2.01	1.625
F2603-20-20-20-0	1-1/4	1-5/8-12	1-5/8-12	1-5/8-12	1.078	1.078	1.078	2.06	2.06	2.06	1.625
F2603-24-24-24-O	1-1/2	1-7/8-12	1-7/8-12	1-7/8-12	1.312	1.312	1.312	2.33	2.33	2.33	1.875
F2603-32-32-32-O	2	2-1/2-12	2-1/2-12	2-1/2-12	1.781	1.781	1.781	3.06	3.06	3.06	2.500

FO-MP-FO Tee
F2605 Series

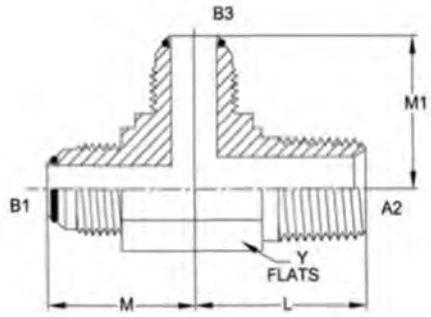

PART N0.SIZE	TUBE 0.0.	B1 SAE37	A2 NPTF	B3 SAE37	B1 DRILL	A2 DRILL	B3 DRILL	M LGTH	L LGTH	MI LGTH	Y FLATS
F2605-04-02-04-0	1/4	7/16-20	1/8-27	7/16-20	0.172	0.188	0.172	0.89	0.78	0.89	0.438
F2605-04-04-04-0	1/4	7/16-20	1/4-18	7/16-20	0.172	0.281	0.172	1.05	1.09	1.05	0.562
F2605-05-02-05-0	5/16	1/2-20	1/8-27	1/2-20	0.234	0.188	0.234	0.95	0.78	0.95	0.562
F2605-06-04-06-0	3/8	9/16-18	1/4-18	9/16-18	0.297	0.281	0.297	1.06	1.09	1.06	0.562
F2605-06-06-06-0	3/8	9/16-18	3/8-18	9/16-18	0.297	0.406	0.297	1.14	1.22	1.14	0.750
F2605-06-08-06-0	3/8	9/16-18	1/2-14	9/16-18	0.297	0.531	0.297	1.22	1.47	1.22	0.875
F2605-08-06-08-0	1/2	3/4-16	3/8-18	3/4-16	0.391	0.406	0.391	1.25	1.22	1.25	0.750
F2605-08-08-08-0	1/2	3/4-16	1/2-14	3/4-16	0.391	0.531	0.391	1.33	1.47	1.33	0.875
F2605-10-08-10-0	5/8	7/8-14	1/2-14	7/8-14	0.484	0.531	0.484	1.45	1.47	1.45	0.875
F2605-12-08-12-0	3/4	1-1/16-12	1/2-14	1-1/16-12	0.609	0.531	0.609	1.66	1.59	1.66	1.062
F2605-12-12-12-O	3/4	1-1/16-12	3/4-14	1-1/16-12	0.609	0.719	0.609	1.66	1.59	1.66	1.062
F2605-14-12-14-O	7/8	1-3/16-12	3/4-14	1-3/16-12	0.719	0.719	0.719	1.80	1.69	1.80	1.312
F2605-16-16-16-O	1	1-5/16-12	1-11-1/2	1-5/16-12	0.844	0.938	0.844	1.81	1.97	1.81	1.312
F2605-20-20-20-0	1-1/4	1-5/8-12	1-1/4-11-1/2	1-5/8-12	1.078	1.250	1.078	2.06	2.38	2.06	1.625
F2605-24-24-24-O	1-1/2	1-7/8-12	1-1/2-11-1/2	1-7/8-12	1.312	1.500	1.312	2.33	2.64	2.33	1.875
F2605-32-32-32-O	2	2-1/2-12	2-11-1/2	2-1/2-12	1.781	1.938	1.781	3.06	3.00	3.06	2.500

FO-FP-FO Tee
F2606 Series

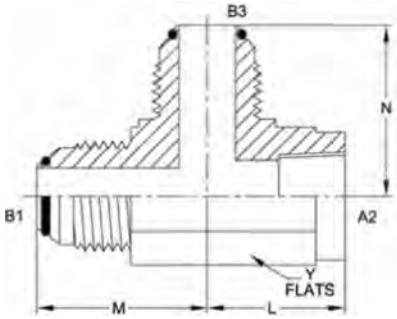

PART NO.SIZE	TUBE O.D.	B1 SAE37	A2 NPTF	B3 SAE37	B1 DRILL	B3 DRILL	M LGTH	L LGTH	N LGTH	Y FLATS
F2606-04-02-04-0	1/4	7/16-20	1/8-27	7/16-20	0.172	0.172	1.08	0.66	1.08	0.562
F2606-04-04-04-0	1/4	7/16-20	1/4-18	7/16-20	0.172	0.172	1.22	0.88	1.22	0.750
F2606-06-04-06-0	3/8	9/16-18	1/4-18	9/16-18	0.297	0.297	1.23	0.88	1.23	0.750
F2606-06-06-06-0	3/8	9/16-18	3/8-18	9/16-18	0.297	0.297	1.31	1.02	1.31	0.875
F2606-08-06-08-0	1/2	3/4-16	3/8-18	3/4-16	0.391	0.391	1.42	1.02	1.42	0.875
F2606-08-08-08-0	1/2	3/4-16	1/2-14	3/4-16	0.391	0.391	1.52	1.23	1.52	1.062
F2606-10-08-10-0	5/8	7/8-14	1/2-14	7/8-14	0.484	0.484	1.64	1.23	1.64	1.062
F2606-12-12-12-O	3/4	1-1/16-12	3/4-14	1-1/16-12	0.609	0.609	1.89	1.36	1.89	1.312
F2606-14-12-14-O	7/8	1-3/16-12	3/4-14	1-3/16-12	0.719	0.719	1.86	1.42	1.86	1.312
F2606-16-16-16-O	1	1-5/16-12	1-11-1/2	1-5/16-12	0.844	0.844	2.17	1.62	2.17	1.625
F2606-24-24-24-O	1-1/2	1-7/8-12	1-1/2-11-1/2	1-7/8-12	1.312	1.312	2.89	2.08	2.89	2.562

FO-FO-FO-FO Cross
F2650 Series

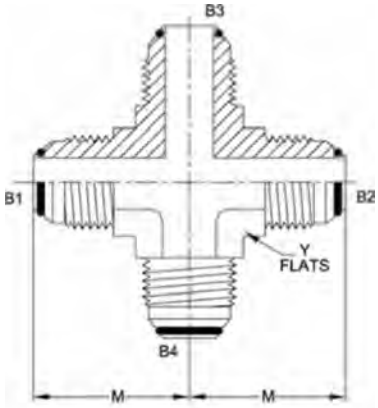

PART N0.S1ZE	TUBE O.D.	B1 SAE37	B2 SAE37	B3 SAE37	B4 SAE37	B1 DRILL	B2 DRILL	B3 DRILL	B4 DRILL	M LGTH	Y FLATS
F2650-04-04-04-04-0	1/4	7/16-20	7/16-20	7/16-20	7/16-20	0.172	0.172	0.172	0.172	0.89	0.438
F2650-05-05-05-05-0	5/16	1/2-20	1/2-20	1/2-20	1/2-20	0.234	0.234	0.234	0.234	0.95	0.562
F2650-06-06-06-06-0	3/8	9/16-18	9/16-18	9/16-18	9/16-18	0.297	0.297	0.297	0.297	1.06	0.562
F2650-08-08-08-08-0	1/2	3/4-16	3/4-16	3/4-16	3/4-16	0.391	0.391	0.391	0.391	1.25	0.75
F2650-10-10-10-10-0	5/8	7/8-14	7/8-14	7/8-14	7/8-14	0.484	0.484	0.484	0.484	1.45	0.875
F2650-12-12-12-12-O	3/4	1-1/16-12	1-1/16-12	1-1/16-12	1-1/16-12	0.609	0.609	0.609	0.609	1.66	1.062
F2650-14-14-14-14-0	7/8	1-3/16-12	1-3/16-12	1-3/16-12	1-3/16-12	0.719	0.719	0.719	0.719	1.80	1.312
F2650-16-16-16-16-0	1	1-5/16-12	1-5/16-12	1-5/16-12	1-5/16-12	0.844	0.844	0.844	0.844	1.81	1.312
F2650-20-20-20-20-0	1-1/4	1-5/8-12	1-5/8-12	1-5/8-12	1-5/8-12	1.078	1.078	1.078	1.078	2.06	1.625
F2650-24-24-24-24-O	1-1/2	1-7/8-12	1-7/8-12	1-7/8-12	1-7/8-12	1.312	1.312	1.312	1.312	2.33	1.875

NWD Technology Fittings

FO-FO Bulkhead Straight
F2700 Series

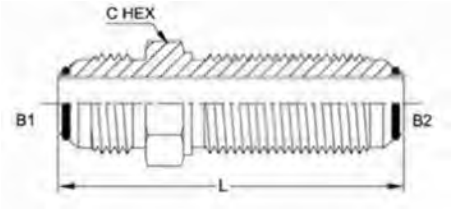

PART NO.SIZE	TUBE O.D.	B1 SAE37	B2 SAE37	B1 DRILL	B2 DRILL	L LGTH	C HEX
F2700-04-04-0	1/4	7/16-20	7/16-20	0.172	0.172	2.07	0.688
F2700-05-05-0	5/16	1/2-20	1/2-20	0.234	0.234	2.07	0.750
F2700-06-06-0	3/8	9/16-18	9/16-18	0.297	0.297	2.18	0.812
F2700-08-08-0	1/2	3/4-16	3/4-16	0.391	0.391	2.44	1.000
F2700-10-10-0	5/8	7/8-14	7/8-14	0.484	0.484	2.74	1.125
F2700-12-12-0	3/4	1-1/16-12	1-1/16-12	0.609	0.609	3.09	1.375
F2700-16-16-0	1	1-5/16-12	1-5/16-12	0.844	0.844	3.14	1.625
F2700-20-20-0	1-1/4	1-5/8-12	1-5/8-12	1.078	1.078	3.31	1.875
F2700-24-24-O	1-1/2	1-7/8-12	1-7/8-12	1.312	1.312	3.52	2.125
F2700-32-32-O	2	2-1/2-12	2-1/2-12	1.781	1.781	4.20	2.750

FO-FO Bulkhead 90°
F2701 Series

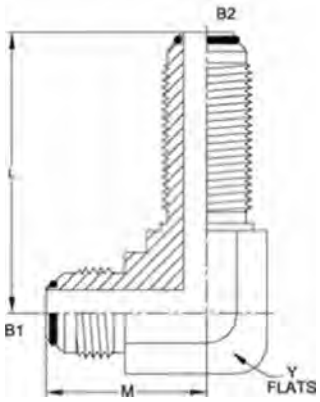

PART NO.SIZE	TUBE O.D.	B1 SAE37	B2 SAE37	B1 DRILL	B2 DRILL	M LGTH	L LGTH	Y FLATS
F2701 -04-04-0	1/4	7/16-20	7/16-20	0.172	0.172	0.97	1.59	0.438
F2701-05-05-0	5/16	1/2-20	1/2-20	0.234	0.234	1.06	1.72	0.562
F2701-06-06-0	3/8	9/16-18	9/16-18	0.297	0.297	1.09	1.81	0.562
F2701-08-08-0	1/2	3/4-16	3/4-16	0.391	0.391	1.36	2.11	0.750
F2701-10-10-0	5/8	7/8-14	7/8-14	0.484	0.484	1.56	2.39	0.875
F2701-12-12-0	3/4	1-1/16-12	1-1/16-12	0.609	0.609	1.78	2.67	1.062
F2701-16-16-0	1	1-5/16-12	1-5/16-12	0.844	0.844	1.94	2.80	1.312

FO-FO Bulkhead 45°
F2702 Series

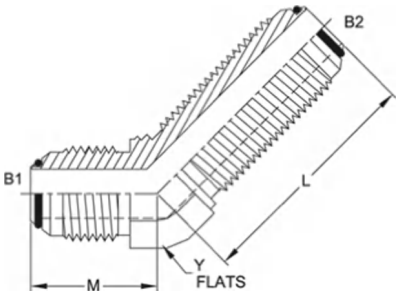

PART ND.SIZE	TUBE 0.0.	81 SAE37	B2 SAE37	B1 DRILL	B2 DRILL	M LOTH	L LOTH	Y FIATS
F2702-04-04-0	1/4	7/16-20	7/16-20	0.172	0.172	0.72	1.53	0.438
F2702-05-05-0	5/16	1/2-20	1/2-20	0.234	0.234	0.77	1.66	0.562
F2702-06-06-0	3/8	9/16-18	9/16-18	0.297	0.297	0.83	1.67	0.562
F2702-08-08-0	1/2	3/4-16	3/4-16	0.391	0.391	0.98	1.94	0.750
F2702-10-10-0	5/8	7/8-14	7/8-14	0.484	0.484	1.11	2.17	0.875
F2702-12-12-O	3/4	1-1/16-12	1-1/16-12	0.609	0.609	1.28	2.44	1.062
F2702-16-16-O	1	1-5/16-12	1-5/16-12	0.844	0.844	1.47	2.56	1.312

FO-FO-FO Bulkhead Branch Tee
F2703 Series

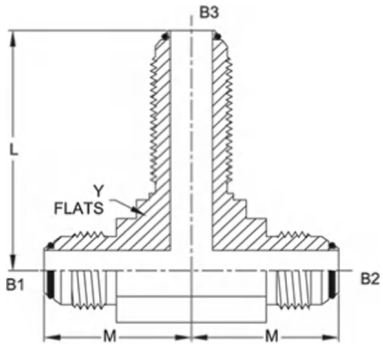

PART N0.SIZE	TUBE O.D.	B1 SAE37	B2 SAE37	B3 SAE37	B1 DRILL	B2 DRILL	B3 DRILL	M LGTH	M LGTH	L LGTH	Y FLATS
F2703-04-04-04-0	1/4	7/16-20	7/16-20	7/16-20	0.172	0.172	0.172	0.97	0.97	1.59	0.438
F2703-06-06-06-0	3/8	9/16-18	9/16-18	9/16-18	0.297	0.297	0.297	1.09	1.09	1.81	0.562
F2703-08-08-08-0	1/2	3/4-16	3/4-16	3/4-16	0.391	0.391	0.391	1.36	1.36	2.11	0.750
F2703-10-10-10-0	5/8	7/8-14	7/8-14	7/8-14	0.484	0.484	0.484	1.56	1.56	2.39	0.875
F2703-12-12-12-O	3/4	1-1/16-12	1-1/16-12	1-1/16-12	0.609	0.609	0.609	1.78	1.78	2.67	1.062
F2703-16-16-16-O	1	1-5/16-12	1-5/16-12	1-5/16-12	0.844	0.844	0.844	1.94	1.94	2.80	1.312

NWD Technology Fittings

MP-FO Bulkhead Straight
F2706 Series

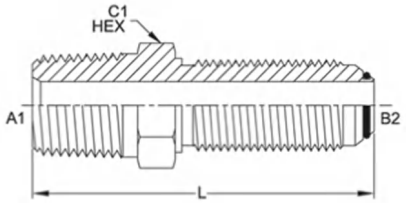

PART NO.SIZE	TUBE O.D.	A1 NPTF	B2 SAE37	A1 DRILL	B2 DRILL	L LGTH	CI HEX
F2706-12-12-O	3/4	3/4-14	1-1/16-12	0.719	0.609	2.98	1.375

Flare-O Buna O-Ring
F4003 Series

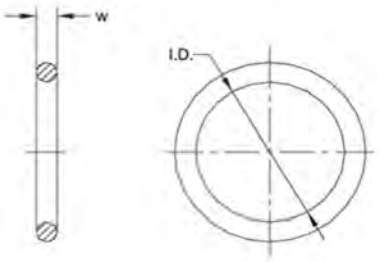

H-018

PART NO.SIZE	TUBE O.D.	W WIDTH	1.0.
F4003-04	1/4	0.040	0.176
F4003-05	5/16	0.040	0.228
F4003-06	3/8	0.040	0.295
F4003-08	1/2	0.040	0.395
F4003-10	5/8	0.040	0.492
F4003-12	3/4	0.070	0.614
F4003-14	7/8	0.070	0.739
F4004-16	1	0.070	0.884
F4003-20	1-1/4	0.070	1.114
F4003-24	1-1/2	0.070	1.364
F4003-32	2	0.103	1.862

Flare-O Viton O-Ring
F4004 Series

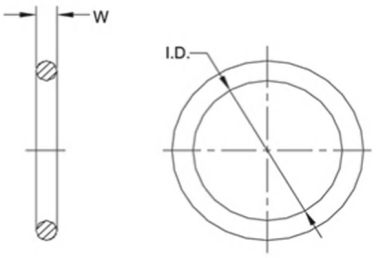

PART NO.SIZE	TUBE 0.0.	W WIDTH	I.D.
F4004-04	1/4	0.040	0.176
F4004-05	5/16	0.040	0.228
F4004-06	3/8	0.040	0.295
F4004-08	1/2	0.040	0.395
F4004-10	5/8	0.040	0.492
F4004-12	3/4	0.070	0.614
F4004-14	7/8	0.070	0.739
F4004-16	1	0.070	0.884
F4004-20	1-1/4	0.070	1.114
F4004-24	1-1/2	0.070	1.364
F4004-32	2	0.103	1.862

FO-MORB Straight
F6400-0 Series

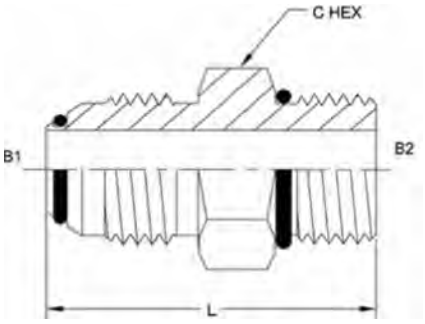

PART NO.SIZE	TUBE O.D.	B1 SAE 37	B2 SAE ORB	B1 DRILL	B2 DRILL	L LGTH	C HEX
F6400-04-02-0	1/4	7/16-20	5/16-24	0.172	0.062	1.17	0.500
F6400-04-04-0	1/4	7/16-20	7/16-20	0.172	0.172	1.23	0.562
F6400-04-05-0	1/4	7/16-20	1/2-20	0.172	0.234	1.23	0.625
F6400-04-06-0	1/4	7/16-20	9/16-18	0.172	0.297	1.29	0.688
F6400-04-08-0	1/4	7/16-20	3/4-16	0.172	0.391	1.37	0.875
F6400-04-10-0	1/4	7/16-20	7/8-14	0.172	0.484	1.49	1.000
F6400-04-12-0	1/4	7/16-20	1-1/16-12	0.172	0.609	1.66	1.250
F6400-05-04-0	5/16	1/2-20	7/16-20	0.234	0.172	1.23	0.562
F6400-05-05-0	5/16	1/2-20	1/2-20	0.234	0.234	1.23	0.625
F6400-05-06-0	5/16	1/2-20	9/16-18	0.234	0.297	1.29	0.688
F6400-06-04-0	3/8	9/16-18	7/16-20	0.297	0.172	1.27	0.687
F6400-06-05-0	3/8	9/16-18	1/2-20	0.297	0.234	1.27	0.687
F6400-06-06-0	3/8	9/16-18	9/16-18	0.297	0.297	1.30	0.688
F6400-06-08-0	3/8	9/16-18	3/4-16	0.297	0.391	1.38	0.875
F6400-06-10-0	3/8	9/16-18	7/8-14	0.297	0.484	1.50	1.000
F6400-06-12-0	3/8	9/16-18	1-1/16-12	0.297	0.609	1.66	1.250
F6400-08-04-0	1/2	3/4-16	7/16-20	0.391	0.172	1.49	0.875
F6400-08-06-0	1/2	3/4-16	9/16-18	0.391	0.297	1.44	0.812
F6400-08-08-0	1/2	3/4-16	3/4-16	0.391	0.391	1.48	0.875
F6400-08-10-0	1/2	3/4-16	7/8-14	0.391	0.484	1.60	1.000
F6400-08-12-0	1/2	3/4-16	1-1/16-12	0.391	0.609	1.76	1.250
F640008-16-0	1/2	3/4-16	1-5/16-12	0.391	0.844	1.79	1.500
F6400-10-06-0	5/8	7/8-14	9/16-18	0.484	0.297	1.71	1.000
F6400-10-08-0	5/8	7/8-14	3/4-16	0.484	0.391	1.64	1.000
F6400-10-10-0	5/8	7/8-14	7/8-14	0.484	0.484	1.70	1.000
F6400-10-12-0	5/8	7/8-14	1-1/16-12	0.484	0.609	1.86	1.250
F6400-10-16-0	5/8	7/8-14	1-5/16-12	0.484	0.844	1.89	1.500
F6400-12-08-0	3/4	1-1/16-12	3/4-16	0.609	0.391	1.94	1.125
F6400-12-10-0	3/4	1-1/16-12	7/8-14	0.609	0.484	1.88	1.125
F6400-12-12-0	3/4	1-1/16-12	1-1/16-12	0.609	0.609	1.97	1.250
F6400-12-14-0	3/4	1-1/16-12	1-3/16-12	0.609	0.719	1.96	1.375
F6400-12-16-0	3/4	1-1/16-12	1-5/16-12	0.609	0.844	1.99	1.500
F6400-12-20-0	3/4	1-1/16-12	1-5/8-12	0.609	1.078	2.08	1.875
F6400-14-12-0	7/8	1-3/16-12	1-1/16-12	0.719	0.609	1.99	1.250
F6400-14-14-0	7/8	1-3/16-12	1-3/16-12	0.719	0.719	1.99	1.375
F6400-14-16-0	7/8	1-3/16-12	1-5/16-12	0.719	0.844	2.02	1.500
F6400-16-10-0	1	1-5/16-12	7/8-14	0.844	0.484	2.07	1.375
F6400-16-12-0	1	1-5/16-12	1-1/16-12	0.844	0.609	2.04	1.375
F6400-16-16-0	1	1-5/16-12	1-5/16-12	0.844	0.844	2.04	1.500
F6400-16-20-0	1	1-5/16-12	1-5/8-12	0.844	1.078	2.12	1.875
F6400-16-24-0	1	1-5/16-12	1-7/8-12	0.844	1.312	2.20	2.125
F6400-20-16-0	1-1/4	1-5/8-12	1-5/16-12	1.078	0.844	2.33	1.688
F6400-20-20-0	1-1/4	1-5/8-12	1-5/8-12	1.078	1.078	2.17	1.875
F6400-20-24-0	1-1/4	1-5/8-12	1-7/8-12	1.078	1.312	2.24	2.125
F6400-24-20-0	1-1/2	1-7/8-12	1-5/8-12	1.312	1.078	2.53	2.125
F6400-24-24-O	1-1/2	1-7/8-12	1-7/8-12	1.312	1.312	2.37	2.125
F6400-24-32-O	1-1/2	1-7/8-12	2-1/2-12	1.312	1.781	2.53	2.750
F6400-32-24-O	2	2-1/2-12	1-7/8-12	1.781	1.312	2.94	2.625
F6400-32-32-O	2	2-1/2-12	2-1/2-12	1.781	1.781	2.78	2.750

NWD Technology Fittings

FO-MORB Straight Long
F6400-L-0 Series

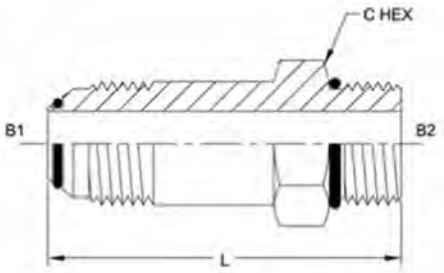

PART NO.SIZE	TUBE O.D.	B1 SAE37	B2 SAEORB	B1 DRILL	B2 DRILL	L LGTH	C HEX
F6400-L-04-04-0	1/4	7/16-20	7/16-20	0.172	0.172	2.08	0.562
F6400-L-08-08-0	1/2	3/4-16	3/4-16	0.391	0.391	2.70	0.875
F6400-L-10-10-0	5/8	7/8-14	7/8-14	0.484	0.484	3.04	1.000
F6400-L-12-12-0	3/4	1-1/16-12	1-1/16-12	0.609	0.609	3.61	1.250
F6400-L-16-16-0	1	1-5/16-12	1-5/16-12	0.844	0.844	3.98	1.500

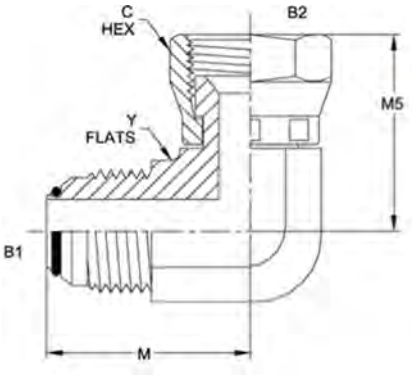

H-020

FO-FJS 90°
F6500 Series

PART NO.SIZE	TUBE O.D.	B1 SAE37	B2 SAE37	B1 DRILL	B2 DRILL	M LGTH	M5 LGTH	C HEX	Y FLATS
F6500-04-04-0	1/4	7/16-20	7/16-20	0.172	0.172	0.89	1.00	0.563	0.438
F6500-05-05-0	5/16	1/2-20	1/2-20	0.234	0.234	0.95	1.06	0.625	0.562
F6500-06-06-0	3/8	9/16-18	9/16-18	0.297	0.297	1.06	1.25	0.688	0.562
F6500-08-08-0	1/2	3/4-16	3/4-16	0.391	0.391	1.25	1.38	0.875	0.750
F6500-10-10-0	5/8	7/8-14	7/8-14	0.484	0.484	1.45	1.62	1.000	0.875
F6500-12-12-0	3/4	1-1/16-12	1-1/16-12	0.609	0.609	1.66	1.75	1.250	1.062
F6500-14-14-0	7/8	1-3/16-12	1-3/16-12	0.719	0.719	1.80	1.78	1.375	1.312
F6500-16-16-0	1	1-5/16-12	1-5/16-12	0.844	0.844	1.81	2.00	1.500	1.312
F6500-20-20-0	1-1/4	1-5/8-12	1-5/8-12	1.078	1.078	2.06	2.31	2.000	1.625
F6500-24-24-O	1-1/2	1-7/8-12	1-7/8-12	1.312	1.312	2.33	2.59	2.250	1.875
F6500-32-32-O	2	2-1/2-12	2-1/2-12	1.781	1.781	3.06	3.38	2.875	2.500

FO-FJS 45°
F6502 Series

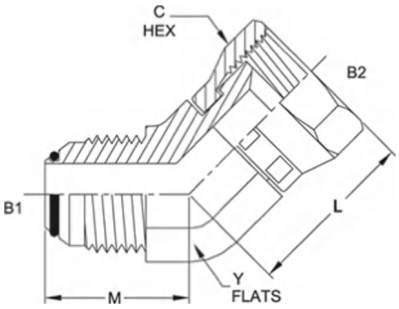

PART ND.SIZE	TUBE O.D.	B1 SAE37	B2 SAE37	B1 DRILL	B2 DRILL	M LGTH	L LGTH	C HEX	Y FLATS
F6502-04-04-0	1/4	7/16-20	7/16-20	0.172	0.172	0.72	0.94	0.563	0.438
F6502-06-06-0	3/8	9/16-18	9/16-18	0.297	0.297	0.83	1.12	0.688	0.562
F6502-08-08-0	1/2	3/4-16	3/4-16	0.391	0.391	0.98	1.28	0.875	0.750
F6502-10-10-0	5/8	7/8-14	7/8-14	0.484	0.484	1.11	1.44	1.000	0.875
F6502-12-12-O	3/4	1-1/16-12	1-1/16-12	0.609	0.609	1.28	1.50	1.250	1.062
F6502-16-16-O	1	1-5/16-12	1-5/16-12	0.844	0.844	1.47	1.75	1.500	1.312
F6502-20-20-0	1-1/4	1-5/8-12	1-5/8-12	1.078	1.078	1.59	2.03	2.000	1.625
F6502-24-24-O	1-1/2	1-7/8-12	1-7/8-12	1.312	1.312	1.78	2.25	2.250	1.875
F6502-32-32-O	2	2-1/2-12	2-1/2-12	1.781	1.781	2.22	2.91	2.875	2.500

FO-FO-FJS Tee
F6600 Series

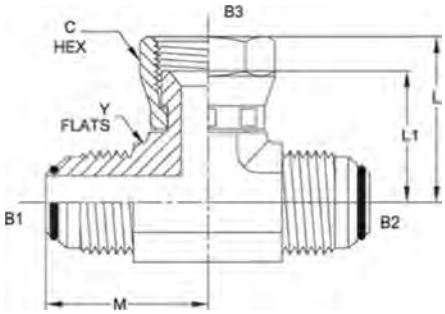

PART N0.SIZE	TUBE O.D.	B1 SAE37	B2 SAE37	B3 SAE37	B1 DRILL	B2 DRILL	B3 DRILL	M LEITH	LI LGTH	L LGTH	C HEX	Y FLATS
F6600-04-04-04-0	1/4	7/16-20	7/16-20	7/16-20	0.172	0.172	0.172	0.89	0.65	1.00	0.563	0.438
F6600-05-05-05-0	5/16	1/2-20	1/2-20	1/2-20	0.234	0.234	0.234	0.95	0.68	1.06	0.625	0.562
F6600-06-06-06-0	3/8	9/16-18	9/16-18	9/16-18	0.297	0.297	0.297	1.06	0.87	1.25	0.688	0.562
F6600-08-08-08-0	1/2	3/4-16	3/4-16	3/4-16	0.391	0.391	0.391	1.25	0.95	1.38	0.875	0.750
F6600-10-10-10-0	5/8	7/8-14	7/8-14	7/8-14	0.484	0.484	0.484	1.45	1.12	1.62	1.000	0.875
F6600-12-12-12-0	3/4	1-1/16-12	1-1/16-12	1-1/16-12	0.609	0.609	0.609	1.66	1.18	1.75	1.250	1.062
F6600-14-14-14-0	7/8	1-3/16-12	1-3/16-12	1-3/16-12	0.719	0.719	0.719	1.80	1.20	1.78	1.375	1.312
F6600-16-16-16-0	1	1-5/16-12	1-5/16-12	1-5/16-12	0.844	0.844	0.844	1.81	1.40	2.00	1.500	1.312
F6600-20-20-20-0	1-1/4	1-5/8-12	1-5/8-12	1-5/8-12	1.078	1.078	1.078	2.06	1.67	2.31	2.000	1.625
F6600-24-24-24-O	1-1/2	1-7/8-12	1-7/8-12	1-7/8-12	1.312	1.312	1.312	2.33	1.87	2.59	2.250	1.875
F6600-32-32-32-O	2	2-1/2-12	2-1/2-12	2-1/2-12	1.781	1.781	1.781	3.06	2.43	3.38	2.875	2.500

NWD Technology Fittings

FO-FJS-FO Tee
F6602 Series

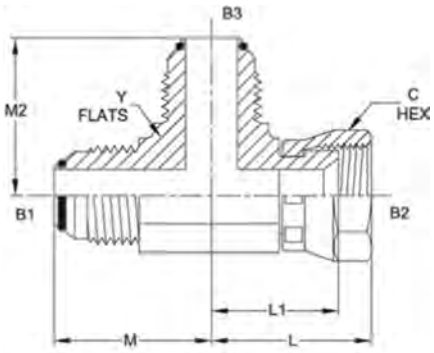

PART NO.SIZE	TUBE O.D.	B1 SAE37	B2 SAE37	B3 SAE37	B1 DRILL	B2 DRILL	B3 DRILL	M LGTH	LI LGTH	L LGTH	M2 LGTH	C HEX	Y FLATS
F6602-04-04-04-0	1/4	7/16-20	7/16-20	7/16-20	0.172	0.172	0.172	0.89	0.65	1.00	0.89	0.563	0.438
F6602-05-05-05-0	5/16	1/2-20	1/2-20	1/2-20	0.234	0.234	0.234	0.95	0.68	1.06	0.95	0.625	0.562
F6602-06-06-06-0	3/8	9/16-18	9/16-18	9/16-18	0.297	0.297	0.297	1.06	0.87	1.25	1.06	0.688	0.562
F6602-08-08-08-0	1/2	3/4-16	3/4-16	3/4-16	0.391	0.391	0.391	1.25	1.08	1.38	1.25	0.875	0.750
F6602-10-10-10-0	5/8	7/8-14	7/8-14	7/8-14	0.484	0.484	0.484	1.45	1.12	1.62	1.45	1.000	0.875
F6602-12-12-12-O	3/4	1-1/16-12	1-1/16-12	1-1/16-12	0.609	0.609	0.609	1.66	1.18	1.75	1.66	1.250	1.062
F6602-14-14-14-O	7/8	1-3/16-12	1-3/16-12	1-3/16-12	0.719	0.719	0.719	1.80	1.20	1.78	1.80	1.375	1.312
F6602-16-16-16-O	1	1-5/16-12	1-5/16-12	1-5/16-12	0.844	0.844	0.844	1.81	1.40	2.00	1.81	1.500	1.312
F6602-20-20-20-0	1-1/4	1-5/8-12	1-5/8-12	1-5/8-12	1.078	1.078	1.078	2.06	1.67	2.31	2.06	2.000	1.625
F6602-24-24-24-O	1-1/2	1-7/8-12	1-7/8-12	1-7/8-12	1.312	1.312	1.312	2.33	1.87	2.59	2.33	2.250	1.875
F6602-32-32-32-O	2	2-1/2-12	2-1/2-12	2-1/2-12	1.781	1.781	1.781	3.06	2.43	3.38	3.06	2.875	2.500

FO-MAORB 90°
F6801-NWO Series

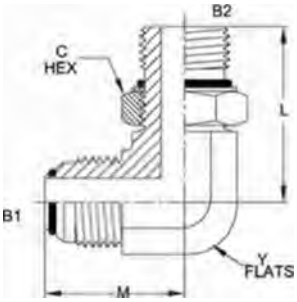

PART NO.SIZE	TUBE O.D.	B1 SAE37	B2 SAEORB	B1 DRILL	B2 DRILL	M LGTH	L LGTH	C HEX	Y FLATS
F6801 -04-04-N WO	1/4	7/16-20	7/16-20	0.172	0.172	0.89	1.03	0.563	0.438
F6801-04-05-NWO	1/4	7/16-20	1/2-20	0.172	0.234	0.95	1.13	0.625	0.562
F6801-04-06-NWO	1/4	7/16-20	9/16-18	0.172	0.297	1.05	1.25	0.688	0.562
F6801-04-08-NWO	1/4	7/16-20	3/4-16	0.172	0.391	1.12	1.45	0.875	0.750
F6801-05-04-NWO	5/16	1/2-20	7/16-20	0.234	0.172	0.95	1.13	0.563	0.562
F6801-05-05-NWO	5/16	1/2-20	1/2-20	0.234	0.234	0.95	1.13	0.625	0.562
F6801-05-06-NWO	5/16	1/2-20	9/16-18	0.234	0.297	1.05	1.25	0.688	0.562
F6801-05-08-NWO	5/16	1/2-20	3/4-16	0.234	0.391	1.12	1.45	0.875	0.750
F6801-06-04-NWO	3/8	9/16-18	7/16-20	0.297	0.172	1.06	1.19	0.563	0.562
F6801-06-05-NWO	3/8	9/16-18	1/2-20	0.297	0.234	1.06	1.19	0.625	0.562
F6801-06-06-NWO	3/8	9/16-18	9/16-18	0.297	0.297	1.06	1.25	0.688	0.562
F6801-06-08-NWO	3/8	9/16-18	3/4-16	0.297	0.391	1.14	1.45	0.875	0.750
F6801-06-10-NWO	3/8	9/16-18	7/8-14	0.297	0.484	1.22	1.70	1.000	0.875
F6801-08-04-NWO	1/2	3/4-16	7/16-20	0.391	0.172	1.25	1.26	0.563	0.750
F6801-08-06-NWO	1/2	3/4-16	9/16-18	0.391	0.297	1.25	1.32	0.688	0.750
F6801-08-08-NWO	1/2	3/4-16	3/4-16	0.391	0.391	1.25	1.45	0.875	0.750
F6801-08-10-NWO	1/2	3/4-16	7/8-14	0.391	0.484	1.33	1.70	1.000	0.875
F6801-08-12-NWO	1/2	3/4-16	1-1/16-12	0.391	0.609	1.42	1.94	1.250	1.062
F6801-10-06-NWO	5/8	7/8-14	9/16-18	0.484	0.297	1.45	1.41	0.688	0.875
F6801-10-08-NWO	5/8	7/8-14	3/4-16	0.484	0.391	1.45	1.54	0.875	0.875
F6801-10-10-NWO	5/8	7/8-14	7/8-14	0.484	0.484	1.45	1.70	1.000	0.875
F6801-10-12-NWO	5/8	7/8-14	1-1/16-12	0.484	0.609	1.54	1.94	1.250	1.062
F6801-12-08-NWO	3/4	1-1/16-12	3/4-16	0.609	0.391	1.66	1.62	0.875	1.062
F6801-12-10-NWO	3/4	1-1/16-12	7/8-14	0.609	0.484	1.66	1.78	1.000	1.062
F6801-12-12-NWO	3/4	1-1/16-12	1-1/16-12	0.609	0.609	1.66	1.94	1.250	1.062
F6801-12-14-NWO	3/4	1-1/16-12	1-3/16-12	0.609	0.719	1.77	2.00	1.375	1.312
F6801-12-16-NWO	3/4	1-1/16-12	1-5/16-12	0.609	0.844	1.76	2.05	1.500	1.312
F6801-12-20-NWO	3/4	1-1/16-12	1-5/8-12	0.609	1.078	1.97	2.25	1.875	1.625
F6801-14-12-NWO	7/8	1-3/16-12	1-1/16-12	0.719	0.609	1.80	2.00	1.250	1.312
F6801-14-14-NWO	7/8	1-3/16-12	1-3/16-12	0.719	0.719	1.80	2.00	1.375	1.312
F6801-16-12-NWO	1	1-5/16-12	1-1/16-12	0.844	0.609	1.81	2.05	1.250	1.312
F6801-16-14-NWO	1	1-5/16-12	1-3/16-12	0.844	0.719	1.81	2.05	1.375	1.312
F6801-16-16-NWO	1	1-5/16-12	1-5/16-12	0.844	0.844	1.81	2.05	1.500	1.312
F6801-16-20-NWO	1	1-5/16-12	1-5/8-12	0.844	1.078	2.01	2.25	1.875	1.625
F6801-20-14-NWO	1-1/4	1-5/8-12	1-3/16-12	1.078	0.719	2.06	2.25	1.375	1.625
F6801-20-16-NWO	1-1/4	1-5/8-12	1-5/16-12	1.078	0.844	2.06	2.25	1.500	1.625
F6801-20-20-NWO	1-1/4	1-5/8-12	1-5/8-12	1.078	1.078	2.06	2.25	1.875	1.625
F6801-20-24-NWO	1-1/4	1-5/8-12	1-7/8-12	1.078	1.312	2.20	2.39	2.125	1.875
F6801-24-20-NWO	1-1/2	1-7/8-12	1-5/8-12	1.312	1.078	2.33	2.39	1.875	1.875
F6801-24-24-NWO	1-1/2	1-7/8-12	1-7/8-12	1.312	1.312	2.33	2.39	2.125	1.875
F6801-32-32-NWO	2	2-1/2-12	2-1/2-12	1.781	1.781	3.06	2.89	2.750	2.500

NWD Technology Fittings

FO-MAORB 90° Long
F6801-L-NWO Series

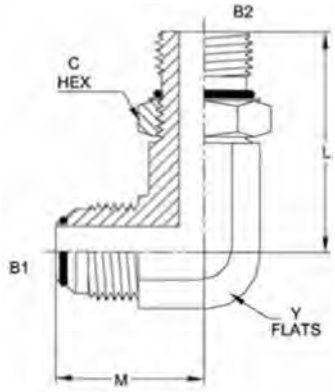

PART NO.SIZE	TUBE O.D.	B1 SAE 37	B2 SAE ORB	B1 DRILL	B2 DRILL	M LOTH	L LGTH	C HEX	Y FLATS
F6801-L-04-04-NWO	1/4	7/16-20	7/16-20	0.172	0.172	0.89	1.54	0.563	0.438
F6801-L-06-06-NWO	3/8	9/16-18	9/16-18	0.297	0.297	1.06	1.66	0.688	0.562
F6801-L-08-08-NWO	1/2	3/4-16	3/4-16	0.391	0.391	1.25	1.97	0.875	0.750
F6801-L-08-10-NWO	1/2	3/4-16	7/8-14	0.391	0.484	1.33	2.26	1.000	0.875
F6801-L-10-10-NWO	5/8	7/8-14	7/8-14	0.484	0.484	1.45	2.26	1.000	0.875
F6801-L-12-12-NWO	3/4	1-1/16-12	1-1/16-12	0.609	0.609	1.66	2.62	1.250	1.062
F6801 -L-16-16-NWO	1	1-5/16-12	1-5/16-12	0.844	0.844	1.81	3.06	1.500	1.312

FO-MAORB 90° X-Long
F6801-LL-NWO Series

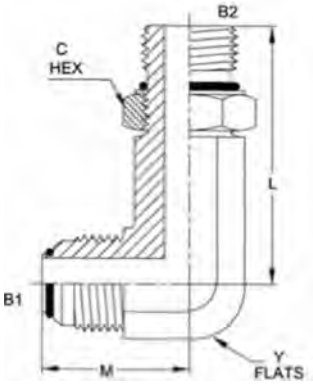

PART NO.SIZE	TUBE O.D.	B1 SAE 37	B2 SAE ORB	B1 DRILL	B2 DRILL	M LGTH	L LGTH	C HEX	Y FLATS
F6801-LL-04-04-N WO	1/4	7/16-20	7/16-20	0.172	0.172	0.89	1.73	0.563	0.438
F6801-LL-06-06-NWO	3/8	9/16-18	9/16-18	0.297	0.297	1.06	2.08	0.688	0.562
F6801-LL-06-08-NWO	3/8	9/16-18	3/4-16	0.297	0.391	1.14	2.48	0.875	0.750
F6801-LL-08-08-NWO	1/2	3/4-16	3/4-16	0.391	0.391	1.25	2.48	0.875	0.750
F6801-LL-10-10-NWO	5/8	7/8-14	7/8-14	0.484	0.484	1.45	2.89	1.000	0.875
F6801 -LL-12-12-NWO	3/4	1-1/16-12	1-1/16-12	0.609	0.609	1.66	3.34	1.250	1.062
F6801-LL-16-16-NWO	1	1-5/16-12	1-5/16-12	0.844	0.844	1.81	3.72	1.500	1.312

FO-MAORB 45°
F6802-NWO Series

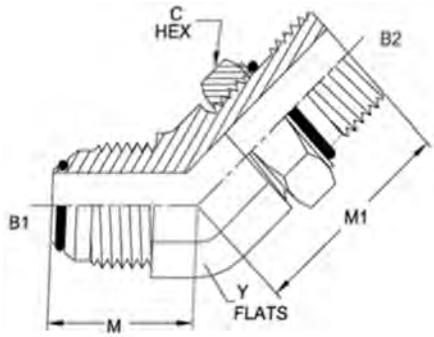

PART NO.SIZE	TUBE O.D.	B1 SAE37	B2 SAEORB	B1 DRILL	B2 DRILL	M LGTH	MI LGTH	C HEX	Y FLATS
F6802-04-04-NWO	1/4	7/16-20	7/16-20	0.172	0.172	0.72	1.05	0.563	0.438
F6802-05-05-NWO	5/16	1/2-20	1/2-20	0.234	0.234	0.77	1.05	0.625	0.562
F6802-06-06-NWO	3/8	9/16-18	9/16-18	0.297	0.297	0.83	1.14	0.688	0.562
F6802-06-08-NWO	3/8	9/16-18	3/4-16	0.297	0.391	0.87	1.30	0.875	0.750
F6802-08-06-NWO	1/2	3/4-16	9/16-18	0.391	0.297	0.98	1.17	0.688	0.750
F6802-08-08-NWO	1/2	3/4-16	3/4-16	0.391	0.391	0.98	1.30	0.875	0.750
F6802-08-10-NWO	1/2	3/4-16	7/8-14	0.391	0.484	0.99	1.52	1.000	0.875
F6802-10-08-NWO	5/8	7/8-14	3/4-16	0.484	0.391	1.11	1.36	0.875	0.875
F6802-10-10-NWO	5/8	7/8-14	7/8-14	0.484	0.484	1.11	1.52	1.000	0.875
F6802-12-10-NWO	3/4	1-1/16-12	7/8-14	0.609	0.484	1.28	1.57	1.000	1.062
F6802-12-12-NWO	3/4	1-1/16-12	1-1/16-12	0.609	0.609	1.28	1.73	1.250	1.062
F6802-12-16-NWO	3/4	1-1/16-12	1-5/16-12	0.609	0.844	1.42	1.86	1.500	1.312
F6802-14-14-NWO	5/8	1-3/16-12	1-3/16-12	0.719	0.719	1.45	1.86	1.375	1.312
F6802-16-12-NWO	1	1-5/16-12	1-1/16-12	0.844	0.609	1.47	1.86	1.250	1.312
'F6802-16-16-NWO	1	1-5/16-12	1-5/16-12	0.844	0.844	1.47	1.86	1.500	1.312
'F6802-16-20-NWO	1	1-5/16-12	1-5/8-12	0.844	1.078	1.54	1.91	1.875	1.625
'F6802-20-20-NWO	1-1/4	1-5/8-12	1-5/8-12	1.078	1.078	1.59	1.91	1.875	1.625
'F6802-24-24-NWO	1-1/2	1-7/8-12	1-7/8-12	1.312	1.312	1.78	1.91	2.125	1.875
'F6802-32-32-NWO	2	2-1/2-12	2-1/2-12	1.781	1.781	2.22	1.86	2.750	2.500

FO-FO-MAORB
Branch Tee
F6803-NWO Series

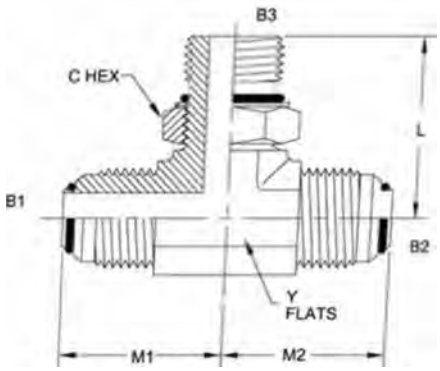

PART NO.SIZE	TUBE 0.0.	B1 SAE37	B2 SAE37	B3 SAEORB	B1 DRILL	B2 DRILL	B3 DRILL	MI LGTH	M2 LGTH	I LGTH	C HEX	y FLATS
F6803-04-04-04-NWO	1/4	7/16-20	7/16-20	7/16-20	0.172	0.172	0.172	0.89	0.89	1.03	0.563	0.438
F6803-05-05-05-NWO	5/16	1/2-20	1/2-20	1/2-20	0.234	0.234	0.234	0.95	0.95	1.13	0.625	0.562
F6803-06-06-06-NWO	3/8	9/16-18	9/16-18	9/16-18	0.297	0.297	0.297	1.06	1.06	1.25	0.688	0.562
F6803-08-08-08-NWO	1/2	3/4-16	3/4-16	3/4-16	0.391	0.391	0.391	1.25	1.25	1.45	0.875	0.750
F6803-10-10-10-N WO	5/8	7/8-14	7/8-14	7/8-14	0.484	0.484	0.484	1.45	1.45	1.70	1.000	0.875
F6803-12-12-12-N WO	3/4	1-1/16-12	1-1/16-12	1-1/16-12	0.609	0.609	0.609	1.66	1.66	1.94	1.250	1.062
F6803-14-14-14-NWO	7/8	1-3/16-12	1-3/16-12	1-3/16-12	0.719	0.719	0.719	1.80	1.80	2.00	1.375	1.312
F6803-16-16-16-N WO	1	1-5/16-12	1-5/16-12	1-5/16-12	0.844	0.844	0.844	1.81	1.81	2.05	1.500	1.312
F6803-20-20-20-NWO	1-1/4	1-5/8-12	1-5/8-12	1-5/8-12	1.078	1.078	1.078	2.06	2.06	2.25	1.875	1.625
F6803-24-24-24-NWO	1-1/2	1-7/8-12	1-7/8-12	1-7/8-12	1.312	1.312	1.312	2.33	2.33	2.39	2.125	1.875

NWD Technology Fittings

FO-MAORB-FO
Run Tee
F6804-NWO Series

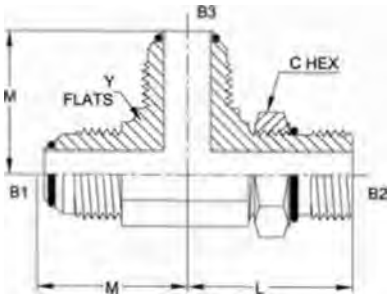

PART ND.SIZE	TUBE O.D.	B1 SAE37	B2 SAE ORB	B3 SAE 37	B1 DRILL	B2 DRILL	B3 DRILL	M LGTH	L LGTH	C HEX	Y FLATS
F6804-04-04-04-NWO	1/4	7/16-20	7/16-20	7/16-20	0.172	0.172	0.172	0.89	1.03	0.563	0.438
F6804-05-05-05-NWO	5/16	1/2-20	1/2-20	1/2-20	0.234	0.234	0.234	0.95	1.13	0.625	0.562
F6804-06-06-06-NWO	3/8	9/16-18	9/16-18	9/16-18	0.297	0.297	0.297	1.06	1.25	0.688	0.562
F6804-08-08-08-NWO	1/2	3/4-16	3/4-16	3/4-16	0.391	0.391	0.391	1.25	1.45	0.875	0.750
F6804-10-10-10-N WO	5/8	7/8-14	7/8-14	7/8-14	0.484	0.484	0.484	1.45	1.70	1.000	0.875
F6804-12-12-12-NWO	3/4	1-1/16-12	1-1/16-12	1-1/16-12	0.609	0.609	0.609	1.66	1.94	1.250	1.062
F6804-14-14-14-NWO	7/8	1-3/16-12	1-3/16-12	1-3/16-12	0.719	0.719	0.719	1.80	2.00	1.375	1.312
F6804-16-16-16-NWO	1	1-5/16-12	1-5/16-12	1-5/16-12	0.844	0.844	0.844	1.81	2.05	1.500	1.312
F6804-20-20-20NWO	1-1/4	1-5/8-12	1-5/8-12	1-5/8-12	1.078	1.078	1.078	2.06	2.25	1.875	1.625
F6804-24-24-24-NWO	1-1/2	1-7/8-12	1-7/8-12	1-7/8-12	1.312	1.312	1.312	2.33	2.39	2.125	1.875

Brennan	Aeroquip	Dayco	Flodar	Form rite	Gates	Imperial	L&L	Lenz	Parker Tube	Parker Hose	Piper	SSP	Strato Flex	Trident	United Tech	Weather Head
0302	—	302	—	50	—	—	37-15S	—	—	—	—	—	1286	1326	—	—
0304	221000	304	H18	25242	—	—	37-15	2205-S	—	—	—	—	1287	1327	—	C5115
0304-C	210292	304-C	A66	16	FJ-CAP	830-FS	37-16	2205-C	FNTX	06CP	520	JZ	1229	1329	820	C5129
0306	210212	306	A17	—	—	711-BH-FS	37-N	3208	WIN	53N	—	BN	1284	1332	894	C5624
030E-N	210295	306-N	R17	—	TLN-711-FS0	711-FSO	SAN	—	—	—	—	—	1296	1330	—	-
0318	1290	318	AI8	37	TSN	841-FS	37-15A	3205	BTX	06B	—	IN	1253	1311	818	C5105
0319	900605	319	A19	38	TS	840-FS	37-SL	3165	TX	06S	—	IS	1244	1253	819	C5165
0403	73014	403	—	20604	—	—	—	—	—	—	—	—	2333	1403	—	-
0403-TS																
0404	73056	404	—	20605	—	—	—	—	—	—	—	—	—	1404	—	-
0405	FF1131	—	—	—	—	—	—	—	—	—	—	—	—	1502	—	-
0406																
0500	FF1131	500	—	20614	—	—	—	—	—	—	—	—	—	1500	—	
0501																
0600	FF1404	600	—	20615	—	—	—	—	—	—	—	—	—	1600	—	-
0601																
0602																
0702																
0800																
0801																
0900																
0954																
0954-L																
1404	2045-[R]	53	SN1000	—	MP-FPX	60SA	PSU-2	M-UAD	0107	—	1400	PSC	1210	1210	42-[R]	9205-[R]
1405	2046-[R]	54	SN1100	—	FP-FPX	60SG	PSU-3	F-UAD	0207	—	1500	PSFC	1029	1212	23-[R]	6255-[R]
1406	—	—	—	—	—	—	—	—	—	—	—	—	1222	—	—	-
1501	2047-[R]	55	SN2000	—	MP-FPX90	60UA	PSU-6	ME-UAD	2107	—	1490	—	1037	1218	44-[R]	9405-[R]
1501-L																
1502	MP-	56	SN2100	—	FP-FPX90	60UG	PSU-7	FE-UAD	2207	—	1590	—	1030	1216	45-[R]	9455-(R]
1503	2049-[R]	57	SN4500	—	MP-FPX45	60TA	PSU-5	MEX-UAD	3107	—	1445	—	1036	1214	35-[R]	9355-|R]
1504	2050-[R)	58	SN4510	—	FP-EPX45	60TG	PSU-55	FEX-UAD	—	—	1545	—	15854	1249	37-[R)	9385-IR]
1601	2254-[R]	61	SN3000	—	MPX-FPXT	60VC	PSU-9	MT-UAD	—	—	1430	—	15855	1258	46	9406-[R]
1602	2253-[R]	62	SN3100	—	—	60VH	PSU-10	FT-UAD	—	—	1530	—	15856	1259	47	9456-[R]
1603	2255	63	SN3200	—	—	60VJ	PSU-11	T-UAD	—	—	1630	—	15857	1223	48	9705-[R]
1604																
1700	500025-|R]	360	—	—	R-MJ-[R]	63SB	—	—	—	—	—	—	—	6100	—	- 1
1703	500023-JR]	361	—	—	FI-MI45-[R]	63TB	—	—	—	—	—	—	—	6145	—	-
1704	500024-[R]	362	—	—	R-MI90-[R]	63UB	—	—	—	—	—	—	—	6190	—	-
1800	FF5541-[R)	—	—	—	FLH6K-MI	63SF	—	—	XHQ2	—	—	—	—	6200	—	-
1803	FF5539-[R]	—	—	—	FIH6K-MI45	63TF	—	—	XVQ2	—	—	—	—	6245	—	-
1804	FF5540-[R]	—	—	—	FIH6K-MI90	63UF	—	—	XEQ2	—	—	—	—	6290	—	- 1
1901	—	—	—	—	CFHS	PA	—	—	5151HK	—	—	—	—	—	—	-
1902	—	—	—	—	FHHS	PH	—	—	HFHFHK	—	—	—	—	—	—	-
1951																
1952																

Interchange Chart

Brennan	Aeroquip	Oayco	Flodar	Formrite	Gates	Imperial	L&L	Lenz	Parker Tube	Parker Hose	Piper	SSP	Strata Flex	Trident	United Tech	Weather Head
1961																
1962																
1971																
1972																
| 2111																
| 2112																
2113																
2114																
I 2115																
2116																
2117																
2118																
2119																
2120																
2403	2027	2403	AC1200	4	MJ-MJ	842-FS	37-4	3305	HTX	0303	400-SH	JU	1019	1204	811	C5305
2403-LH	202712	2304-LH	–	–	–	842-H-FS	37-4LH	3305-LH	LHTX	03L3	410-LH	1LHU	–	1204-m	815	C5306
2404	2021-IR1	2404	AC1000	2	MI-MP	848-FS	37.2	3105	FTX	0103-[R)	100	JC	1012-[R]	1202-[R]	816	C5205
2404-1	202113-[R1	–	–	–	–	848L-FS	37-12	–	–	–	–	–	1091-[R]	1202-L0-[Rj	—	—
2404-IL	2Q2114-1R1	–	–	–	–	–	37-LX2	–	–	–	–	–	1098-rm	1202-LL-fR]	–	–
2405	2022-[RJ	2405	AC1100	3	MJ-FP	846-FS	37-3	3255	6TX	0203-[R]	200	JFC	1015-[R]	1230-[R]	887	C5255
2406	2215	2406	AC55	–	–	883-FS	37-TR	3145**	TRTX**	0603**	530	JTER	—	1246	892	C5015
2408	900599	2408	A77	17	MJ-PLUG	839-FS	37-17	3105-P	PNTC	03CP	500	JP	1227	1254	806	C5229
2500	2039	2500	AC2200	8	–	855-FS	37-8	3505	ETC	2303	490	IE	1039	1234	821	C5505
2501	2024-[R]	2501	AC2000	6	MJ-MP90	849-FS	37-6	3405	CTC	2103-[R)	190	IME	1025-[R]	1208-IR]	822	C5405
2501-L	202411-[R]	2501-L	AC201L	58	–	849-L-FS	37L-6	3405-L	CCTC	5603-[R]	190-L	–	1092-[R]	1208-L-[Rj	875	C5425
2501-LL	202413-IR]	2501-LL	AC202L	56	–	849-LL-FS	37LX-6	3405-LL	ccax	5703-IR)	190-XL	–	1099-[R]	120841-(Rj	876	C5435
2501-LLI	202414-JR)	–	AC203L	–	–	–	37LLX-6	3405-LLI	–	–	–	–	16969-[R]	—	—	
2502	2025-1R]	2502	AC2100	7	MJ-FP90	850-FS	37-7	3455	OTC	2203-IRI	290	JFE	1027-[R]	1242-IRJ	886	C5455
2503	2023-(R]	2503	AC4500	5	MJ-MP45	854-FS	37-5	3355	VTC	3103-[RJ	145	JME-45	1021-[R]	1206-[R]	823	C5365
2504	–	–	–	–	–	–	37-54	–	–	–	–	–	—	—	—	—
2505	2044-IR]	–	–	–	–	–	37-55	–	–	–	–	–	–	–	—	-
2601	2030-[R]	2601	AC3000	9	MJ-MP-MJ	845-FS	37-9	3605	SIX	213T-[R]	130	JTTM	1033-[R]	1221-JR)	825	C5605
2602	2031-[R]	2602	AC3100	10	–	858-FS	37-10	3655	OTX	223T-[R)	230	inF	1034-[R]	1228-JR]	889	C5655
2603	2033	2603	AC3200	11	MI-MJ-MI	844-FS	37-11	3705	ITC	033T	430	JT	1031	1220	824	C5705
2605	2028-IRI	2605	AC3300	12	–	851-FS	37-12	3755	RTC	013T-IR1	120	JTMT	1032-IR1	1224-IR]	826	C5755
2606	2029-1R]	2606	AC3400	–	–	857-FS	37-13	3805	MTC	023T-IR]	220	JTFT	1035-[R]	1226-IRJ	888	C5805
2607	203007-IR1	–	–	–	–	–	37-26	3895	–	–	–	–	–	–	—	-
2608	203006-[R]	2608	–	–	–	–	37-27	3885	–	–	–	–	–	–	–	-
2609	203104-IR]	–	–	–	–	–	37-28	3935	–	–	–	–	—	—	—	-
2610	202832-1R]	–	–	–	–	–	37-30	3875	–	–	–	–	—	—	—	-
2611	203103-IR]	–	–	–	–	–	37-29	3915	–	–	–	–	–	—	—	-
2612	202901	–	–	–	–	–	37-31	3925	–	–	–	–	—	—	—	-
2613	203301	–	–	32	–	–	37-32	3865	–	–	–	–	–	–	–	-
2650	2020	2650	AC4200	–	–	852-FS*	37-14	3855	KTC	033X	440	IX	1009	1229	827	C5955
2651																

Brennan	Aeroquip	Dayco	Flodar	Form rite	Gates	Imperial	L&L	Lenz	Parker Tube	Parker Hose	Piper	SSP	Strato Flex	Trident	United Tech	Weather Head
2652																
2653																
2654																
2700	2041-1R1*	2700	AC1009	104	MJ-BKHD	855-BH-FS*	37-104	3905*	WTX	0353*	1000	JBU	1000*	1260	832	C5325
2701	2043-iRI*	2701	AC1209	108	–	854-BH-FS*	37-108	3955*	WETX	2353*	1090	1BE	1002*	1262	833	C5525
2702	2042*	2702	AC4529	–	–	870fS*	37-105	3945*	WNTX	3353*	1045	IBE-45	1001*	1261	837	C5375
2703	203002'	2703	AG209	–	–	–	37-111	3965*	WIT	543T*	1030	JBBT	1003*	1283	834	C5725
2704	203008*	2704	AG309	–	–	–	–	–	WJIT	533T*	–	–	–	1284	804	C5726
2705	2239*	2705-[R]	AC1109-[R]	–	–	–	37-103	3985-[R]	WGTX	0253*	–	JBFC	—	—	870-[R]	C5275
2706	2240*	2706- [R]	AC1009-[R]	–	–	–	–	3995-[R]	–	–	–	JBC	—	—	—	-
3051	–	–	–	–	–	–	–	–	–	–	–	–	1243C	–	–	
3474	–	–	–	–	–	–	–	–	F50F50	0505	–	6CU	—	1286	–	-
4000																
4001																
4004	22617	–	RB	22013	–	710-FS0	–	–	–	711509	–	–	1249	2030	629	7629
4404	–	–	–	HI	–	–	AM-180	–	–	–	900	–	15851	1041-[R]	840	-
4501	FF1162-[R]	4501	–	23916	–	–	AM-90	–	–	–	990	–	15853	1045-[R]	842	-
4503	–	–	–	–	–	–	AM-45	–	–	–	945	–	15852	1043-[R]	844	-
4504																
4505																
4506																
4601	FF1167-JR]	4601	–	–	–	–	AMSA-90	–	–	–	890	–	—	1046-[R]	845	-
4603	FF1168-[R]	4603	–	–	–	–	AMSA-45	–	–	–	845	–	—	1040-[R]	846	-
4604	–	4604	–	–	–	–	AMSA-180	–	–	–	800	–	—	1044-[R]	—	-
5000	2096	5000	PF11	–	FP-FP	24-SJ	PC-13	PC	GG	0202	1300	HC	1008	1273	847	C3309
5304																
5316																
5404	2083	5404	PF10	–	MP-MP	24-SA	PC-11	PN	FF	0101	1150	HN	1042	1252	910	C3069
5404-N	2084	–	PF102	–	–	–	–	–	FFF	–	–	HN	—	—	911	-
5405	2040	5405	PF110	–	MP-FPL	24-SG-IR]	–	PRC	FG-[R)	0201-[R]	1110	RA	1050	1274	920- [R]	C3209-IR)
5406	2081	5406	PF101	247	MP-FPS	24-SB	HB	HB	PTR	0102	1120	PTR	1093	1250	912	C3109
5406-C																
5406-HP	2222	–	PFH60	248	–	24-SR	–	HHP	HHP	01HP	–	–	–	–	–	C3169
5406-P	2082	5406-P	PFHP60	–	MP-PLUG	–	HP	HP	HP	01 CP	1100	HP	1219	1251	933	C3159
5406-SHP																
5500	2085	5500	PF20	217	MP-MP90	25-UA	PC-17	MPE	CR	2101	1190	MM	1094	1275	919	C3529
5501	2247	5501	PF50	–	–	–	PC-14	–	–	–	–	–	–	–	—	-
5502	2089	5502	PF201	218	MP-FP90	25-UG	PC-18	SE	CD	2102	1290	MF	1095	1243-IR]	914	C3409
5503	2088	5503	PF501	–	–	25-TG	PC-15	45-SE	CD-45	3102	1245	MF-45	1096	1244	915	C3359
5504	2087	5504	PF21	219	–	25-UJ	PC-19	FPE	DD	2202	1390	FF	1097	1245	916	C3509
5505		5505	PF51	–	–	–	PC-16	–	DD-45	4202	–	FF-45	–	1241	928	C3559
5600	2257	–	PF30	220	FP-FP90	–	PC-20	MPT	RRS	–	–	MMM	–	–	–	-
5601	2256	–	PF3001	–	–	–	PC-23	MRT	–	–	–	–	15861	–	–	-
5602	2092	5602	PF3011	224	–	25-VK	PC-24	ST	MRO	012T	1220	FMF	16970	1276	902	C3759
5603	2093	5603	PF3010	–	–	–	PC-21	MST	MMO	–	–	–	16913	1277	—	—

Interchange Chart

Brennan	Aeroquip	Oayco	Flodar	Formrite	Gates	Imperial	L&I	lenz	Parker Tube	Parker Hose	Piper	SSP	Strata Flex	Trident	United Tech	Weather Head
5604	2091	5604	PF3110		FP-FP-MP	25-VC	PC-22	FRT	KMMOO	212T	1230	FFM	15862	1278	904	C3609
5605	2090	5605	PF31	225	FP-FP-FP	25-VJ	PC-25	PT	—	022T	1330	FFF	—	1225	917	C3709
5650																
5651	208004	—	—	—	—	—	—	—	—	–	–	–	–	–	–	-
5652	2080	5652	PF41	—	—	25-WJ	PC-41	FPC	—	022X	1340	FFFF	15850	1279	918	C3959
5653																
5655	208007	—	PF40111	—	—	—	PC-24	–	–	–	–	–	—	–	–	-
5700	2251	—	—	—	—	—	SPC-17	–	–	–	–	–	—	—	–	-
5701	2249-IR]	—	—	—	—	—	S37-6	–	—	–	–	–	–	—	–	9453
5702	2252	—	—	—	—	833-FS	SPC-18	–	–	–	–	–	—	—	—	-
6000	—	—	—	—	—	—	—	A3105	—	–	–	–	–	–	—	-
6400	202702-IR]	6400	RAC1000	62	MB-MJ	848-FSO	SA-2	A3105L	F50X	0503-IR]	700	JGC	1040-IR)	1231	850	C5312
6400-L	202713-[R]	6400-1	RAC101L	—	—	848L-FS0	SA-L2	–	FF50X	E503	–	–	15867-[R]	1231-10	851	C5316
6401	—	6401	R1000	—	—	—	SAPC-11	APN	F5F	–	380	–	—	1264-IR)	29	C3249
6402	2266	—	—	—	—	—	—	–	F65X	–	–	–	–	1213	–	9316
6404	2246-IR]	6404	—	—	—	—	—	—	FH65	–	300	–	—	1267-IR)	31	C3239
6405	2216-IR]	6405	R1100	—	MB-FP	720-FS0	SAPC-12	APC	F50G	502	360	GCF	16339-[R]	1268-[R]	32	C3269
6408	900598	6408	R77	64	MB-PIUG	721 -FSO	SA-17	A3105P	P50N	05CP	510	GP	1228	1255	33	7237
6408-H	FF2138	—	R771	—	—	—	SA-17SH	—	HP50N	05HP	510	CGP	–	1256	–	7238
6410	FF1010	6410	SAE11	—	—	719-FSO	—	—	F50G5	510	340	–	–	1270	–	7033
6420																
6425																
6464																
6500	2071-IR]	6500	RASC2000	71	MJ-FIX90	879-FS	SW-6	3505-SW	C6X	3903	690	JSE	1005	1236	863	C5506
6500-L																
6501	2250	6501	RMSC2000	—	—	—	SWPC-17	—	—	–	660	–		1247-IR]	–	TF5406
6502	2070-(R]	6502	RASC4500	—	MI-FJX45	889-FS	SW-5	3355-SW	V6X	3703	645	JSE-45	1004	1237	874	C5356
6503																
6504	—	—	—	—	—	—	—	—	—	–	–	–	–	1205	862	-
6505	2018	60	—	—	—	881-F$-[R]	—	—	F6X	–	–	–	–	1211	–	9100-[R]
6506	2242	66	—	—	—	882-FS-[R]	—	—	—	–	–	–	–	1215	–	-
6565																
6600	203101-IR]	6600	RASC3000	72	—	872-FS	SW-9	3605-SW	S6X	393T	630	ISBT	1006	1227	865	C5707
6602	203102-IRJ	6602	RASC3300	73	MI-FIX-MI	871-FS	SW-12	3755-SW	R6X	063T	620	ISRT	1007	1248	864	C5706
6603																
6604																
6605																
6606																
6701																
6801	2062-IR]	6801	RAC2000	66	MB-MI90	849-FSO	SA-6	A3405	C50X	2503-IR)	790	JGE	1048-IR]	1238-IR]	853	C5515
6801 -I	—	6801-L	—	—	—	—	SAL-6	A3405L	—	–	–	–	–	1238-10-1R)	–	-
6801-LL	206209-IR)	—	—	—	—	—	SASLX-6	A3405LL	—	—	–	–	–	1238-LL-IRJ	C-5365	-
6801-ILL																
6802	2061-IR]	6802	RAC4500	65	MB-MI45	854-FSO	SA-5	A3355	V50X	3503-fRI	745	JGE-45	1047-IRI	1240-IR]	852	C5365
6803	203003-(RJ	6803	RAC3000	69	—	845-FSO	SA-9	A3605	S50X	253T	730	IGBT	1089	1265-[RJ	855	C5715

Brennan	Aeroquip	Dayco	Flodar	Formrite	Gates	Imperial	L&L	Lenz	Parker Tube	Parker Hose	Piper	SSP	Strato Flex	Trident	United Tech	Weather Head
6804	203005-iRI	6804	RAG300	67	851-fSO	851-FSO	SA-12	A3755	R50X	053T	720	)GRT	1090	1266-fRI	854	C5716
6805	206801-IR1	6805	RF2100	—	—	—	SAPC-18	—	AEOG	2502	760	—	—	1269	56	0459
6805-L	206804-IR1	—	—	—	—	—	—	—	AE40G	5502	—	—	—	—	—	0469
6806	—	6806	RM2000	—	—	—	—	—	—	—	780	—	—	1263	57	TF3569
6807	—	—	—	—	—	—	—	—	—	—	—	—	—	—	—	- !
6808																
6807-LL																
6809	—	—	—	—	—	—	—	—	—	—	—	—	—	—	—	-
6810																
6815																
6832																
6840																
6850																
6900	2066-IR]	59	SNR1000	—	MB-FPX	60-SB	SASU-2	SM-UAD	—	507	1700	—	15858-IR]	1235	38	9315
6901	2068-IR1	64	SNR2000	—	MB-FPX90	60-UB	SASU-6	SME-UAD	—	2507	1790	—	15860-IR1	1271	39	9515
6902	2067-IR]	65	SNR4500	—	MB-FPX45	60-TB	SASU-5	—	—	3507	1745	—	15859-iRI	1272	40	9365
7000																
7002																
7003																
7004																
7005																
7005-L																
7005-S																
7007-L																
7007-S																
7008																
7008-F																
7009																
7009-F																
7022																
7023																
7025																
7030																
7032																
7033																
7034																
7040																
7042																
7045																
7062																
7100																
7102-NW0																
7200																
7202-NW0																
7204																

Interchange Chart

Brennan	Aeroquip	Dayco	Flodar	Form rite	Gates	Imperial	L&L	Lenz	Parker Tube	Parker Hose	Piper	SSP	Strato Flex	Trident	United Tech	Weather Head
7205-NW0																
7220																
7222																
7588-P																
7599-P																
7888-C																
7699-C																
8055																
8080																
8088																
8180																
8280																
8555-H																
8555-P																
8800																
9000																
9001																
9002																
9020																
9022																
9023																
9024																
9025																
9033																
9124																
9222																
9224																
9224-L																
9322																
9344																
9500-P																
9522-H																
9522-P																
9644-C																
9722-LN																
9900																
9925																
C0304-C	—	—	—	—	—	—	—	—	FUN	—	—	MZ	—	—	—	7141
C0304	—	—	—	—	—	—	—	—	—	—	—	—	—	—	—	-
C0306	—	—	—	—	—	—	—	—	WIN	—	—	BN	—	—	—	7936
C0318	—	—	—	—	—	—	—	—	BU	—	—	MN	—	—	—	7117
C0319	—	—	—	—	—	—	—	—	TU	—	—	MS	—	—	—	7176
C2402																
C2403	—	—	—	—	—	—	—	—	HBU	—	—	MU	—	—	—	7317
C2403-LH	—	—	—	—	—	—	—	—	WBU	—	—	MLHU	—	—	—	7318

Brennan	Aeroquip	Dayco	Flodar	Formrite	Gates	Imperial	I&L	Lenz	Parker Tube	Parker Hose	Piper	SSP	Strato Flex	Trident	United 1 Tech	Weather Head
C2404	—	—	—	—	—	—	—	—	FHU	—	—	MC	—	—	—	7217
C2405	—	—	—	—	—	—	—	—	GBU	—	—	MFC	—	—	—	7267
C2406																
C2408																
C2500	—	—	—	—	—	—	—	—	EBU	—	—	ME	—	—	—	7517
C2501	—	—	—	—	—	—	—	—	CBU	—	—	MME	—	—	—	7417
C2501-L	—	—	—	—	—	—	—	—	—	—	—	—	—	—	—	7437
C2501-U	—	—	—	—	—	—	—	—	—	—	—	—	—	—	—	7447
C2502	—	—	—	—	—	—	—	—	DBU	—	—	MFE	—	—	—	7467
C2503	—	—	—	—	—	—	—	—	VBU	—	—	MME-45	—	—	—	7367
C2504																
C2B01	—	—	—	—	—	—	—	—	SBU	—	—	MTTM	—	—	—	7617
C2602	—	—	—	—	—	—	—	—	OBU	—	—	MTTF	—	—	—	7667
C2603	—	—	—	—	—	—	—	—	IBU	—	—	MT	—	—	—	7717
C2605	—	—	—	—	—	—	—	—	RBU	—	—	MTMT	—	—	—	7767
C2606	—	—	—	—	—	—	—	—	MBU	—	—	MTFT	—	—	—	7817
C2B50	—	—	—	—	—	—	—	—	KBU	—	—	MX	—	—	—	7967
C2700	—	—	—	—	—	—	—	—	WBU	—	—	MBU	—	—	—	7337
C2701	—	—	—	—	—	—	—	—	—	—	—	—	—	—	—	7537
C2702	—	—	—	—	—	—	—	—	—	—	—	—	—	—	—	-
C2703	—	—	—	—	—	—	—	—	—	—	—	—	—	—	—	-
C2704	—	—	—	—	—	—	—	—	—	—	—	—	—	—	—	-
12706	—	—	—	—	—	—	—	—	—	—	—	—	MBC	—	—	-
12707																
C6400	—	—	—	—	—	—	—	—	—	F5BU	—	—	MGC	—	—	7327
C6400-L	—	—	—	—	—	—	—	—	—	—	—	—	—	—	—	7328
CS500	—	—	—	—	—	—	—	—	—	C6BU	—	—	MSE	—	—	7518
C6502	—	—	—	—	—	—	—	—	—	—	—	—	MSE-45	—	—	7368
C6600	—	—	—	—	—	—	—	—	—	S6BU	—	—	MSBT	—	—	7719
C6602	—	—	—	—	—	—	—	—	—	R6BU	—	—	MSRT	—	—	7718
C8801-NW0	—	—	—	—	—	—	—	—	—	C5BU	—	—	M6E	—	—	7527
C8802-NWO	—	—	—	—	—	—	—	—	—	V5BU	—	—	MGE-45	—	—	7377
C8803-NWO	—	—	—	—	—	—	—	—	—	S5BU	—	—	MG8T	—	—	7727
CS804-NWO	—	—	—	—	—	—	—	—	—	R5BU	—	—	MGRT	—	—	7728
FS0304-C	FF9863	—	—	—	—	830-TT	—	—	FNL	—	—	—	—	—	—	4129
FSO306	FF9768	—	—	—	—	711BH-TT	—	—	WLNL	—	—	—	—	—	—	4924
FS0318	FC2326	—	—	—	—	841-TT	—	—	BL	—	—	—	—	—	—	4105
FS0319	FC1229	—	—	—	—	840-TT	—	—	TI	—	—	—	—	—	—	4165
FS0403	FF1851T	—	—	—	—	834-TT	—	—	LHB30	—	—	—	—	—	—	-
FS1700																
FS1703																
FS1800																
FS1803																
FS1805																
FS2403	FF2000T	—	—	—	—	—	—	—	HLO	—	—	—	—	—	—	4305

Interchange Chart

Brennan	Aeroquip	Dayco	Flodar	Form rite	Gates	Imperial	L&L	Lenz	Parker Tube	Parker Hose	Piper	SSP	Strato Flex	Trident	United Tech	Weather Head
FS2404	FF2031T	--	–	–	–	848-TT	–	–	ao	–	–	--	--	--	--	4205
FS2406	FF2281T	–	–	–	–	883-TT	–	–	TRLO	–	–	—	—	—	—	4015
FS24Q8	FF9767	–	–	–	–	839-TT	–	–	PNLO	–	–	—	—	–	—	4229
FS2500	FF2035T	–	–	–	–	855-TT	–	–	ao	–	–	—	—	—	–	4505
FS2501	FF2032T	–	–	–	–	849-TT	–	–	ao	–	–	—	—	–	–	-
FS2503	FF2093T	–	–	–	–	854-TT	–	–	–	–	–	–	—	—	—	-
FS2601	FF2001T	–	–	–	–	–	–	–	–	–	–	–	—	—	—	-
FS2B03	FF1898T	–	–	–	–	844-TT	–	–	10	–	–	–	—	—	—	4705
FS2650	–	–	–	–	–	–	–	–	KLO	–	–	–	—	—	—	4955
FS2700	FF1994T	–	–	–	–	832-TT	–	–	WIO	–	–	–	—	—	—	4325
FS2701	FF2030T	–	–	–	–	–	–	–	wao	–	–	–	—	—	—	4525
FS2702	–	–	–	–	–	–	–	–	WNLO	–	–	–	—	—	—	-
FS2703	–	–	–	–	–	–	–	–	WJMLO	–	–	–	—	—	–	-
FS2704	–	–	–	–	–	–	–	–	WHO	–	–	–	—	–	–	4726
FS4000	FF9446	–	–	–	–	TT-77	–	–	–	–	–	–	—	–	–	4629
FSG001	FF9075	–	–	–	–	836-TT	–	–	S8R	–	–	–	–	–	–	-
FS6400	FF1852T	–	–	–	–	848-TTO	–	–	F5010	–	–	–	—	—	–	4315
FS6400-L	FF1854T	–	–	–	–	848L-TT0	–	–	FF50L0	–	–	–	—	—	—	4316
FS6402	–	–	–	–	–	–	–	–	L0HX6	–	–	–	—	—	–	4214
FS6403	–	–	–	–	–	–	–	–	XHLO	–	–	–	—	–	–	-
FS6500	FF2098T	–	–	–	–	879-TT	–	–	C6L0	–	–	–	—	—	–	4506
FSG503																
FS6504	–	–	–	–	–	–	–	–	XHL6	–	–	–	–	–	—	-
FS6S05																
FS6G0D	FF1857T	–	–	–	–	872-TT	–	–	S6L0	–	–	–	—	—	–	4707
FS6602	FF2114T	–	–	–	–	87i-rr	–	–	R610	–	–	–	—	—	–	4706
FS6801	FF1868T	–	–	–	–	849-TTO	–	–	C5010	–	–	–	—	–	–	4515
FS6801-L																
FSG801-LL																
FS6802	FF2068T	–	–	–	–	854-TTO	–	–	V50L0	–	–	–	–	–	–	4365
FS6803	FF1861T	–	–	–	–	845-TTO	–	–	$5010	–	–	–	—	—	–	4715
FS6804	FF1865T	–	–	–	–	851-TTO	–	–	R50L0	–	–	–	—	–	–	4716
FS6809	–	–	–	–	–	–	–	–	AR6	–	–	–	—	—	–	4535
FS7202																
FS7210																
FS7215																
FS7300																
FS7640																

B R E N N A N I N D U S T R I E S
Atlanta • Cleveland • Dallas • Los Angeles • Seattle

Product	Page
FS0304-C Series	B-003
FS0306 Series	B-003
FS0318 Series	B-004
FS0319 Series	B-004
FS0403 Series	B-005
FS0403-TS Series	B-005
FS0406 Series	B-006
FS2403 Series	B-006
FS2404 Series	B-007
FS2405 Series	B-007
FS2406 Series	B-008
FS2408 Series	B-008
FS2500 Series	B-009
FS2501 Series	B-009
FS2503 Series	B-010
FS2601 Series	B-010
FS2603 Series	B-011
FS2605 Series	B-011
FS2650 Series	B-011
FS2700 Series	B-012
FS2701 Series	B-012
FS2702 Series	B-013
FS2703 Series	B-013
FS2704 Series	B-014
FS2764 Series	B-014
FS4000 Series	B-014
FS4001 Series	B-015
FS6001 Series	B-015
FS6400-0 Series	B-016
FS6400-L-0 Series	B-017
FS6402 Series	B-017
FS6403-C Series	B-017
FS6410 Series	B-018
FS6500 Series	B-018
FS6502 Series	B-018
FS6503 Series	B-019
FS6504 Series	B-019
FS6505 Series	B-019
FS6540 Series	B-020
FS6564 Series	B-020
FS6565 Series	B-020
FS6600 Series	B-021
FS6602 Series	B-021
FS6801-NWO Series	B-022
FS6801-L-NWO Series	B-022
FSFS680U1-NWO Series	B-023
FS6802-NWO Series	B-023
FS6803-NWO Series	B-023
FS6803-L-NWO Series	B-024
FS6804-NWO Series	B-024
FS6809-NWO Series	B-024
FS6845-NWO Series	B-025
FS6850-NWO Series	B-025
FS6859-NWO Series	B-025
FS7002 Series	B-025
FS7005 Series	B-026
FS7202-NWO Series	B-026
FS7205-NWO Series	B-027
FS7210 Series	B-027
FS7215 Series	B-028
FS7300-NWO Series	B-028
FS7640-O Series	B-029
FS7701 Series	B-029
0302 Series	C-007
0304 Series	C-007
0304-C Series	C-008
0306 Series	C-008
0306-N Series	C-009

Product	Page
0318 Series	C-009
0319 Series	C-010
0403 Series	C-010
0403-TS Series	C-011
0404 Series	C-011
0405 Series	C-012
0406 Series	C-012
0500 Series	C-013
0501 Series	C-013
0600 Series	C-014
0601 Series	C-014
0602 Series	C-014
0702 Series	C-015
0800 Series	C-015
0801 Series	C-015
0900 Series	C-016
0954 Series	C-016
0954-L Series	C-016
1404 Series	C-017
1405 Series	C-018
1501 Series	C-019
1501-L Series	C-020
1502 Series	C-020
1503 Series	C-021
1504 Series	C-021
1601 Series	C-022
1602 Series	C-022
1603 Series	C-023
1604 Series	C-023
2111 Series	C-024
2112 Series	C-024
2113 Series	C-025
2114 Series	C-025
2115 Series	C-026
2116 Series	C-026
2117 Series	C-027
2118 Series	C-027
2119 Series	C-028
2120 Series	C-028
2403 Series	C-029
Hex 2403-LH Series	C-030
2404 Series	C-031
2404 Series	C-032
2404-L Series	C-033
FX-Long 2404-LL Series	C-033
2405 Series	C-034
2406 Series	C-035
2406 Series	C-036
2408 Series	C-037
2500 Series	C-038
2501 Series	C-038
2501 Series	C-039
2501-L Series	C-039
2501-LL Series	C-040
2501-LLL Series	C-040
2502 Series	C-041
2503 Series	C-042
2504 Series	C-043
2505 Series	C-043
2601 Series	C-044
2602 Series	C-045
2603 Series	C-046
2605 Series	C-047
2606 Series	C-048
2607 Series	C-048
2608 Series	C-049
2609 Series	C-049
2610 Series	C-050

Product	Page
2611 Series	C-050
2612 Series	C-051
2613 Series	C-051
2650 Series	C-052
2651 Series	C-052
2652 Series	C-053
2653 Series	C-053
2654 Series	C-053
2700 Series	C-054
2701 Series	C-054
2702 Series	C-055
2703 Series	C-055
2704 Series	C-056
2705 Series	C-056
2706 Series	C-057
3051 Series	C-057
3474-NWO Series	C-058
3474-LLL-NWO Series	C-058
4000 Series	C-059
4001 Series	C-059
4005 Series	C-059
4404 Series	C-060
4501 Series	C-061
4503 Series	C-062
4504 Series	C-062
4505 Series	C-063
4506 Series	C-063
4501-NWO Series	C-064
4603-NWO Series	C-065
4604-0 Series	C-066
5000 Series	C-067
304SS 5304 Series	C-067
316SS 5316 Series	C-068
5404 Series	C-068
5404-N Series	C-069
5404-N Series	C-070
5405 Series	C-071
5406 Series	C-072
5406-C Series	C-073
5406-HP Series	C-073
5406-P Series	C-074
5406-SHP Series	C-074
5500 Series	C-075
5501 Series	C-075
5502 Series	C-076
5503 Series	C-076
5504 Series	C-077
5505 Series	C-077
5600 Series	C-078
5601 Series	C-078
5602 Series	C-079
5603 Series	C-079
5604 Series	C-080
5605 Series	C-080
5650 Series	C-081
5652 Series	C-081
5653 Series	C-082
5655 Series	C-082
5700 Series	C-082
5701 Series	C-083
5702 Series	C-083
6000 Series	C-084
6316 Series	C-084
6400-0 Series	C-085
6400-0 Series	C-086
6400-L-O Series	C-087
6400-LL-O Series	C-087
6401-0 Series	C-088

Product	Page
6402-0 Series	C-089
6404 Series	C-089
6405-0 Series	C-090
6408-0 Series	C-091
6408-H-O Series	C-091
6410-0 Series	C-092
6410-0 Series	C-093
6420-0 Series	C-094
6425 Series	C-094
6464-0 Series	C-094
6464-L-O Series	C-095
6500 Series	C-095
6500-L Series	C-096
6501 Series	C-096
6502 Series	C-097
6503 Series	C-097
6504 Series	C-098
6505 Series	C-098
6506 Series	C-099
6564 Series	C-099
6565 Series	C-100
6574 Series	C-100
6600 Series	C-101
6602 Series	C-102
6603 Series	C-103
6604 Series	C-103
6605 Series	C-103
6606 Series	C-104
6701 Series	C-104
6701-L Series	C-105
6702 Series	C-105
6801-NWO Series	C-106
6801-NWO Series	C-107
6801-L-NWO Series	C-108
6801-LL-NWO Series	C-108
6801-LLL-NWO Series	C-109
6802-NWO Series	C-109
6803-NWO-FG Series	C-110
6804-NWO-FG Series	C-111
6804-L-NWO-FG Series	C-112
6805-NWO Series	C-112
6805-L-NWO Series	C-113
6806-NWO Series	C-113
6807-NWO Series	C-114
6807-LL-NWO Series	C-114
6808-NWO Series	C-114
6809-NWO Series	C-115
6810-NWO Series	C-115
6815-NWO Series	C-116
6818 Series	C-116
6820 Series	C-116
6832-NWO Series	C-117
6835 Series	C-117
6840-NWO Series	C-118
6850-NWO Series	C-118
6900-0 Series	C-119
6901-NWO Series	C-120
6902-NWO Series	C-121
6911-NWO Series	C-121
1700 Series	D-003
1703 Series	D-003
1704 Series	D-004
1710 Series	D-004
1800 Series	C-005
1803 Series	C-005
1804 Series	C-006
1810 Series	C-006
1703FG Series	C-007

Index

Product	Page
1704FG Series	D-007
1803FG Series	D-008
1804FG Series	D-008
FS1700 Series	D-009
FS1703FG Series	D-009
FS1704FG Series	D-010
FS1800 Series	D-010
FS1803FG Series	D-011
FS1804FG Series	D-011
1900-61 Series	D-012
1900-62 Series	D-012
1900-M Series	D-012
1901-61 Series	D-012
1902-62 Series	D-012
1903/1904-61 Series	D-013
1903/1904-62 Series	D-013
1914-61 Series	D-014
1914-62 Series	D-014
1927/1928-61 Series	D-015
1927/1928-62 Series	D-015
1929/1930-61 Series	D-016
1929/1930-62 Series	D-016
1933/1934 Series	D-017
1935/1936-61 Series	D-017
1935/1936-62 Series	D-017
1937/1938-61 Series	D-018
1937/1938-62 Series	D-018
1940-61 Series	D-019
1940-62 Sprips	D-019
1942/1943-61 Series	D-020
1942/1943-62 Series	D-020
1951-61 Series	D-021
1951-H Series	D-021
1952-62 Series	D-022
1952-H Series	D-022
1959-P Sprips	D-023
1961 Series	D-023
1962 Series	D-023
1971 Series	D-023
1972 Series	D-023
1965-61 Series	D-024
1965-62 Series	D-024
1967-61 Series	D-024
1967-62 Series	D-025
1979-61 Series	D-025
1979-62 Series	D-025
1990-61 Series	D-026
1990-62 Series	D-026
1990-M Series	D-026
3300/3301-61 Series	D-027
3300/3301-62 Series	D-027
Code 61 Series	D-028
Code 62 Series	D-028
For Codes 61&62 Series	D-029
C0304-C Series	E-003
C0318 Series	E-003
C0319 Sprips	E-004
C2409 Sprips	E-004
C2403 Series	E-005
C2403-LH Series	E-005
C2404 Series	E-006
C2405 Series	E-007
C2406 Series	E-007
C2408 Series	E-008
C2500 Series	E-008
C2501 Series	E-009
C2501-L Series	E-009
C2501-LL Series	E-010

Product	Page
C2502 Series	E-010
C2503 Series	E-011
C2504 Series	E-011
C2601 Series	E-012
C2602 Series	E-012
C2603 Series	E-013
C2605 Series	E-013
C2606 Series	E-014
C2650 Series	E-014
C2700 Series	E-015
C2701 Series	E-015
C2702 Series	E-016
C2703Series	E-016
C2704 Series	E-016
C2706 Series	E-017
C2707 Series	E-017
C6400-0 Series	E-018
C6400-L-0 Series	E-018
C6500 Series	E-019
C6502 Series	E-019
C6600 Series	E-019
C6602 Series	E-020
C6801-NWO Series	E-020
C6802-NWO Series	E-021
C6803-NWO Series	E-021
C6804-NWO Series	E-021
D8002 Series	E-009
D8003 Series	F-009
D8004 Series	E-010
D8005 Series	E-010
D8006 Series	E-011
D8007 Series	E-011
D8008 Series	E-012
D8020 Series	F-012
D8020-NBR Series	F-013
D8021 Series	F-014
D8030 Series	F-014
D8031 Series	F-015
D8031-NBR Series	F-016
D8032-NBR Series	F-017
D8034 Series	F-017
D8034-NBR Series	F-018
D8036 Series	F-018
D8040 Series	F-019
D8040-NBR Series	F-020
D8041 Series	F-021
D8041-NBR Series	F-022
D8043 Series	F-023
D8043-NBR Ser.ies	F-024
D8044 Series	F-025
D8044NBR Series	F-025
D8045 Series	F-026
D8046 Series	F-026
D8050 Series	F-027
D8050-NBR Series	F-028
D8051 Series	F-029
D8051-NBR Series	F-030
D8060 Series	F-031
D8060-NBR Series	F-032
D8061 Series	F-033
D8061-NBR Series	F-033
D8062 Series	F-034
D8062-NBR Series	F-035
D8067 Series	F-036
D8097 Series	F-036
D8097-NBR Series	F-037
D8233 Series	F-037
D8233-NBR Series	F-038

Product	Page
D8243 Series	F-038
D8243-NBR Series	F-039
D8250 Series	F-039
D8250-NBR Series	F-040
D8260 Series	F-040
D8260-NBR Series	F-041
D8261 Series	F-041
D8261-NBR Series	F-041
D8263 Series	F-042
D8263-NBR Series	F-042
D8269 Series	F-043
D8269-NBR Series	F-044
D8360 Series	F-045
D8360-NBR Series	F-046
D8433 Series	F-047
D8433-NBR Series	F-047
D8443 Series	F-047
D8443-NBR Series	F-048
D8463 Series	F-048
D8463-NBR Series	F-049
D8469 Series	F-049
D8469-NBR Series	F-050
D8543 Series	F-050
D8543-NBR Series	F-051
D8563 Series	F-051
D8563-NBR Series	F-052
D8569 Series	F-053
D8569-NBR Series	F-054
D8660 Series	F-055
D8660-NBR Series	F-055
7000 Series	3-003
7001 Series	3-003
7002 Series	3-004
7003 Series	3-005
7004 Series	3-005
7005 Series	3-006
7005-L Series	3-007
7005-S Series	3-007
7007-L Series	3-008
7007-S Series	3-008
7008 Series	3-009
7008-F Series	3-009
7009 Series	3-010
7009-F Series	3-010
7022 Series	3-011
7023 Series	3-011
7025 Series	3-012
7030 Series	3-012
7032 Series	3-013
7033 Series	3-014
7034 Series	3-014
7040 Series	3-015
7042 Series	3-015
7045 Series	3-016
7062 Series	3-017
7100 Series	3-018
7102 Series	3-018
7200 Series	3-019
7202-NWO Series	3-019
7204 Series	3-020
7205-NWO Series	3-020
7220 Series	3-021
7222 Series	3-021
7588-P Series	3-022
7599-P Series	3-022
7688-P Series	3-023
7699-C Series	3-023
8055 Series	3-024

Product	Page
8080 Series	G-024
8088 Series	G-025
8180 Series	G-025
8280 Series	G-025
8555-H Series	G-026
8555-P Series	G-026
8800 Series	G-027
9000 Series	G-027
9001 Series	G-028
9002 Series	G-028
9020 Series	G-029
9022 Series	G-029
9023 Series	G-030
9024 Series	G-030
9025 Series	G-031
9033 Series	G-031
9124 Series	G-032
9222 Series	G-032
9224 Series	G-033
9224-L Series	G-033
9322 Series	G-034
9344 Series	G-034
9500-P Series	G-035
9522-H Series	G-035
9522-P Series	G-036
9644-C Series	G-036
9722-LN Series	G-037
9900 Series	G-037
9925 Series	G-037
F0403 Series	H-003
F0500 Series	H-003
F0600 Series	H-004
F2403 Series	H-004
F2403-LH Series	H-005
F2404 Series	H-005
F2405 Series	H-006
F2406 Series	H-007
F2408 Series	H-008
F2500 Series	H-008
F2501 Series	H-009
F2501-L Series	H-010
F2501-LL Series	H-010
F2501-LLL Series	H-011
F2502 Series	H-011
F2503 Series	H-012
F2601 Series	H-013
F2602 Series	H-013
F2603 Series	H-014
F2605 Series	H-014
F2606 Series	H-015
F2650 Series	H-015
F2700 Series	H-016
F2701 Series	H-016
F2702 Series	H-017
F2703 Series	H-017
F2706 Series	H-018
F4003 Series	H-018
F4004 Series	H-018
F6400-0 Series	H-019
F6400-L-0 Series	H-020
F6500 Series	H-020
F6502 Series	H-021
F6600 Series	H-021
F6602 Series	H-022
F6801-NWO Series	H-023
F6801 -L-NWO Series	H-024
F6801-LL-NWO Series	H-024
F6802-NWO Series	H-025
F6803-NWO Series	H-025
F6804-NWO Series	H-026

Terms of Payment:

Subject to credit approval and, unless otherwise specified, cash discount terms are 1% 10 Days, Net 30 Days.

Shipping:

All prices are F.O.B. Warehouse.

Returns:

Fittings may be returned only with the authorization of Brennan Industries, Inc., subject to our inspection and must be shipped freight-prepaid. A minimum handling charge of 20% will apply.
All returns must be clearly marked with the Return Goods Authorization number on the package and all paperwork.

Special Fittings:

Special fittings made to your specifications are not returnable.

Minimum Billing Charge:

All orders are subject to a $25.00 minimum billing charge per order.

Material:

All Brennan fittings and adapters are produced using high-quality Carbon Steel, 316 Stainless Steel and Brass and conform to the design requirements as specified in the Society of Automotive Engineers Section J514, J1453 and J518.

Note:

This catalog supersedes any previous catalog covering these prouducts.
Prices are subject to change without notice.

Disclaimer:

Brennan Industries, Inc. cannot be held responsible for omissions or typographical errors.

0-Ring Face Seal/Flat Face Fittings • Flareless Bite Type Fittings
Push-to-Connect Fittings • Tube Fittings & Adapters
Conversion Adapters • Metric Bite Type Fittings* NWD • Test Points
Hydraulic Flanges • Instrumentation Tube Fittings

BRENNAN Industries
The Logical Choice for Hydraulic Fittings and Adapters®

CORPORATE OFFICE
6701 Cochran Road • Solon, Ohio 44139 U.S.A.
Phone: 440.248.1880 • Toll Free: 888.331.1523
Fax: 440.248.7282 • www.brennaninc.com

ISO 9001

DISTRIBUTION CENTERS

California
11-A Goodyear
Irvine, California 92618
Phone(949)595-0901
Fax:(949)595-0933
Toll Free:1-800-942-5321

Georgia
5369 Penn Circle
Decatur, Georgia 30035
Phone:(770)981-8451
Fax:(770)987-0926
Toll Free:1-800-458-1988

Ohio
30205 Solon Road
Solon, Ohio 44139
Phone:(440)248-7088
Fax(440)248-9375
Toll Free:1-800-331-1523

Texas
1189 108th Street
Grand Prairie, Texas 75050
Phone:(972)988-8311
Fax(972)660-6638
Toll Free:1-800-443-9937

Washington
1516 45th Street E.
Sumner,Washington 98390
Phone:(253)826-2001
Fax(253)826-4884
Toll Free:1-800-445-7107

Copyright© 2008.Brennan Industries. Inc.

Mi FLUID POWER SOLUTIONS®

Find a location near you!

Mi Fluid Power Solutions

Looking for specialized solutions for fluid power operations? Talk to the experts at Mi Fluid Power Solutions for expertise related to hydraulic power units, gearbox, and cylinder repair.

To view locations, scan QR Code or go to: **qrco.de/bd4Ofp**

MORE CHOICES. **MORE** INVENTORY. **MORE** EXPERTISE.